communications physics

Article

https://doi.org/10.1038/s42005-024-01545-5

# Resonant fractional conductance through a 1D Wigner chain

Check for updates

Rose Davies [1,2], Igor V. Lerner [1] ✉ & Igor V. Yurkevich [2]

In recent experiments on conductance of one-dimensional (1D) channels in ultra-clean samples, a diverse set of plateaus were found at fractions of the quantum of conductance in zero magnetic field. We consider a discrete model of strongly interacting electrons in a clean 1D system where the current between weak tunneling contacts is carried by fractionally charged solutions. While in the spinless case conductance remains unaffected by the interaction, as is typical for the strongly interacting clean 1D systems, we demonstrate that in the spinful case the peak conductance takes fractional values that depend on the filling factor of the 1D channel.

Experiments on two-terminal conductance through one-dimensional (1D) systems contain many complex features despite the seeming simplicity of the reduced dimensionality. The most well-known of these, along with the standard geometric quantization[1] of conductance in units of $2e^2/h$, is the 0.7 plateau[2–4]. Recent experiments have discovered a surprising new feature in the conductance—additional plateaus occurring at fractional values of the conductance quantum at zero (or very small) magnetic field[5–7].

The conductance through the prototypical 1D system, a clean Luttinger Liquid, is unaffected by interactions within the system since it is dominated in the dc limit by the contacts to reservoirs[8–10]. It is only upon adding a scattering mechanism and more channels that fractional values of the conductance are expected[11,12]. While such phenomenologically introduced multi-particle backscattering was successfully utilized to reproduce one of the most prominent fractions of 2/5[11], the even-denominator fractions have not been explained yet.

Typical samples in experiments[5,6] are ultra-clean and relatively short so electron transport is ballistic. There is experimental evidence[13] of the formation of a zigzag Wigner crystal[14,15] in precisely the same materials where the fractional conductance has been later discovered[6].

In this work, we suggest a discrete model of a clean 1D material with a strong electron–electron interaction where fractional charges, which can lead to fractional conductance, arise due to the incommensurability of the Fermi wavelength and the effective lattice spacing. The fact that such a model results in the appearance of fractionally charged solitons[16] has been established by symmetry arguments in a seminal work by Goldstone and Wilczeck[17]. However, having fractional charges does not necessarily lead to the fractional quantization of conductance. We will show here that the latter arises only when additional channels, e.g. due to spin, are available to the electrons.

The solitons in question could arise due to the formation of the charge density wave (CDW) with a lattice constant incommensurate with the electron's Fermi wavelength. In all these experiments, 1D constrictions can hold only a few electrons and a few superlattice periods, which makes it imperative to build a finite-size model without going to the thermodynamic limit of the Luttinger liquid.

## Results and discussion

### Spinless case

We consider the Hamiltonian of $N$ electrons hopping on a lattice of $\ell$ sites with a next-neighbor repulsion:

$$H_0 = \sum_{x=1}^{\ell-1}\left[-t\left(c_x^\dagger c_{x+1} + c_{x+1}^\dagger c_x\right) + U n_x\, n_{x+1}\right]. \tag{1}$$

where $n_x = c_x^\dagger c_x$ is the on-site number operator. We assume the next-neighbor repulsion to be strong,

$$U \gg t, \tag{2}$$

which effectively projects out all states with two particles being on adjacent sites. The chain (1) is connected to the right and left reservoirs via the tunneling contacts with the couplings $\Gamma_{\mathrm{L,R}}$.

In this model, different fractional values of conductance might appear depending on the number of sites $\ell$, the number of electrons, and the gate voltage. For illustration, we restrict considerations to a simple scenario where the number of sites $\ell$ is odd (Choosing $\ell$ to even leads to similar results under an appropriate choice of the gate voltage. Note that the ratio $N/\ell$ plays a role similar to that of the filling factor in the quantum Hall effect.) and the gate voltage is such that the maximal number of states possible under condition (2), $\frac{1}{2}(\ell+1) \equiv N+1$, is

[1]School of Physics and Astronomy, University of Birmingham, Birmingham B15 2TT, UK. [2]School of Computer Science & Digital Technologies, Aston University, Birmingham B4 7ET, UK. ✉e-mail: i.v.lerner@bham.ac.uk

occupied making a string

$$S_{N+1} = \bullet \circ \bullet \circ \bullet \cdots \circ \bullet \tag{3}$$

of alternate $N+1$ occupied ($\bullet$) and $N$ empty ($\circ$) sites. Such a string corresponds to the ground state of the system with $(N+1)$ particles in the strong coupling limit. Note that one cannot expect universal fractions in the opposite, weak coupling limit[18,19], where conductance is not fractionalized. We consider the Hilbert subspace $\mathcal{H}_{N+1}$, where the high-energy states that contain adjacent occupied sites have been projected out under condition (2). In this subspace the ground state (3) is unique and we denote it as $|N+1\rangle$.

An important point is that under the same condition, the ground state energy $E_N$ of the system with $N$ particles can be very close to $E_{N+1}$ leading to the resonance conductance at low temperatures.

States with $N = \frac{1}{2}(\ell - 1)$ particles in the projected subspace $\mathcal{H}_N$, which are obtained from $|N+1\rangle$, Eq. (3), by removing an electron from an odd (occupied) site, are made of two strings like that in Eq. (3) separated by a triplet of empty sites. Such states can be represented as

$$|i, i; N\rangle \equiv |\otimes\ S_i \circ\circ\circ\ S_{N-i} \otimes\rangle, \quad i = 0, 1 \cdots N, \tag{4a}$$

where the $2m-1$-long strings $S_m$ contain $m$ electrons with alternating occupied and empty sites as defined in Eq. (3) for $m = N+1$. Here we represent left and right reservoirs attached to the chain as two additional sites at $x=0$ and $x=\ell+1$ depicted by crossed circles, which are never occupied by design. This is convenient to incorporate the states obtained from $|N+1\rangle$ by removal of one of the edge electrons. Assuming that a string $S_0$ is omitted together with an adjacent empty site (to keep the total number of sites unchanged), the boundary states are

$$\begin{aligned} |0, 0; N\rangle &= |\otimes\circ\circ\ S_N \otimes\rangle, \\ |N, N; N\rangle &= |\otimes\ S_N\ \circ\circ\otimes\rangle. \end{aligned} \tag{4b}$$

Formally, the states in Eq. (4) are obtained by acting with the annihilation operator $c_x$ on any occupied site in $|N+1\rangle$:

$$|i, i; N\rangle = c_x |N+1\rangle \delta_{x,2i+1}. \tag{5}$$

Further states in subspace $\mathcal{H}_N$, obtained by acting with the hopping part of Hamiltonian (1) on states (4), can be represented as configurations with two doublets of empty sites separating three strings,

$$|i, j; N\rangle = |\otimes\ S_i \circ\circ S_{j-i} \circ\circ S_{N-j} \otimes\rangle, \quad i<j, \tag{6a}$$

including states with the boundary doubles:

$$\begin{aligned} |0, j; N\rangle &= |\otimes\circ S_j \circ\circ S_{N-j} \otimes\rangle, \\ |j, j; N\rangle &= |\otimes\ S_j \circ\circ S_{N-j}\ \circ\otimes\rangle, \end{aligned} \tag{6b}$$

In the states of Eqs. (6), particles in strings separated by two empty sites occupy either only even or only odd sites. The occupancy, $n_x = 0$ or 1, of any site can be represented as $n_x = \frac{1}{2}(\cos(\pi x + \phi_x) + 1)$, with $\phi_x = 0$ for occupied even (or empty odd) sites and $\phi_x = \pi$ for occupied odd (or empty even) sites. Hence, an electron hopping by one site can be represented by the motion of the domain wall (kink) between 0 and $\pi$ phases by two sites as illustrated in Fig. 1. In the states of Eqs. (4), all electron-occupied odd sites and an electron hopping to an empty site is equivalent to the creation of kink–anti-kink pair.

As such pairs are created by removing a single electron from state $|N+1\rangle$, each kink carries the one-half electron charge, in agreement with the classical soliton picture of Goldstone and Wilczeck for polyacetylene[17]. In a model similar to that under consideration, the existence of such kinks has also been demonstrated numerically[20]. We will show that, by itself, such a fractional charge does not lead to fractional conductance.

The states in Eqs. (4) and (6), which are degenerate eigenstates of Hamiltonian $H_0$ in the absence of hopping, can be used as a basis for spanning any state $|\Psi_N\rangle$ in the projected subspace $\mathcal{H}_N$

$$|\Psi_N\rangle = \sum_{0\leqslant i\leqslant j\leqslant N} \psi_{i,j+1} |i, j; N\rangle. \tag{7}$$

To get the eigenvalue equation for $H_0$ within $\mathcal{H}_N$, one needs to keep only the hopping terms acting on the ends of the strings, which results in

$$\varepsilon\, \psi_{ij} = -t(\psi_{i+1,j} + \psi_{i-1,j} + \psi_{i,j+1} + \psi_{i,j-1}). \tag{8}$$

This equation describes two free fermions of charge $-\frac{1}{2}e$ with positions $i$ and $j+1$ on the fictitious lattice of length $N+1$, with one being on the left of the other, $i \leqslant j$. The constraints on the indices in Eq. (7), $0 \leqslant i \leqslant j \leqslant N$, can be accounted for by adding two boundary states, $i=-1$ and $j=N+1$, and imposing the boundary conditions

$$\psi_{-1,j} = \psi_{i,N+1} = \psi_{ii} = 0. \tag{9}$$

The solutions of Eq. (8) with the boundary conditions (9) are the Slater determinants of the standing waves

$$\psi_{ij}(q_1, q_2) = \varphi_i(q_1)\, \varphi_j(q_2) - \varphi_i(q_2)\, \varphi_j(q_1), \tag{10}$$

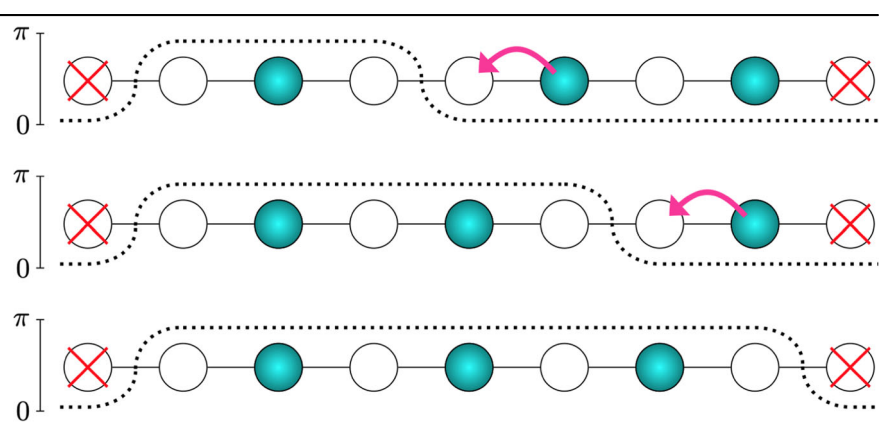


**Fig. 1 | An illustration of the kink propagation.** The one-electron hopping from state $|0, 1; 3\rangle$ to $|0, 2; 3\rangle$ to $|0, 3; 3\rangle$, Eq. (6b), is equivalent to the motion of the domain wall (kink), indicated by the dotted line.

where

$$\varphi_j(q) = \sqrt{\frac{2}{N+2}} \sin q(j+1), \quad q = \frac{\pi n}{N+2} \tag{11}$$

with $n = 1, 2, \cdots, N+1$. The corresponding eigenenergies are

$$\varepsilon(q_1, q_2) = -2t[\cos q_1 + \cos q_2]. \tag{12}$$

The ground state, which we call $|N\rangle$, is given by the lowest possible $q$, i.e.

$$q_1 = \frac{\pi}{N+2}, \qquad q_2 = \frac{2\pi}{N+2}, \tag{13}$$

and its energy is $E_N = \varepsilon(q_1, 2q_1)$. Note that it is separated from excited states by the gap of order $t/N$ so that our zero-temperature considerations should be valid for $T \lesssim t/N$.

We consider the current through the system in the linear response regime under the conditions when only the states with $N+1 = \frac{1}{2}(\ell+1)$ and $N = \frac{1}{2}(\ell-1)$ electrons in the chain are relevant as their ground state energies are close. Then only the ground states, $|N+1\rangle$ and $|N\rangle$, contribute to the dimensionless conductance, which in the case of spinless fermions can be written[21] as

$$g = -\int_{-\infty}^{\infty} d\varepsilon\, T(\varepsilon) f'(\varepsilon - \mu), \;\; T(\varepsilon) = 4\Gamma_{\rm L}\Gamma_{\rm R}|G_{1\ell}(\varepsilon)|^2, \tag{14}$$

where $f(\varepsilon-\mu)$ is the electron Fermi distribution function and $G_{1\ell}(\varepsilon)$ is the retarded Green's function describing the propagation of effective excitations with energy $\varepsilon$ across an open chain connected to the left, at $x = 1$, and right, at $x = \ell$, reservoirs via the tunneling contacts with the couplings $\Gamma_{\rm L,R}$.

We shall use the Dyson equation

$$G_{xx'} = \mathcal{G}_{xx'} + \sum_{\alpha=1,\ell} \mathcal{G}_{x\alpha}\, \Sigma_\alpha\, G_{\alpha x'}, \tag{15}$$

to relate $G_{1\ell}(\varepsilon)$ to Green's function $\mathcal{G}_{xx'}(\varepsilon)$ of the isolated chain. This equation for $G_{1\ell}$ is algebraic due to the locality of the self-energy: $\Sigma_1 = -i\Gamma_{\rm L}$, $\Sigma_\ell = -i\Gamma_{\rm R}$. Then Green's function for a particle propagating across the system is found to be

$$G_{1\ell} = \frac{\mathcal{G}_{1\ell}}{1 + i\mathcal{G}_{11}(\Gamma_{\rm L} + \Gamma_{\rm R}) + \Gamma_{\rm L}\Gamma_{\rm R}(\mathcal{G}_{1\ell}^2 - \mathcal{G}_{11}^2)}. \tag{16}$$

Green's function of the isolated chain, $\mathcal{G}_{x,x'}(\varepsilon)$, is calculated assuming infinitesimal coupling to the leads to ensure the thermal equilibrium. Keeping only the states $|N\rangle$ and $|N+1\rangle$, the retarded Green's function has a pole structure,

$$\begin{aligned} \mathcal{G}_{x,x'}(\varepsilon) &= \frac{\rho_N + \rho_{N+1}}{\omega + i0} \langle N|c_x|N+1\rangle \langle N+1|c_{x'}^\dagger|N\rangle, \\ \omega &\equiv \varepsilon - (E_N - E_{N+1}), \end{aligned} \tag{17}$$

where $\rho_N$ and $\rho_{N+1}$ are canonical partition functions.

As follows from Eq. (5), the only states with $N$ particles that contribute to $\langle N|c_x|N+1\rangle$ in Eq. (17) are $|i, i; N\rangle$, Eq. (4). Then we find from the expansion (7) that

$$\langle N+1|c_x^\dagger|N\rangle = \psi_{i,i+1}, \quad x = 2i+1. \tag{18}$$

Using the notations $x = 2i+1$, $x' = 2j+1$, we reduce the Green's function (17) to

$$\mathcal{G}_{xx'} = \frac{z_{i,j}}{\omega + i0}, z_{i,j} \equiv (\rho_N + \rho_{N+1})\psi_{i,i+1}\psi_{j,j+1}. \tag{19}$$

The transmission coefficient then acquires the Breit–Wigner–Fano resonance form,

$$T(\omega) = \frac{4\widetilde{\Gamma}_{\rm L}\widetilde{\Gamma}_{\rm R}\omega^2}{\left[\omega^2 - (1-s^2)\widetilde{\Gamma}_{\rm L}\widetilde{\Gamma}_{\rm R}\right]^2 + \widetilde{\Gamma}^2\,\omega^2}, \tag{20}$$

where the couplings to the reservoirs are renormalized by Green's functions residues,

$$\widetilde{\Gamma}_{\rm L,R} = z_{0,0}\,\Gamma_{\rm L,R}, \quad \widetilde{\Gamma} = \widetilde{\Gamma}_{\rm L} + \widetilde{\Gamma}_{\rm R}, \tag{21}$$

with $s = z_{0,N}/z_{0,0}$ being the ratio of the residues. Taking into account that $\varphi_{N+1} = \pm\varphi_0$ and $\varphi_N = \pm\varphi_1$, Eq. (11), the residues are equal to each other, i.e. $s = 1$. The transmission coefficient, therefore, turns into a standard Breit–Wigner formula

$$T(\omega) = \frac{4\widetilde{\Gamma}_{\rm L}\widetilde{\Gamma}_{\rm R}}{\omega^2 + \widetilde{\Gamma}^2}. \tag{22}$$

For $\Gamma_{\rm L} = \Gamma_{\rm R}$ this peaks at 1 at the resonance, $\omega \to 0$, leading to the universal value of conductance, $e^2/h$, unaffected by the fractional character of the quasiparticles (kinks) inside the wire. This is similar to the well-known result for the Luttinger liquid[8–10] where any internal interaction does not change, in the absence of backscattering, the universal conductance.

## Spinful case

The generalization of the model (1) to a spinful case drastically changes such a conclusion and results in fractional values of conductance. Similar to the Luttinger liquid model, the inclusion of the spin degrees of freedom in the model under consideration opens up an interaction channel not available in the spinless case. However, unlike the Luttinger liquid model there is no spin–charge separation in our setup. We show below that the addition of the spin degree of freedom suppresses the charge transport.

It turns out that in long constrictions the conductance $g$ would be exponentially suppressed but in short constrictions, relevant for the experiments where the non-magnetic fractional conductance was discovered[5,6], it takes fractional values that depend on the constriction length and filling factor.

To prove this claim, we generalize Hamiltonian (1) to include spin $\sigma = \uparrow, \downarrow$:

$$c_x \to c_{x,\sigma}, \quad c_x^\dagger \to c_{x,\sigma}^\dagger, \quad n_x = n_{x,\uparrow} + n_{x,\downarrow}. \tag{23}$$

Here we assume an infinite on-site repulsion (forbidden double occupancy). Each occupied state (•) in string (3) and in the strings in Eqs. (4) and (6) now acquire a spin index $\sigma$.

The spinful Green's function for an isolated chain, $\mathcal{G}_{x,x'}^{\sigma\sigma'}(\varepsilon)$, is calculated along the same route as the spinless one in Eqs. (17)–(19). Now each configuration of strings bears spin indices, which order cannot change as only the hopping part of $H_0$ affects the dynamics in the large-$U$ limit.

The spin degrees of freedom in Green's function $\mathcal{G}_{x,x'}^{\sigma\sigma'}(\varepsilon)$ impose strong restriction on the matrix element $\langle N|c_{x,\sigma}|N+1\rangle$ which should be substituted for $\langle N|c_x|N+1\rangle$ in Eq. (17): on top of the absence of the adjacent occupied states we should require that the spin configurations in $|N\rangle$ and $c_x|N+1\rangle$ are identical—otherwise, these two states are orthogonal as illustrated in Fig. 2.

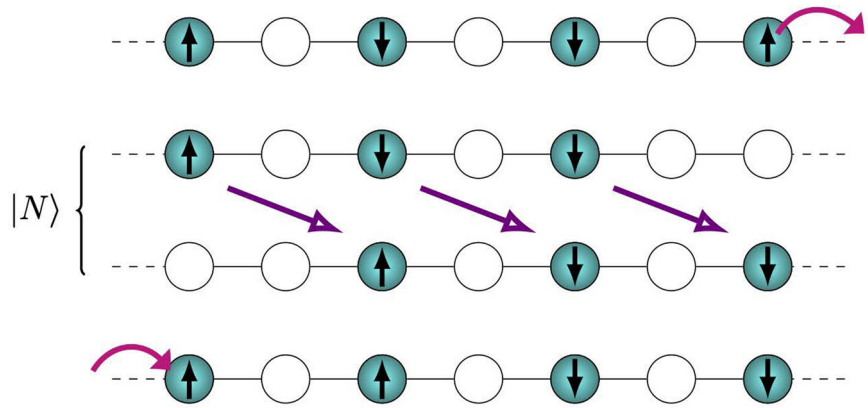


**Fig. 2 | Demonstrating the orthogonality of a spin configuration under the hopping process.** The dashed lines at either side of the chain represent the connection to the reservoirs.

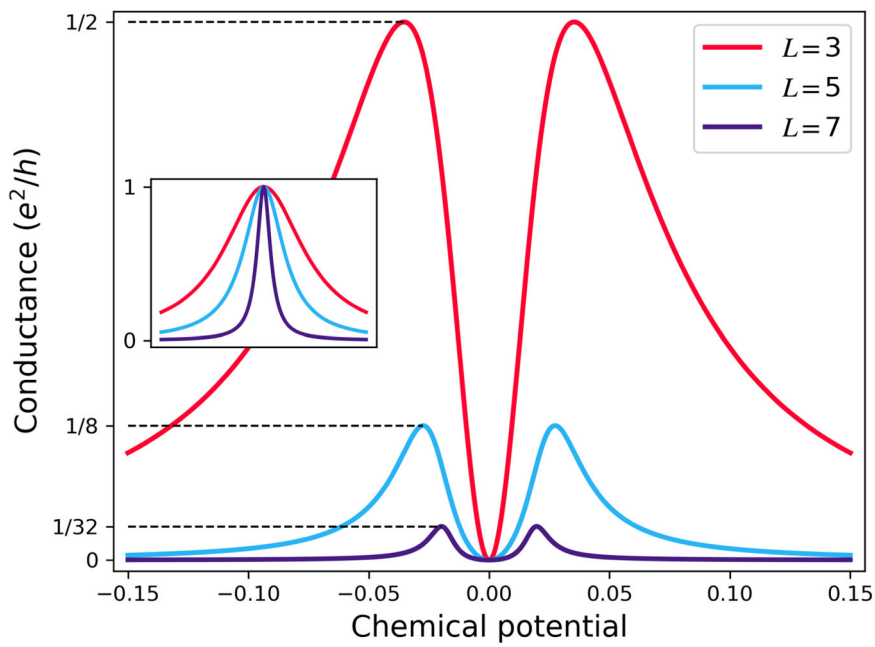


**Fig. 3 | A graph showing the peaks in the spinful conductance and their reduction as the length of the system is increased as only transitions that conserve spin configurations are permitted.** The energy has been set so that each length is plotted centered on its minimum energy. The inset shows the spinless conductance for the same lengths - displaying the expected Breit-Wigner peaks.

As directions of spins in each string are arbitrary, the relative number of non-orthogonal configurations exponentially decreases with the length of the chain. Calculating this number with relatively straightforward combinatorics results in the following expression for Green's function of an isolated chain in the spinful case, again using the notations $x = 2i + 1$, $x' = 2j + 1$:

$$\mathcal{G}^{\sigma\sigma'}_{xx'} = \frac{z_{i,j}}{\omega + i0} A^{\sigma}_{ij} \delta_{\sigma\sigma'} \equiv \mathcal{G}^{\sigma}_{xx'}, \tag{24}$$

where the spin factor is

$$A^{\sigma}_{i,j} = 2^{N+i-j-1}, \tag{25}$$

and the residues $z_{i,j}$ are given by Eq. (17). (Although $\rho_N$ and $\rho_{N+1}$ there include trace over spin configurations, it is not relevant for what follows).

The full Green's function $G_{1\ell}$, which enters expression (14) for conductance, is given by Eq. (16) where $\mathcal{G}^{\sigma}_{xx'} \equiv \mathcal{G}^{\sigma\sigma'}_{xx'} \delta_{\sigma\sigma'}$ is substituted for $\mathcal{G}_{xx'}$. To calculate the conductance, one needs only two components of it:

$$\mathcal{G}^{\sigma}_{11} = 2^{N-1} \mathcal{G}_{11}, \quad \mathcal{G}^{\sigma}_{1\ell} = \frac{1}{2} \mathcal{G}_{1\ell}. \tag{26}$$

Substituting this into Eq. (20) we find that $s = 2^{-N}$ there with an additional factor of 2 coming from the tracing over spin configurations, i.e. allowing for two spin channels. From this follows the main result: in the zero temperature limit, at the resonant condition for equal coupling, the peak value of the transmission

$$T_{\text{peak}} = 2^{-2N+1} \tag{27}$$

takes fractional values that should be observable in experiments on short constrictions.

Figure 3 displays the spinful conductance at different lengths of the chain. The suppression of the conductance is caused by the increase in the length of the system as the number of conducting spin configurations becomes a smaller part of the state space. This is in excellent correspondence to the experimental results on Germanium[5].

Recent experiments investigating the conductance of one-dimensional channels have unveiled a diverse range of plateaus occurring at fractions of the conductance quantum of in zero magnetic field. The adiabatic contacts in a clean interacting 1D system must guarantee insensitivity of the conductance to the microscopic details of the interaction. A similar result is anticipated for the tunneling contacts under the resonant conditions. Our research demonstrates that this is true for spin-polarized electrons, where the peak resonant conductance matches the conductance quantum.

However, in the case of spinful electrons experiencing strong electron-electron interaction, the peak conductance assumes fractional values dependent on the filling factor of the constriction and its length.

In conclusion, our electrostatic model which is applicable to a relatively short constriction, results in a universal fractional conductance that changes only with a chemical potential (gate voltage). The Luttinger-based description[11,12] results only in partial freezing of modes with inevitable fluctuations due to remaining gapless modes. Moreover, such a description can lead only to fractions with odd denominators, while our model gives the fraction $\frac{1}{2}$ for the particular value of chemical potential chosen to illustrate the concept.

## Methods

The derivation of the spinful Green's function for the isolated chain is expanded upon here. The spinful Hamiltonian is given by,

$$H_0 = \sum_{x=1}^{L-1}\left[-t\left(c^{\dagger}_{x,\sigma}c_{x+1,\sigma} + c^{\dagger}_{x+1,\sigma}c_{x,\sigma}\right) + Un_x\, n_{x+1}\right], \tag{28}$$

where $c_{x,\sigma,i}$ now annihilates an electron of spin $\sigma$ on site $x$ and $n_x$ is the total number electron operator $n_x = n_{x,\uparrow} + n_{x,\downarrow}$.

The basis in the projected subspace will now contain spin indices $\sigma = \{\uparrow, \downarrow\}$, with each string $S_m$ having $2^m$ spin configurations,

$$S_m = \sigma_1 \circ \sigma_2 \ldots \sigma_{m-1} \circ \sigma_m, \tag{29}$$

and the spin order cannot change during dynamical processes in the large-$U$ limit. The Green function of the isolated chain has extra degrees of freedom to trace out:

$$\mathcal{G}^{\sigma\sigma'}_{x,x'}(\omega) = \frac{\rho_N + \rho_{N+1}}{\omega + i0}\ \mathrm{tr}\langle N|c_{x,\sigma}|N+1\rangle\langle N+1|c^{\dagger}_{x',\sigma'}|N\rangle. \tag{30}$$

The trace is taken over all possible spin-configurations of both $N$- and $(N+1)$-particle states where $|N\rangle$, as in the main text, represents the ground state. The same trace is also present in $\rho_N$ and $\rho_{N+1}$ but does not play a role in our main result.

The Green's function can be calculated, like in the spinless case, using the constraint on the insertion of an extra particle into $N$-particle states. Writing this explicitly, using the notation $|N+1\rangle = |S_{N+1}\rangle$,

$$c^{\dagger}_{x,\sigma}|S_{N+1}\rangle = \psi_{i,i+1}\,|S_i \circ \sigma \circ S_{N-i}\rangle, \quad x = 2i+1. \tag{31}$$

As before, for $x = 2i+1, x' = 2j+1$, we find the Green function of an isolated chain containing spinful particles

$$\mathcal{G}^{\sigma\sigma'}_{xx'}(\omega) = \frac{\rho_N + \rho_{N+1}}{\omega + i0}\ \psi_{i,i+1}\psi_{j,j+1}\, B^{\sigma\sigma'}_{ij}, \tag{32}$$

where

$$B^{\sigma\sigma'}_{ij} = \mathrm{tr}\langle S_i \circ \sigma \circ S_{N-i}|S_{N+1}\rangle\langle S_{N+1}|S_j \circ \sigma' \circ S_{N-j}\rangle. \tag{33}$$

One can rearrange notations, using fusion rules $S_{n+m} = S_n \cdot S_m$ to write the expression above as

$$\langle S_i \circ \sigma \circ S_{j-i} \circ S_{N-j}|S_{N+1}\rangle\langle S_{N+1}|S_i \circ S_{j-i} \circ \sigma' \circ S_{N-j}\rangle. \tag{34}$$

The result is non-zero only if the following two spin configurations are equal: $\sigma \circ S_{j-i} = S_{j-i} \circ \sigma'$. This equation is only satisfied when $\sigma = \sigma'$ and the configuration $S_{j-i}$ has all spins $\sigma$. Therefore, the only spin configurations of the $(N+1)$-particle state that are not orthogonal to both vectors are

$$|S_{N+1}\rangle = |S_i \circ \sigma \circ \sigma \ldots \sigma \circ \sigma \circ S_{N-j-1}\rangle \tag{35}$$

and there are $2^{N+i-J-1}$ combinations. Finally, we find

$$B^{\sigma\sigma'}_{ij} = \delta_{\sigma\sigma'}\, 2^{N+i-j-1}. \tag{36}$$

This brings us to Eq. (24) for the isolated Green's function, from which using the $\mathcal{G}^{\sigma\sigma}_{11}, \mathcal{G}^{\sigma\sigma}_{1N}$ components of the isolated function gives the full Green's function and therefore the conductance.

## Data availability

The authors declare that the data supporting the findings of this study are available within the paper.

Received: 21 November 2023; Accepted: 2 February 2024;
Published online: 28 February 2024

## References

1. Imry, Y. *Introduction to Mesoscopic Physics* 2nd edn. (Oxford University Press, Oxford, 2008).
2. Thomas, K. J. et al. Possible spin polarization in a one-dimensional electron gas. *Phys. Rev. Lett.* **77**, 135 (1996).
3. Cronenwett, S. M. et al. Low-temperature fate of the 0.7 structure in a point contact: a Kondo-like correlated state in an open system. *Phys. Rev. Lett.* **88**, 226805 (2002).
4. Micolich, A. P. What lurks below the last plateau: experimental studies of the 0.7 × $2e^2/h$ conductance anomaly in one-dimensional systems. *J. Phys.-Condens. Mater.* **23**, 443201 (2011).
5. Gul, Y., Holmes, S. N., Myronov, M., Kumar, S. & Pepper, M. Self-organised fractional quantisation in a hole quantum wire. *J. Phys.-Condens. Mater.* **30**, 09LT01 (2018).
6. Kumar, S. et al. Zero-magnetic field fractional quantum states. *Phys. Rev. Lett.* **122**, 086803 (2019).
7. Strunz, J. et al. Interacting topological edge channels. *Nat. Phys.* **16**, 83 (2020).
8. Maslov, D. L. & Stone, M. Landauer conductance of Luttinger liquids with leads. *Phys. Rev. B* **52**, R5539 (1995).
9. Ponomarenko, V. Renormalization of the one-dimensional conductance in the Luttinger-liquid model. *Phys. Rev. B* **52**, R8666 (1995).
10. Safi, I. & Schulz, H. Transport in an inhomogeneous interacting one-dimensional system. *Phys. Rev. B* **52**, R17040 (1995).
11. Shavit, G. & Oreg, Y. Fractional conductance in strongly interacting 1D systems. *Phys. Rev. Lett.* **123**, 036803 (2019).
12. Aseev, P. P., Loss, D. & Klinovaja, J. Conductance of fractional Luttinger liquids at finite temperatures. *Phys. Rev. B* **98**, 045416 (2018).
13. Hew, W. K. et al. Incipient formation of an electron lattice in a weakly confined quantum wire. *Phys. Rev. Lett.* **102**, 056804 (2009).
14. Klironomos, A. D., Meyer, J. S., Hikihara, T. & Matveev, K. A. Spin coupling in zigzag Wigner crystals. *Phys. Rev. B* **76**, 075302 (2007).
15. Meyer, J. S. & Matveev, K. A. Wigner crystal physics in quantum wires. *J. Phys.-Condens. Mat.* **21**, 023203 (2008).
16. Hubbard, J. Generalized Wigner lattices in one dimension and some applications to TCNQ salts. *Phys. Rev. B* **17**, 494 (1978).
17. Goldstone, J. & Wilczek, F. Fractional quantum numbers on solitons. *Phys. Rev. Lett.* **47**, 986 (1981).
18. Sedlmayr, N., Ohst, J., Affleck, I., Sirker, J. & Eggert, S. Transport and scattering in inhomogeneous quantum wires. *Phys. Rev. B* **86**, 121302 (2012).
19. He, Y., Kennes, D. M. & Meden, V. Conductance of correlated many-fermion systems from charge fluctuations. *Phys. Rev. B* **105**, 165120 (2022).
20. Weiss, Y., Goldstein, M. & Berkovits, R. Finite doping of a one-dimensional charge density wave: solitons vs. Luttinger liquid charge density. *Phys. Rev. B* **77**, 205128 (2008).

21. Meir, Y. & Wingreen, N. S. Landauer formula for the current through an interacting electron region. *Phys. Rev. Lett.* **68**, 2512 (1992).

## Acknowledgements
We gratefully acknowledge support from EPSRC under the grant EP/R029075/1 (I.V.L.) and from the Leverhulme Trust under the grant RPG-2019-317 (I.V.Y.).

## Author contributions
I.V.L. has conceived the project. I.V.Y. and R.D. have performed the calculations. All authors discussed the results and wrote the manuscript.

## Competing interests
The authors declare no competing interests.

## Additional information
**Supplementary information** The online version contains supplementary material available at https://doi.org/10.1038/s42005-024-01545-5.

**Correspondence** and requests for materials should be addressed to Igor V. Lerner.

**Peer review information** *Communications Physics* thanks the anonymous reviewers for their contribution to the peer review of this work. A peer review file is available.

**Reprints and permissions information** is available at http://www.nature.com/reprints

**Publisher's note** Springer Nature remains neutral with regard to jurisdictional claims in published maps and institutional affiliations.

**Open Access** This article is licensed under a Creative Commons Attribution 4.0 International License, which permits use, sharing, adaptation, distribution and reproduction in any medium or format, as long as you give appropriate credit to the original author(s) and the source, provide a link to the Creative Commons licence, and indicate if changes were made. The images or other third party material in this article are included in the article's Creative Commons licence, unless indicated otherwise in a credit line to the material. If material is not included in the article's Creative Commons licence and your intended use is not permitted by statutory regulation or exceeds the permitted use, you will need to obtain permission directly from the copyright holder. To view a copy of this licence, visit http://creativecommons.org/licenses/by/4.0/.

© The Author(s) 2024