UNIVERSITY OF ASTON IN BIRMINGHAM

Department of Physics

CHARACTER RECOGNITION SYSTEMS USING FOURIER TRANSFORMATION IN INCOHERENT LIGHT

by

Noël William Frank Stephens

Thesis submitted for the degree of Doctor of Philosophy

October 1971

ABSTRACT

Many attempts have been made to overcome problems involved in character recognition which have resulted in the manufacture of character reading machines.

An investigation into a new approach to character recognition is described. Features for recognition are Fourier coefficients. These are generated optically by convolving characters with periodic gratings. The development of hardware to enable automatic measurement of contrast and position of periodic shadows produced by the convolution is described.

Fourier coefficients of character sets were measured, many of which are tabulated. Their analysis revealed that a few low frequency sampling points could be selected to recognise sets of numerals. Limited treatment is given to show the effect of type face variations on the values of coefficients which culminated in the location of six sampling frequencies used as features to recognise numerals in two type fonts.

Finally, the construction of two character recognition machines is compared and contrasted. The first is a pilot plant based on a test bed optical Fourier analyser, while the second is a more streamlined machine designed for high speed reading. Reasons to indicate that the latter machine would be the most suitable to adapt for industrial and commercial applications are discussed.

TABLE OF CONTENTS

Page

CHAPTER 1 INTRODUCTION TO CHARACTER RECOGNITION

A SURVEY OF CHARACTER RECOGNITION SYSTEMS

CHAPTER 2 FOURIER TRANSFORMATION THEORY

CHAPTER 3 PRINCIPAL DEVELOPMENT OF EXPERIMENTAL WORK

Page

CHAPTER 3 - continued

CHAPTER 4 INFORMATION PROCESSING

CHAPTER 5 RESULTS AND THEIR INTERPRETATION

Page

CHAPTER 5 - continued

CHAPTER 6 STATIC SCANNING

I - FOUR POINT SAMPLING: THE QUADRANT GRID

II - THREE POINT SAMPLING: THE TRIPLE GRID

CHAPTER 9 - continued

APPENDICES

CHAPTER 1

INTRODUCTION TO CHARACTER RECOGNITION

1.1 Pattern Recognition

Most people take for granted their ability to read. Man's ability to read not only plays an important part in the lives of individuals but is essential today for administration in government, industry, commerce and social services such as schools and hospitals. Whether we read the daily newspaper, a book or the number on a bus, the brain has a formidable task of identifying symbols (comprising words and numbers) which occur in all shapes, sizes and styles, often distorted or obscured by smudges or blurred by ink.

The processes performed by the brain not only result in the identification of letters and numerals for the purpose of reading, but also include the broader task of identifying and classifying different shapes, objects, sounds and situations perceived in the outside world. These processes are known by scientists as pattern recognition. Psychological aspects of pattern recognition are discussed by Corcoran[1(a)].

Little is known about how the brain functions or what brain processes are involved in performing pattern recognition. Some basic theory of a statistical nature has been established for pattern classification which is independent of actual physical processes. An introduction to the ideas involved in this theory is provided by Casey and Nagy[1(b)]. These ideas are briefly outlined later in this chapter.

Symbols which enable a language to be written are alphabetic characters and are a very special class of patterns. They are devised by man and have evolved to be readily recognisable by man, but are said to be irrational characters as they are not based on the most economical use of information. An example of a rational alphabet is illustrated in Fig. 1.1. It consists of five binary digits in the form of squares located in positions within the 3 x 3 format shown in the top left corner of Fig. 1.1. It is a rational alphabet because the information carrying capacity of five binary digits is the theoretical minimum required to define a set of 26 letters in a binary system. The square labelled L in the 3 x 3 format remains black for every letter and is merely a position reference.

1.2 Role of Character Recognition

Characters are powerful and important tools used by humans as a communication medium. This form of communication is essential in a modern society and has acquired a new dimension with the advent of computers. Computer technology is rapidly advancing resulting in production of faster and more complex computers to meet the ever increasing demand and applications. Most applications of computers come under the headings:-

(a) Mathematical computation
(b) Accounting and invoicing
(c) Production and machine control
(d) Simulation (analogue and digital)

Man's desire to communicate faster and more efficiently with computers has stimulated large scale research into character recognition which previously had minority application in fields such as transcribing literature into Braile to aid the blind. One of the earliest character readers was constructed by Fournier D'Albe[2] in 1912 when he employed photo-sensitive devices in reading aids for the blind.

Conventional methods of feeding information or data into computers involves translation into a binary code, the language of digital computers. This is a recognised "bottle-neck" since an operator is required to transcribe information presented in terms of characters or symbols familiar to our language, into holes in cards or paper tape, before it is acceptable to the computer. A machine capable of doing this automatically is a character recognition machine or a character reading machine. A high speed

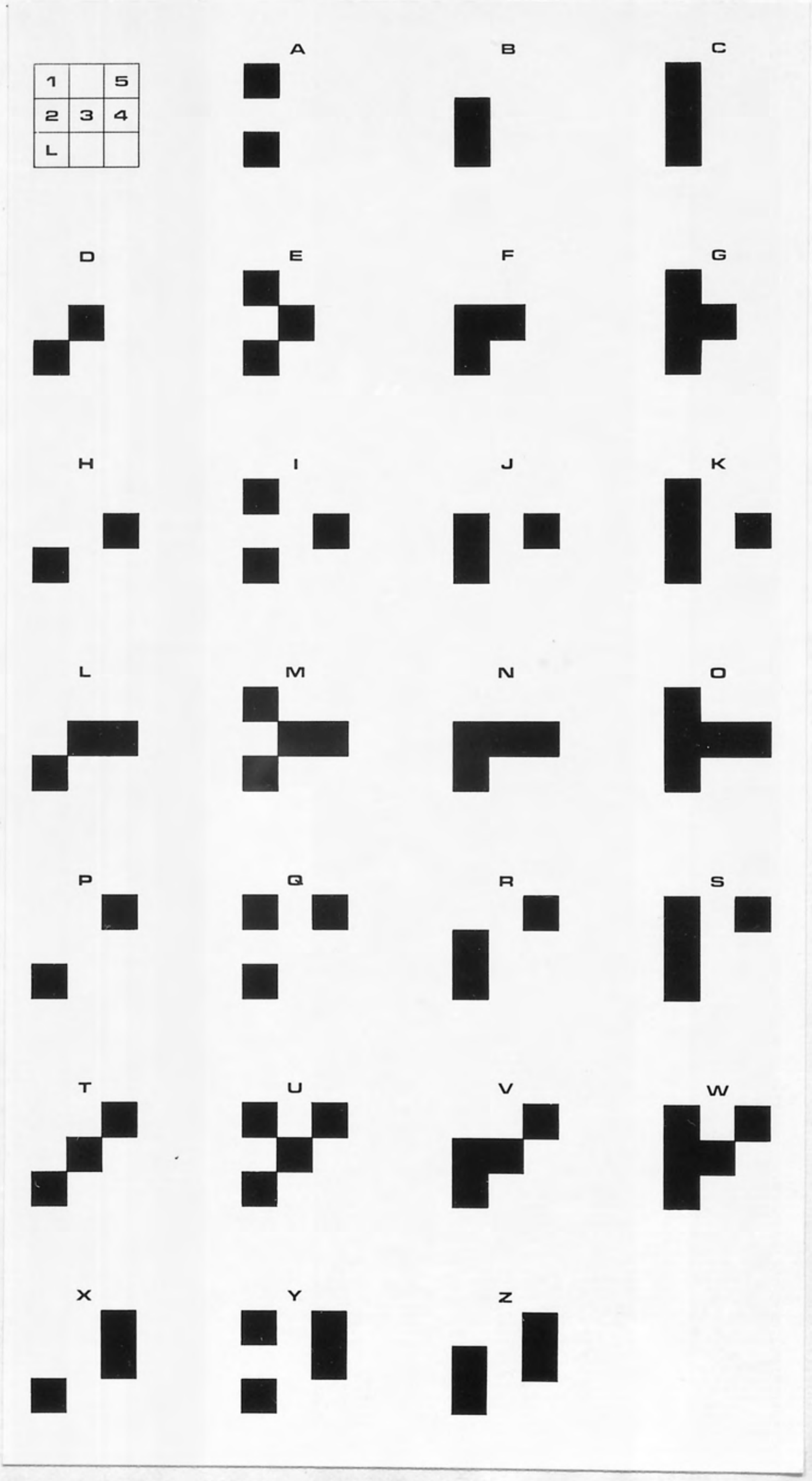

Fig. 1.1 Rational alphabet

reading machine could feed information directly into a computer without it being punched out on cards or tape.

Character recognition machines have important applications in postal sorting and many other routine document sorting applications.

Before discussing character recognition further some formal definitions of terms follow.

1.3 Definitions

1. Character. A character is a distinct member of a defined set of patterns, normally expressed in black on white or vice versa with no intermediate greys.

2. Alphabet. An alphabet is a finite set of characters. The definition of a character implies a fixed style or type font of perfect form and is only an idealised situation.

3. Character recognition.

   (i) Identification of a string of characters known a priori as belonging to a particular alphabet.

   (ii) The conversion into code of any well known set of patterns commonly used for human communication.

4. Pattern. A pattern is a distribution of light and shade occuring in a context containing an indefinitely large number of possible patterns, not all of which are known a priori.

5. Pattern recognition. Pattern recognition is essentially a pattern classification process. Patterns are grouped into classes of similar patterns often on the basis of a training set of patterns.

6. Information. Information is a measure of one's freedom of choice in selecting a message and is defined as the logarithm of the number of available choices. It is convenient to use logs. to the base 2, to conform with the language of digital computers, for which the unit of information is called a binary digit or "bit" of information first

suggested by John W. Tukey. A full explanation of information is covered by Shannon and Weaver[3].

7. Redundancy. Extent to which primary detecting systems collect information in excess of that logically required to distinguish between all pairs of characters in an alphabet.

$$\text{Redundancy} = 1 - \frac{\text{Minimum number of bits required}}{\text{Total number of bits available or collected}}$$

It is sometimes defined by the ratio:

$$\frac{\text{Number of bits collected}}{\text{Number of bits required}}$$

in primary detecting systems.

Redundancy of information in characters can be illustrated by forming them on an array of squares whose elements are black or white. Fig. 1.2 shows characters 5 and K from an alpha-numeric set, displayed in this way on a 6 x 10 array of squares. The array provides 60 bits of information, or by definition of information, there are 2^{60} possible choices of pattern configurations. Information, however, conveyed by an alpha-numeric set of characters is contained in 6 bits. The redundancy of this communication channel used in this mode is therefore:-

$$(1 - \frac{6}{60}) \times 100 = 90\%$$

This contrasts with a rational alphabet, consisting of bits in the form of squares, whose capacity is completely utilised.

8. Noise. Noise is unwanted extraneous information added to the signal so as to impair or obliterate a message in a channel by an amount depending on the extent to which the noise is present. It is possible to subtract noise from a message if its exact form is known. Redundancy in a communication channel provides a means of combatting noise. This is explained in classic papers by Shannon and Weaver[3].

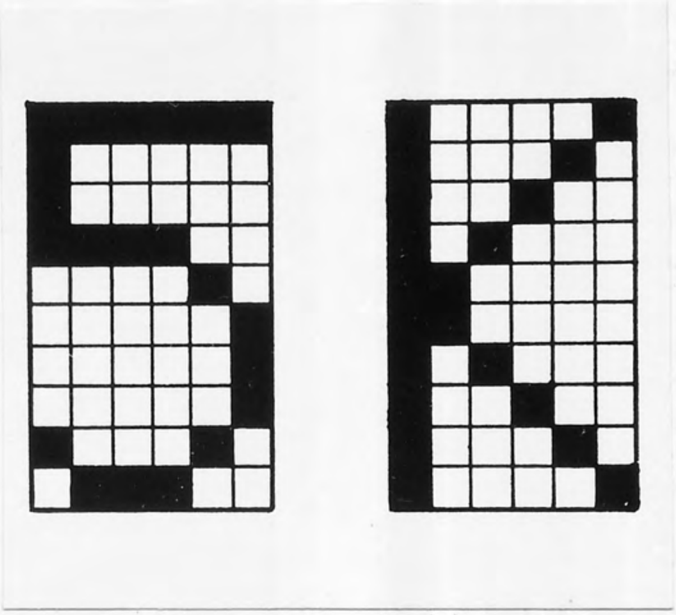

Fig. 1.2 Characters 5 and K formed on a 6 x 10 square array to illustrate redundancy

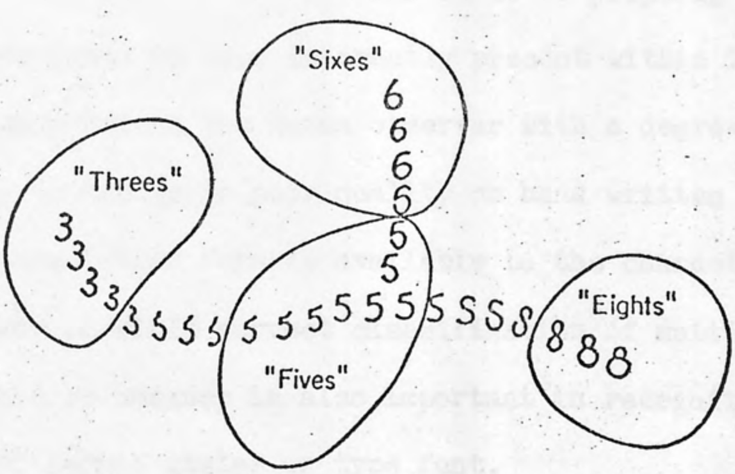

Fig. 1.3 The concept of character distributions in feature space

1.4 Information Considerations in Character Recognition

In real life situations, characters are more akin to patterns since they are neither of fixed style nor perfect in form as implied by their definition. In practice characters appear in hundreds of different styles and type font often distorted, broken or buried in noise by the printing process. A pattern recognition machine would recognise these characters by classifying them correctly.

An important aspect of visual pattern recognition performed by the brain (the eyes collect primary information) is past experience. From the point of view of conveying information, however, this is not the whole story. A person may be capable of reading poor quality printed text without difficulty because of redundancy built into a language. This redundancy is utilised by the brain on the basis of past experience to combat errors. The situation becomes somewhat different when that person is asked to read numerical data of the same print quality. Here there is no language redundancy, so each individual number must be correctly identified if the information is to be properly conveyed. Information redundancy is also inherently present within individual characters which provides the human observer with a degree of latitude when attempting to recognise poor quality or hand written characters. Redundancy in this latter form is available to the character recognition machine and makes possible correct classification of mutilated or noisy characters. This redundancy is also important in recognition of characters reproduced in different styles or type font.

A character recognition machine is concerned with extracting that information from characters which is useful in communicating a message. Printed characters contain masses of information most of which are purely redundant. It is the role of the character recognition machine to select that information relevant to recognition including some redundant information, so as to provide an output containing the absolute minimum information for which characters are used for conveyance. An increase in excess of 3 bits would convey the numerals 0 - 9; 4 bits are required in practice.

1.5 Features

The dilemma facing the designer of a character recognition machine is manifest in the question: What are those elusive qualities present in all possible shapes constituting say a 2? Parkes and Bell[4] ask: What is the 2-ness of a 2? These sort of questions led pioneers in the field to the concept of "features". Pattern recognition theory assists in the design of a pattern classifier which is ultimately realised in terms of hardware. The theory, however, tacitly assumes the information about patterns to be available in the form of "features". Ideally features are obtained by selecting minimal information in a way such as to render effective classification. There is no formula for determining best features and most people working in this field have their own preferences. The choice of features is often an intuitive one and is usually influenced by the requirements of a machine and the physical means available for feature extraction. Simplification of the problem of choosing features is provided by Ullmann[5].

Feature extraction is nearly always accompanied by a reduction or filtering out of information. Obvious features in characters are: vertical and horizontal strokes; joins or junctions; angles and curves, but they are not always the most accessible. Features can be derived using specially designed sampling masks. A mask might consist of slits arranged in various positions and orientations or an array of peepholes having a preset configuration. A set of vectors obtained by curve following (performed by scanning) can be used as features. A well known and proven technique uses n-tuples as features which are effectively weighted point samples. N-tuples are used as features in the cyclops machines developed at the N.P.L., described by Parkes and Bell[4]. Early work on n-tuples is described by Bledsoe and Browning[6]. Other feature extraction techniques include correlation by optical or electronic means, and Fourier transform sampling.

1.6 Basic Ideas in Pattern Recognition Theory

Although pattern recognition theory has been developed to deal with patterns in general, it has direct application to the problem of character recognition. The treatment of pattern recognition found in text books is often exemplified using characters.

Pattern recognition theory essentially provides a means of processing features in order to classify patterns. Each independent feature is assigned a dimension in feature space in which distributions of different patterns are assembled. Pattern distributions of characters, that is, distributions given by the chance of a particular shaped character occuring, tend to form ellipsoidally shaped clusters, in feature space or hyper-ellipsoidal clusters in feature space whose dimensions exceed 3. The shape of the character represented by the densest part of the cluster is generally referred to as an archetype or prototype character (this idea is illustrated in Fig. 1.3). Surfaces constructed in feature space in an attempt to isolate classes of patterns are called decision surfaces. It is convenient to define decision surfaces implicitly by discrimination functions as shown by Nilsson[7].

Discriminant functions can define straight lines, planes or hyper-planes according to the number of dimensions in feature space; or they may define more complicated surfaces if classification cannot be achieved otherwise. A pattern classifier must determine parameters defining decision surfaces. There are a number of approaches to this problem described by Nilsson[7], Arkadev[8] and Kovalevsky[9] but more often than not, the simplest methods are chosen when implementing in terms of hardware. The simplest form of hardware is a linear machine consisting of dichotomizers which define decision surfaces between character types. A dichotimizer is a two state or threshold device. Weights in a network are parameters of the decision surface whose values effectively determine a threshold value. The values of the weights are either calculated and preset on the basis of information known a priori about features of a given alphabet, or they can be set crudely and then optimised using a training set of characters. The electronic realisation of a threshold device is either a Schmitt trigger or a comparator. Comparators are more flexible with a differential input mode.

A system of deriving decision surfaces was proposed by Russian research workers based on electric potential field theory, described by Arkadev[8], Mason and McFall[10]. It constitutes a form of analogue computer used to simulate a learning process. Members of a training set assigned either positive or negative electro-static charges, modify the potential field within a feature space on being introduced into it. Equipotential surfaces then become decision surfaces.

Pattern recognition theory is concerned with pattern classification and assumes features to be available. A major part of a character recognition machine is concerned with feature extraction and usually comes under the heading of pre-processing. A character recognition machine must also have sensors or detectors which have the role of collecting primary information (not necessarily directly). The essential layers may thus be summarised in block diagram form shown in Fig. 1.4.

In some cases the pre-processor can precede the sensors such as in machines which pre-process information optically. The block diagram form is an over-simplification and gives no indication as to the number of processing stages. Stage analysis is sometimes preferred and affords a convenient means of breaking down processes involved in more complex character recognition machines. In this context a stage is defined broadly by Holt[11] as consisting of:-

1. An image (optical, magnetic or electrical);
2. One or more operations performed on that image;
3. A decision.

In this type of work, a decision is normally made electronically with threshold elements and is always accompanied by rejection of information.

Fig. 14

A SURVEY OF CHARACTER RECOGNITION SYSTEMS

1.7 Introduction

Associated with the design of a character recognition machine are many peripheral problems which deserve some mention. They include: handling documents; location of characters on documents; detection of: spaces between words, ends of lines, ends of pages. Problems of this nature are dealt with by Wilson[12] and the British Computer Society[13]. Particular attention to engineering considerations is given by Nadler[14].

1.7.1 Documents

An essential feature of any reading machine is a mechanism for transporting documents. Documents vary considerably in shape and form and in the nature and volume of information they carry. In general a character reading machine requires: an input hopper, a means of transporting documents rapidly to the location where the characters are sensed, and a number of output hoppers for automatic filing.

Important document types can be approximately classified under the headings:-

Envelopes;
Rolls;
Cheques;
Pages;
Microfilm.

Envelopes: Handling of this type of document is almost solely the concern of the Post Office. A machine dealing with envelopes is required to recognise type written and possibly hand printed numeric characters for the purpose of sorting mail.

Rolls: Type printed characters on paper in the form of a roll is peculiar to a large variety of machines in current use including: cash registers, adding machines, desk calculators and teleprinters. A machine that reads rolls would doubtless utilise the equally spaced line by line print out on these documents by presenting characters to the reading head a line at a time.

Cheques: These take the form of rectangular slips of paper containing one or two lines of characters, normally numeric, in a standard format. Cheques are used for money transactions via banks, work slips and material check-out slips in factories. They are found generally where data is generated centrally (by computer) and are read to inform the computer of a performance of a transaction or an operation.

Pages: This is a broad catagory of documents covering type written pages, printed pages of books and journals, invoices and pages of hand writing. They bear many kinds of text and styles of characters. Reading this class of document by machine is very demanding since a multifont, alpha-numeric reading machine is often required.

Microfilm: This form of document is used for storing records and automatic documentation. It lends itself well for reading using optical reading techniques in which the input is required in transparency form.

1.7.2 Consideration of Primary Information Collection

The interface between the document and the machine is the sensors or the machine's "eye". It is perhaps the most critical stage of a character recognition machine since the machine relies on it to collect information accurately and properly in order that the correct decisions are ultimately made. Certain inherent parameters exist for all systems of detection, which are important and require special attention in the design of character reading machines. These parameters can be listed as:-

Resolution)
Noise)
Fidelity) Reliability
Response time)

Resolution relates to the quantity of information collected and is normally kept as low as possible in reading machines. Magnetic ink character readers have low resolution reading heads, but the characters must be highly stylised and accurately printed. A general page reader capable of reading imperfect multifont alphanumeric characters needs to collect far more primary information and consequently a much higher resolution detecting means is required.

There are basically two forms of noise: source noise which includes imperfections in characters, ink smudges and paper grain and classical noise originating from the motion of electrons in the photo-receptors.

Fidelity is the faithfulness to which the image could be reconstructed in a store or on a display screen, from the electrical signal. It is directly related to noise and resolution of the detecting means.

Response time of the detecting means places an upper limit on the reading speed of a machine. In practice however, the reading speed is usually restricted by the document transporting mechanism. Response time is dependent largely on the method of detection, for example by: the after-glow of the phosphor on the CRT of a flying spot scanner; the screen response time of a vidicon scanner; or the response time of photo-diodes in a detector array.

Reliability is closely linked with the basic parameters and can be regarded as the degree to which they remain stable.

1.8 Classification of Character Recognition Machines by their Mode of Primary Information Collection

A survey is presented by classifying character recognition machines according to the classification scheme:

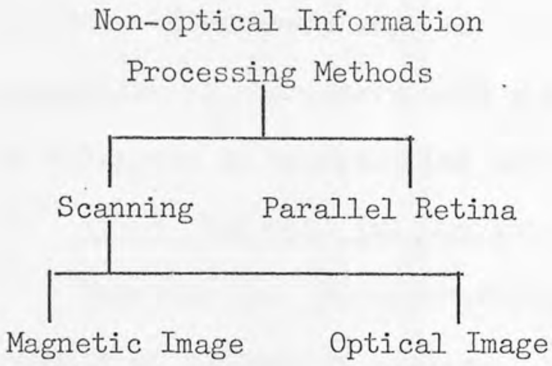

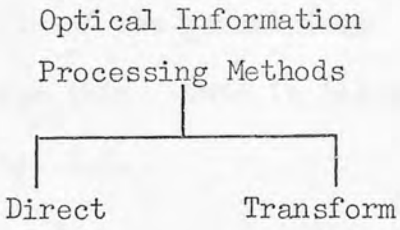

Optical information processing implies that an optical operation is deliberately performed on the image before conversion into an electrical signal. Non-optical processing systems essentially collect and retain topographically as much of the original information as possible within the capabilities of the detection system, with a view to performing pre-processing by electronic means. There are a few exceptions such as magnetic ink scanners and other types of slit scanners.

1.9 Systems Without Optical Information Processing

1.9.1 Scanning Techniques

The principal scanning techniques commonly used for collecting primary information in both experimental and commercial character reading machines are:-

(i) Slit Scanners;
(ii) Divided Slit or Columnar Array;
(iii) Mechanical Scanners;
(iv) Flying Spot and Vidicon Scanners;
(v) Retinal Arrays.

1.9.2 Slit Scanners

Vertical resolution of characters is completely lost using a single slit scanner. The general philosophy is to generate a "video" signal by moving a tall character sensitive strip, horizontally, at uniform velocity, relative to a line of printed characters. The signal induced in the strip detector effectively maps the intensity profile of the geometrical projection of characters onto a horizontal base line. This is illustrated by reference to magnetic ink characters in Fig. 1.5.

1.9.3 Magnetic Ink Character Readers

Magnetic ink character readers, MICR, were developed for the automatic reading of numbers on cheques. Specially designed characters are printed in ink loaded with magnetised particles. The characters are detected when they move horizontally at uniform velocity relative to a magnetic pickup head, in which an electrical signal is generated. Since there is no vertical resolution, two dimensional characters are condensed into a one dimensional time varying signal. For this reason, the characters are styled specially for recognition by the machine, with little regard for human recognition. There are two important styles of type used in the MICR system. E13B designed originally by the American Bankers' Association in 1958 and CMC7 devised by the Compagnie Des Machines Bull of France. The principal difference between the two is that one induces an analogue signal and the other a digital signal. These are illustrated in Fig. 1.5.

The disadvantages of MICR systems are that the characters must be printed with a high degree of accuracy within fine tolerances of print quality and positioning. There is, however, a degree of vertical translational invariance if the slit is extended a small distance above and below the characters. Another disadvantage is the severe limitation on application. Obviously only documents printed with magnetic ink can possibly be read. Application is hence restricted to the reading of bank cheques and documents that can be pre-printed in magnetic ink.

1.9.4 Optical Slit Methods

These methods as in all other document reading machines, with the exception of MICR, rely on light emitted from the document, usually by reflection, in order that characters may be detected. Scanning is very

Fig. 1·5 Slit Scan

(From Character Recognition 1967)

similar to MICR and collects the same sort of information by sampling characters continuously in vertical strips. There are two basic systems for doing this. Either; an image of a line of characters travel at uniform velocity relative to and across a vertical aperture slit. A photo-detector collects all the light transmitted by the slit. Or; the print is sampled in lines by projecting a uniformly illuminated vertical strip of light onto the page. The strip scans a line at a time by traversing the page horizontally. A photo-detector collects the total amount of light reflected back from the document at any instant. Both systems yield a signal representing a one dimensional vertical projection of characters as in the MICR system. Only horizontal detail is retrieved.

A specially designed type font is not essential, but if one is not used only a restricted number of different characters will be recognised because of the low resolution of this mode of scanning. The method is not favoured in commercial machines because of the restricted alphabet and low tolerance to distorted or noisy characters.

1.9.5 Divided Slit or Columnar Array

The divided slit, columnar array, or linear array functions in a similar way to the single slit, but provides a degree of vertical resolution depending on the number of vertical detector elements in the column. The number of elements in the column are typically between 10 and 30.

The concept provides more scope in the way the signals may be processed for obtaining features, for example, using the system described by Hammans[15]. The horizontal scanning axis is generated either using a rotating deflecting mirror, in which case the print must be imaged or by transporting the document on a carriage. The detectors in the column may be either rapidly scanned compared to the horizontal scan rate or supply information in parallel. The shape of scanned characters may be built up in shift registers after normalisation and digitisation prior to feature extraction. Such a system is described in chapter 8. Normalisation effectively standardises signals derived from characters so as to be independent of such factors as illumination intensity, contrast variations, character stroke thickness. Normalisation is dealt with later under "standard processing of video signals", and in chapter 7.

1.9.6 Mechanical Scanning

Mechanical scanning methods have been in existence longer than any other system of scanning and dates back to 1884 when Nipkow invented the celebrated rotating disc scanner. Up until around 1950, the important application of mechanical scanners was in devices for aiding blind people. A review of scanners used in this application is given by Davis [16]. With the advent of computers and high speed data handling techniques, mechanical scanners for many applications have been rendered inadequate because of their restricted speed at which they can operate.. A commercial machine with a mechanical scanner is described by Greanias[17].

Many bizarre designs of mechanical scanners evolved for blind aids. There are two important ones which serve to illustrate basic ideas behind many such scanners described here.

1.9.7 Nipkow's Disc Scanner

Fig. 1.6 illustrates the salient features of the Nipkow disc scanner. A character is brightly illuminated and a lens focusses it onto the disc. Each hole in the disc scans a line across the character and a complete raster is scanned when the disc completes one revolution. Light transmitted through the holes is collected by a photo-multiplier in which a video scan signal is generated. The character must remain stationary during scanning. Use is often made of a system of auxilliary osillating or rotating mirrors for locating the position of characters on a document.

Fig. 1·6 Nipkow Disc Scanner

Fig. 1·7 Flying Spot Scanner
(From Character Recognition '67)

1.9.8 Shepard's Scanning Disc

The essential difference between Shepard's and Nipkow's scanners is that the Shepard's scanning disc only scans one axis. The other axis of scan is provided either by moving the document or with a beam deflecting mirror. Illumination and detection are the same as used in the Nipkow system.

1.9.9 Flying Spot Scanner

This is a fast and flexible system of scanning documents and is used in many modern machines.

A bright spot of light scanning the screen of a cathode ray tube is focussed onto the document. Various scanning modes are possible, including: raster scanning; raster search scan prcceeded by edge following using special control circuitry; spiral scanning.

Light reflected by the document is detected with a photo-multiplier from which a video signal is derived. The basic idea is represented diagramatically in Fig. 1.7.

The scanning must be performed in a light-tight environment, otherwise the signal would be lost in noise due to stray light falling onto the photo-multiplier. Signal/Noise ratio is often a critical factor in flying spot scanners. For high operational speeds, the phosphor on the CRT screen needs to have very short after glow or else the spot will produce a comet-like tail as it traverses the screen. This reduces the horizontal resolution of the scan. Blue phosphors are fast but the ink-paper contrast is very low which makes the characters illegible. A phosphor combining yellow fluorescence with short after glow must be used. General performance and fidelity of flying spot scanners is almost entirely dictated by the performance of the CRT. Classical signal/noise ratio may be increased by increasing the brightness of the CRT spot but is limited by the maximum output of the tube before damage occurs.

1.9.10 Television Camera

The document is illuminated uniformly and the entire character field is focussed onto the face of the vidicon tube in most applications. The coating on the screen of the vidicon tube can be regarded as a homogeneous RC distribution where the value of R at a particular point or small area on the screen is determined by the light intensity falling on it. When the screen is scanned by the electron beam inside the tube, small areas of the screen are discharged and the current which flows is equivalent to the light distribution on the tube face.

The screen tends to integrate the amount of light falling onto it with time, which results in blurring if characters move rapidly across the screen. This is overcome using flash illumination techniques, described by Griffin[18] and Bell[19], whereby the screen storage property is utilised.

Deflection voltages on the plates can be controlled with switching logic in order to perform special scanning modes.

Stray light falling on the document is not necessarily troublesome using vidicon scanning, as it is with flying spot scanners.

Flying spot scanners and vidicon scanners are compared and contrasted by Nadler[14], Bell[19] and the British Computer Society[13].

1.9.11 Scanned Detector Array

Photo detector arrays usually consist of either discrete photodiodes or an array of photodiodes integrated on a single silicon chip, arranged in columns and rows. It is conceivable that in time integrated photodiode arrays will replace the vidicon tube with advance in integrated photodiode array technology. A self scanned photodiode array has been developed to perform the function of a television camera in the department of electronics at the University of Southampton, released at the 1971 Institute of Physics, physics exhibition. At present high resolution photodiode arrays (comparable to T.V. resolution) are very expensive to manufacture. Consequently low resolution arrays are utilised in the main. These arrays have an array matrix consisting typically of between 10 x 10 and 30 x 30 elemental photodiodes and are used in sensing individual characters. Part of the attraction is lost since auxiliary scanning mirrors become necessary in document reading.

Using modern techniques, described by Noble[20], detector arrays can be miniaturised and scanned with auxiliary integrated shift registers.

1.9.12 Standard Preprocessing of a Video Signal

The purpose of processing the video signal is to bring it into a manageable form suitable for feature extraction. The raw signal from any scanner must be standardised if it is to be used for character recognition. This is generally referred to as normalisation and requires that some prior information be known about the range of ink density, contrast, position, size, etc. of the characters.

A pre-scan of the character is often performed in order to obtain the necessary information for normalisation. Information collected from the previous character can be used and is often sufficient for assessing contrast, perhaps the most important single factor requiring compensation. Pre-scanning of characters is not normally possible with slit scan methods. Here normalisation is made implicit by maintaining high print quality standards and stabilised illumination of characters where sensing is done optically.

Quantisation or digitisation, plays an integral role in data reduction and is done with regard to normalisation. The signal is best digitised by thresholding it to take the values 0 and 1. The threshold voltage must relate to the actual black and white levels existing in the character on the document. The pre-scan assesses these levels, and accordingly sets the threshold voltage. The video signal may be applied to one input of a differential input comparator, whose threshold voltage is controlled by the bias on the other input. A threshold level setting scheme is described by Saraga, Weaver and Woollons[21].

Spatial quantisation is done by averaging or integrating the signal over short periods, thresholding and storing the resultant bits in a binary shift register. A character stored in this way, whether in a static or a dynamic shift register, is accessible for feature extraction by numerous methods.

N-tuples used as features have, for many years, been a popular concept and many systems for constructing them have been devised. Some of these systems are described by: Bledsoe and Browning[6]; Parks and Bell[4]; Aleksander and Albrow[22]. An n-tuple is a fixed topographical configuration of sampling points, often chosen at random, which are weighted with either positive or negative values. More than one n-tuple can be constructed. An n-tuple is made to scan the character. N-tuple sampling points can conveniently be tapped off at different positions along a shift register or a delay line, through which the signal containing a character, is passed. This idea is expanded in review articles by Weaver[23] and Bell[19]. If the character passes through a binary shift register, straight forward positive or negative weighting of the sampling points would be appropriate as used by Bledsoe and Browning[6] and Aleksander and Albrow[22]. Britt[24], describes how a Plessey 5 x 72 photodiode array is used in conjunction with a shift register and 5 delay lines, to scan n-tuples over effectively a 13 x 24 character sampling matrix.

In a system proposed by Hosking and Thompson[25], a recognition logic operates on a 24 x 24 binary matrix representation of characters in order to detect features. The features are derived from the topological structure and layout of "ends" and "joins" of character strokes which are encoded electronically into pulses. Two scanning systems are proposed. One, a static scanner is based on a Marconi V321 vidicon camera and the other involves loading the document on a drum which rotates beneath a photodiode viewing head consisting of two linear arrays. The video signals are digitised and shifted into binary registers. Detailed description of this system by Hosking[26] also appears in the Marconi review[27] which contains articles on various aspects of character recognition.

Vidicon scanning was chosen by Hall[28] in a machine designed to recognise characters by area correlation. The video waveform is clipped (thresholded) at a level depending on the reflectance of the paper used as a white reference. The waveform is time quantised and shifted into a rectangular matrix flip-flop register.

Saraga and Woollons[29] describe "local operator" preprocessing on characters stored in a binary shift register matrix. Local operators perform either skeletonisation or edge extraction of characters. A similar system for thinning or skeletonising characters is also described by Deutch[30]. One method of feature extraction described by Saraga[21], involves tracing round the edge of a character and accumulating a list of direction vectors which are the features. Local operations performed on characters stored in a 60 x 90 binary matrix (computer simulated) in order to extract "essential" features consisting of horizontal, vertical and slant lines, and intersections of lines are described by Bomba[31].

The perceptron concept, first proposed by Dr. Frank Rosenblatt as a model of brain functions, described by Block[32], has important applications in character recognition. The perceptron I consists of 3 layers. Each layer has a pattern plane consisting of a matrix of threshold elements, with delay lines, whose delay times are randomly selected, interconnecting in parallel fashion with another matrix of threshold elements. There are many crossconnections, some excitory, some inhibitory. The name "perceptron" originates from its analogy with neuron networks in the brain. A perceptron machine, adapted for reading mixed font, imperfect characters, is described by Holmes[33].

A flying spot scanning system for performing real time cross correlation or autocorrelation of characters for their recognition is described in a patent by Bell[34].

A novel type of mechanical raster scanner is used in an IBM machine described by Greanias[17]. After standardisation and thresholding which is controlled by a set of "black-white" decision rules, the video signal is time quantised so that a character fits within a 7 x 8 array of black and white cells.

1.9.13 Parallel Access Photo Detector Array

This is included in a separate class from scanners, because although physically very similar to the scanned photodiode array, it is not a scanning device. Characters are projected onto the photodetector retinal array and may move across it. The array outputs provide information about characters in parallel. An analogue voltage is produced in each photosensing element of the array and is transmitted into preprocessing layers, typically an array of comparators for thresholding. It is sometimes argued that it is better to delay thresholding until after performing some form of analogue preprocessing. This enables special analogue processes such as lateral inhibition or the first stage of "perceptron" processing described by Block[32] to be performed, both of which are essentially parallel processes. Thresholding performed at a later stage will invariably economise on the number of comparators required. A 12 x 16 parallel detector array system described by Sheinberg[35] performs parallel comparison between adjacent detectors in order to determine relative contrast.

A parallel photodetector array is envisaged by Chalmers[36] backed by an array of logic cells for performing operations on information transmitted to it.

A parallel shrinking logic matrix is proposed by Levialdi[37] for counting binary input patterns, derived from a parallel photodiode array.

1.10 Methods Using Optical Information Processing

A definition of optical data processing is given by Vander Lugt[38(a)] in a review of optical data processing techniques. The definition consists of satisfying one or more of the following constraints:-

(1) The data are acquired by a primary sensor and are available in a two-dimensional or multichannel one-dimensional format.

(2) The data contain a signal submerged in noise and an attempt is made to detect or recover the signal, or to estimate certain parameters of it.

(3) The transfer function of the optical system is controlled in some prescribed fashion by introducing masks, reference functions, spatial filters, etc. and is independent of a specific data-sample.

(4) The processing operation intentionally reduces the space-bandwidth product of the data, i.e. it is a data-reduction process. The space-bandwidth product of data is the product of its area and the square of its highest spatial frequency.

1.10.1 Direct Methods

These methods are concerned with performing one or more optical operations directly on the optical image of the character to extract features.

1.10.2 Mask Matching

In a broad sense mask matching is an underlying principle behind all character recognition machines. At some stage in the recognition process, usually after pre-processing, the "image" is matched against an alphabet of stored "images" contained typically in the form of resistors in a weighting network whose values are adjusted during training, or in the configuration of a logic circuit.

Optical mask matching is an attempt at implementing these ideas by simply matching the given character, optically, with a character set usually in the form of transparencies, which constitute templates.

An image of the character to be recognised is projected onto each template either in turn or else the image is split and projected onto each mask simultaneously using the system described by Yeliseyev[38(b)]. The total light transmitted is measured by means of a photo cell, and indicates the extent to which a given character matches the template.

Use is sometimes made of two templates, an assertion and a negation. Assertion is transparent where the black character is expected to be, whilst the negation is transparent in areas where white is expected. For perfect match no light is transmitted through the assertion while maximum light is transmitted through the negation. An interesting application and extension of this technique is described by Bell[19] in a survey of character recognition. Some mention to mask matching is also made by Holt[11].

Whilst the obvious attraction of mask matching is its simplicity, its effective alphabet is small owing to the limitations on the amount of information it is possible to collect. Problems with size, shape and registration of characters have discouraged the use of mask matching in commercial machines.

1.10.3 Peephole Masks

This idea closely resembles the n-tuple concept, but differs in that the information processing is based on the perceptron principle. An image of a character is split into several identical images, each one being projected onto a dot pattern mask. The perceptron philosophy is to have random dot pattern masks but they need not necessarily be so.

The total amount of light transmitted by the masks is measured using photocells. This constitutes the first stage in perceptron processing. Each output is thresholded and passes to the next perceptron layer which normally processes the signals electrically. A perceptron machine with an optical processing layer is described by Babcock[39]. Masking techniques in general are described in Character Recognition 1967[13].

1.10.4 Optical Convolution, Correlation and Autocorrelation

Application of correlation processes to optical character recognition originates from techniques used in electrical engineering for signal recovery. Detailed treatment of the theory behind these techniques is described by Lee[40] and Panter[41]. Optical correlation is the logical extension of mask matching and bridges the gap between mask matching and inverse transforms.

Complete treatment of correlation and convolution theory together with Fourier transform theory and how they are interelated is given in the next chapter.

Optical implementation of correlation theory in most cases uses nothing more than geometrical optics as shown by McLachlan[42]. In some cases, as will be shown in the following chapter, a convolution produces exactly the same result as a correlation.

In one dimension the correlation integral is of the form:-

$$\int_{-\frac{T}{2}}^{+\frac{T}{2}} f_1(x) f_2(p + x)\, dx$$

and the integral evaluated for $-\infty < p < \infty$ where $f_2(x)$ is correlated with $f_1(x)$.

In optical correlation, the functions are represented by two dimensional intensity distributions bound by a frame that determines the fundamental frequency or period, T, over which the integral is evaluated.

The intensity distribution of at least one of the two functions to be correlated must be in the form of a transmission function i.e. photographic slide. When two photographic slides of transmission functions $f_1(x,y)$ and $f_2(x,y)$ are placed in contact, the light transmitted through an elemental area, determined by x and y, is proportional to the product of f_1 and f_2 for that particular value of x and y. The total amount of light transmitted between the limits of the frame is thus an infinitesimal summing over the area of such products and is represented mathematically by the area integral:-

$$\iint_A f_1(x,y)f_2(x,y)dxdy$$

In order that a correlation be computed, this integral must be evaluated for all displacements in x and y of f_2 in relation to f_1:-

$$\iint_A f_1(x,y)f_2(p + x,\ q + y)dxdy$$

There is a very elegant way of performing a correlation optically without the cumbersome shifting of the one slide relative to the other. This is done by separating the two slides by an appropriate distance 'd' and focussing the transmitted light with a lens of focal length F. This is illustrated in Fig. 1.8.

The natural flow sequence of optical multiplication, integration and correlation is also followed by Mazurowski[43] and Goodman[44] who provide a full treatment.

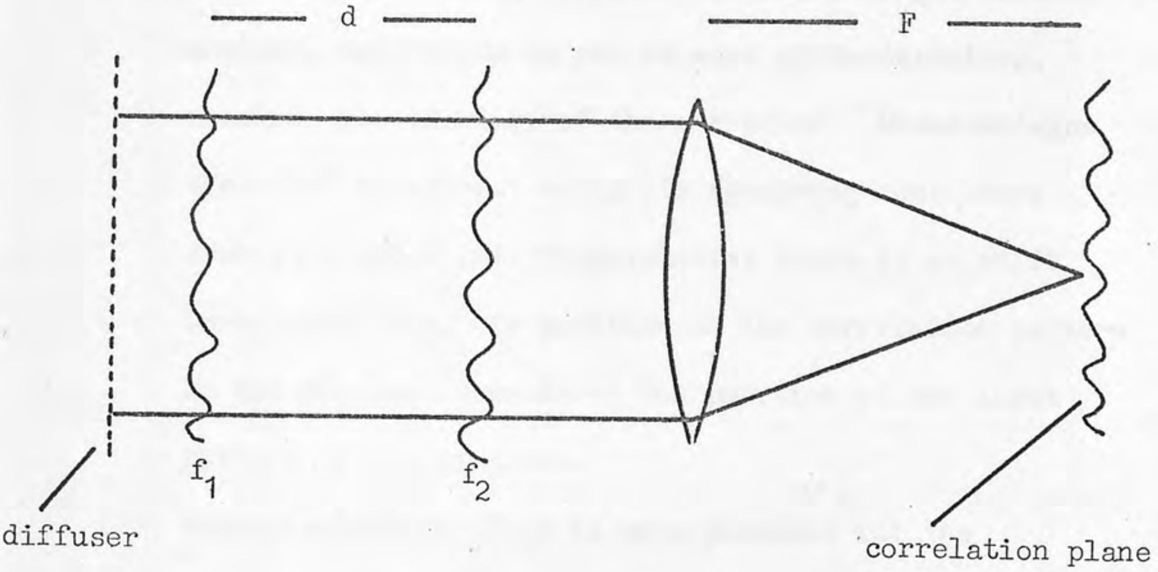

Fig. 1.8

The entire correlation process is performed simultaneously and is represented as points in the focal plane of lens. A point in the correlation (x,y) plane is equivalent to a particular displacement (p,q) of f_2 in the previous configeration and is related to d and F by:-

$$\frac{\sqrt{p^2 + q^2}}{d} = \frac{\sqrt{x^2 + y^2}}{F}$$

This configuration is most commonly used in character recognition. Light intensities over the correlation plane are sampled with photo cells and provide features for recognition.

Autocorrelation is performed when f_1 and f_2 are identical functions. It is possible to usę only one slide by reflecting the light transmitted back through the same transparency. Optical arrangements for performing autocorrelation are described by Horwitz and Shelton[45].

There are three basic applications of correlation to the recognition of characters.

(1) The given character is correlated with a set of archetype characters and the one giving the best correlation (usually characterised by a bright central maximum) determined by one or more photo-detectors, provides the identity of the character. Disadvantages are: 180° rotational ambiguity rendering characters such as 6 and 9 indistinguishable; there is no shift invariance, i.e. the position of the correlation pattern in the XY plane depends on the position of the input pattern in the xy plane.

(2) Autocorrelation. This is only possible for the character in the form of a transparency, since by the definition of character recognition, it is not known in advance which character is going to arrive next for recognition. In this case the autocorrelation plane is examined in order to identify characters. Autocorrelation can be made shift invariant but 180° rotational ambiguity remains.

(3) Correlation with discrete frequency gratings. This is used to analyse the frequency content of characters and provides a means of recognising characters by measuring Fourier coefficients. It also provides a means of generating Fourier transforms using incoherent light described at the end of this chapter.

Correlation techniques have more successfully been applied to pattern recognition, some of these are described by McLachlan[42], Horwitz and Shelton[45], and Bell[34]. Autocorrelation is generally favoured for use in character recognition. A character recognition machine which performs optical autocorrelation of input characters built by Hawker Siddeley Dynamics is described by Holden[46]. A scheme is also described by Clowes[47]. A valuable contribution to the literature on autocorrelation is made by Kovasznay and Arman[48] who investigate the optical autocorrelation of two-dimensional random patterns.

1.10.5 Transform Methods

A transform is often regarded as a redistribution or recoding of information without any being lost. It has a mathematical statement defining the nature of the recoding and is usually expressed using complex notation. Some of the more important transforms in optics are described by Edgar[49]. General transformations in optics are described by Mertz[50] and Fesnel transformations of Images are described by Mertz and Young[51].

The most useful and important optical transform in character and pattern recognition is the Fourier transform. Theoretically a transformation process involves no loss in information, however, inherent losses will occur due to the frequency cut off of the optical system. Often incorporated into the transforming process will be means of data reduction for extracting features.

1.10.6 Coherent Fourier Transform

The coherent generation of an optical Fourier transform has for many years been successfully applied to pattern recognition. Many techniques have involved the use of optical filters and are reviewed by Vander Lugt[38]. Treatment is also given by Goodman[52] and Smith[53(a)]. Its application in character recognition has received much attention[53(b), (c)] but suffers from the disadvantage that the character is required in the form of a transparency. It is a convenient means of analysing the frequency content of characters, but it remains of little practical use unless progress is made in the use of photo-chromic emulsion which temporarily blacken when a character is projected onto it.

The method is based on producing the Fraunhofer diffraction pattern by illuminating the transparency with light having a high degree of temperal and spatial coherence, using the optical arrangement shown in Fig. 1.9. Fourier coefficients are represented in amplitude and phase by points in the transform plane. Phase information is however only retrievable if the diffraction pattern is interfered with, by a reference beam. This is termed a Fourier hologram and is used in manufacturing phase filters, described by Keyte[54], which can be used as templates in character recognition. Character recognition by holography is also dealt with by Gabor[55(a)].

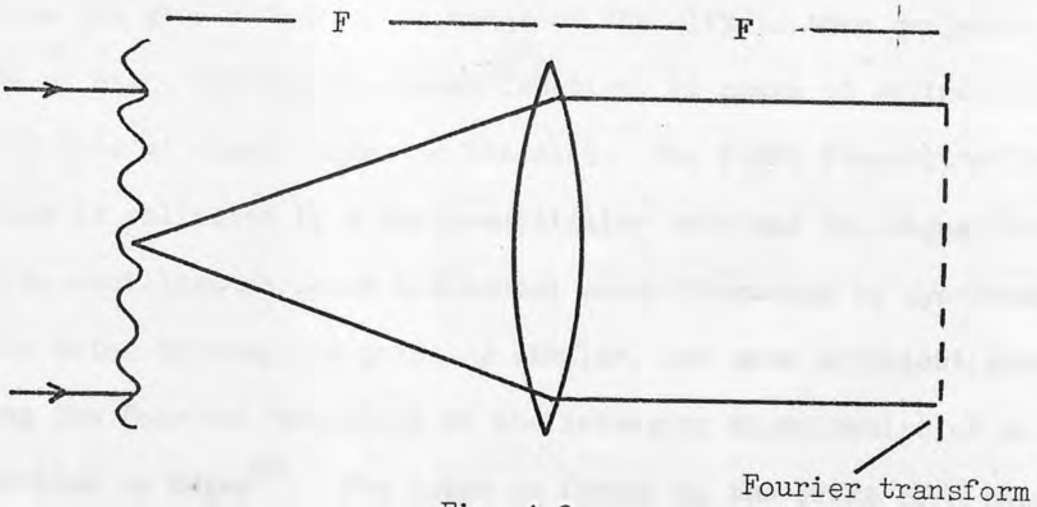

Fig. 1.9

1.10.7 Incoherent Fourier Transform

Incoherent Fourier Transformation refers to the convolution of the input pattern with a multiplicity of sinusoidal transmission gratings of various spatial frequencies and orientations. Each grating determines a particular Fourier frequency according to its frequency and orientation. Convolution and correlation used in this context are synonyms. Information aspects of this form of transform are discussed by Rogers[55(b)].

The convolution with each grating produces a sinusoidally varying shadow whose contrast is a measure of the amplitude of a Fourier coefficient and position is a measure of phase.

This method of frequency analysis has been known since the beginning of the century and has found application in many diverse fields including detection of cycles in climatic conditions and application to study of tree growth described by Douglass[56]; sunspot cycles, Douglass[57]; analysis of hidden periodicities in irregularities in cotton spinning products, Foster[58]; more recently, thickness gauging of hot steel rods, Baker[59].

A system for displaying a continuous frequency spectrum on a cathode ray oscillascope was developed by Born, Furth and Pringle[60] for use in x-ray crystal analysis work. A grid with a sinusoidal profile is rotated about an axis perpendicular to the plane of the grid and is imaged onto a slit. The frequency of the intensity profile down the length of the slit varies as the grid rotates. An image of the slit is then projected onto a slide or mask, bearing the input function, by means of cylindrical lens, with its axis at right angles to the slit. The light transmitted through the slide is collected by a photo-multiplier tube and the signal displayed on a C.R. oscillascope whose horizontal sweep frequency is synchronised with the motor driving the grid. A similar, but more efficient, system for deriving the Fourier transform of the intensity distribution of an image is described by Edgar[61]. The image is formed in the plane of a pair of contrarotating closely spaced ruled grids, and the light transmitted by the grids, collected onto a single detector. The Fourier transformation is performed by the varying frequency moiré fringes.

It is possible to generate an entire Fourier transform temporally within practical frequency limits by convolving the input intensity distribution function optically with a single sinewave grating, and continually varying the sampling frequency by controlling the spacing between the pattern and the grid. A two dimensional transform is constructed by altering the orientation of the grid after each frequency sweep. Alternatively, the grid can be continuously rotated, and the sampling frequency slowly changed. Many similar experimental correlograms and Fourier transforms are described by Barber[62].

In character recognition, use is made of Fourier coefficients that have been specially selected on their merits. These merits include: ability to distinguish many different pairs of characters; retaining sensibly the same values for different type fonts; exhibiting immunity to character imperfections and noise. A procedure for obtaining such a set of Fourier coefficients together with a means of implementing them in terms of hardware for character recognition is described by Leifer, Rogers and Stephens[63].

1.11 Books and General Literature

Many character recognition systems were described during the proceedings of the 1968 IEE - NPL conference on pattern recognition. A book edited by Hannan[64] contains chapters written by various authors dealing with general theory and techniques in optical character recognition together with descriptions of several machines. A book biased towards the business applications of character recognition is presented by The Business Press[65].

An introduction to optical character reader considerations by Balm[66] describes an IBM machine and goes on to survey many techniques used in character recognition. It is one of a number of papers in an issue of the journal of the pattern recognition society of America which deals exclusively with character recognition.

A comprehensive state of the art in pattern recognition is thoroughly dealt with in a paper by Nagy[67]. It provides a complete survey of approaches to pattern classification theory and deals with systems of feature extraction and preprocessing.

Keyte's thesis [54] entitled "The Use of Complex Spatial Frequency Filters in Correlation Processes" is in many ways complementary to this thesis. It is concerned with optical correlation systems and the manufacture of complex filters used for processing 2-D data in pattern recognition.

CHAPTER 2

FOURIER TRANSFORMATION THEORY

2.1 Introduction

The representation in the form of a trigonometric series of an arbitrary function was first firmly established by the French mathematician Jean Baptise Joseph Fourier (1768 - 1830) around the beginning of the nineteenth century. Full treatment of this early work is dealt with by Carslaw[68].

Fourier analysis has played a key role in developing communication theory and information processing theory. Optical information processing of information has developed steadily since circa 1950 and, stimulated by the invention of the laser, the processing of information by optical means is in the scientific forefront today.

The theory of optical information processing hinges on Fourier theory, and by this virtue, basic similarities with classical communication theory are realised.

2.2 Fourier Series

Mathematically, a Fourier series can be expressed in any number of dimensions. Its most useful practical forms are in one and two dimensions. The one dimensional Fourier series will be used to develop basic ideas and to illustrate the connection with the Fourier integral transform. In optical data processing, the 2-D Fourier transform is normally most appropriate.

If a one dimensional function f(x) satisfies Dirichlets conditions (they always are in physical situations) in an interval $-\frac{T}{2}$ to $+\frac{T}{2}$ say, then that function may be represented as a periodic function, with a period T, by a harmonic series consisting generally of sine terms and cosine terms. This series is called a Fourier series and is written:-

$$\frac{a_o}{2} + \sum_{n=1}^{\infty} (a_n \text{ Cos } nw_o x + b_n \text{ Sin } nw_o x)$$

a_o, a_n and b_n are the Fourier coefficients of f(x) for the harmonic series and are defined by:-

$$a_o = \frac{2}{T} \int_{-\frac{T}{2}}^{+\frac{T}{2}} f(x)dx$$

$$a_n = \frac{2}{T} \int_{-\frac{T}{2}}^{+\frac{T}{2}} f(x) \text{ Cos } nw_o x \, dx$$

$$b_n = \frac{2}{T} \int_{-\frac{T}{2}}^{+\frac{T}{2}} f(x) \text{ Sin } nw_o x \, dx$$

a_o is the average "algebraic" height under the curve f(x) between $-\frac{T}{2}$ and $+\frac{T}{2}$. In optical data processing, a_o corresponds to the total light flux transmitted through the data when in the form of a 2-D transmission function contained on a photographic transparency. The sine and cosine series combined provide both amplitude and phase information about the harmonics present in the series. This is illustrated when the Fourier series is written in the form:-

$$\frac{a_o}{2} + \sum_{n=1}^{\infty} \sqrt{a_n^2 + b_n^2}\ \mathrm{Cos}\,(nw_o x - \theta_n)$$

where $\theta_n = \tan^{-1} \dfrac{b_n}{a_n}$

The Fourier series is elegantly expressed using complex notation by:-

$$f(x) = \sum_{n=-\infty}^{\infty} C_n\, e^{inw_o x}$$

where:

$$C_n = \frac{1}{T} \int_{-\frac{T}{2}}^{+\frac{T}{2}} f(x)\, e^{-inw_o x}\, dx$$

which is essentially a Fourier transform pair for periodic functions. The transform of a periodic function f(x), C_n, consists of a line spectrum. To separate the amplitude and phase characteristics, C_n may be written:-

$$C_n = \tfrac{1}{2} \sqrt{a_n^2 + b_n^2}\ \exp\left[\, i \tan^{-1}\left(-\frac{b_n}{a_n}\right) \right]$$

$$\left| C_n \right| = \tfrac{1}{2} \sqrt{a_n^2 + b_n^2}$$

2.3 Aperiodic and Transient Functions

Aperiodic functions are ones that vary randomly within infinite limits or whose value at any point is unpredictable. The generalisation of Fourier theory for the inclusion of random phenomena is possible only with the aid of theory in statistics and probability. This is dealt with by Lee[40].

Fortunately in optical information processing a special class of aperiodic functions known as transient functions is more relevant. Transient functions may be said to vary randomly within a finite interval (of time or space), but whose values are zero everywhere outside that interval. Characters can be regarded as transient functions in the two dimensional space plane.

If a transient function is repeated periodically then it can be represented by a Fourier series whose fundamental frequency is the frequency of the repeat periodicity. This is illustrated one dimensionally in Fig. 2.1. When the repeat period is doubled, the overall shape of the frequency line spectrum remains the same but the lines crowd in to half their previous spacing at the same time halving in amplitude. The lines now constitute harmonies of a fundamental which is half the frequency of the previous fundamental. A true transient function is approached when the repeat period is extended to infinity. This effectively isolates a single transient function. The frequency spectrum, containing both phase and amplitude information, becomes continuous and is termed the Fourier transform of the transient function.

Mathematically the Fourier transform of a transient is an integral which is derived logically from the Fourier series by extending the period to infinity. The discrete harmonic term nw_0 is replaced by a variable frequency term w; whilst C_n, originally apertaining to discrete frequencies, is replaced by the complex frequency function $F(w)$ multiplied by the frequency increment dw. $F(w)dw$ is essentially a spectral density term.

Fig 2·1 The Harmonic Representation of a Repeated Transient Function. (After Barber).

This results in the Fourier integral transform pair:-

$$f(x) = \int_{-\infty}^{+\infty} F(w)\, e^{iwx}\, dw$$

$$F(w) = \frac{1}{2\pi} \int_{-\infty}^{+\infty} f(x)\, e^{-iwx}\, dx$$

In two dimensions:

$$f(x,y) = \int_{-\infty}^{+\infty}\int_{-\infty}^{+\infty} F(U,V)\, e^{i(Ux + Vy)}\, dU\, dV$$

$$F(U,V) = \frac{1}{4\pi^2} \int_{-\infty}^{+\infty}\int_{-\infty}^{+\infty} f(x,y)\, e^{-i(Ux + Vy)}\, dx\, dy$$

Both f(x,y) and F(U,V) can be complex. In optical information processing it is usual for the input data to be real. Furthermore, the input data can only be complex in coherent optical systems. For example, phase filters and phase holograms. F(U,V) is nearly always complex.

2.4 Correlation and Convolution

In chapter 1, correlation was described briefly in relation to character recognition but was not distinguished from convolution.

Characters constitute real data; however for complete generality, complex input data is considered. Two functions are involved in correlation and convolution, one of which is correlated or convolved with the other as the case may be. The functions may be aperiodic.

2.4.1 Correlation

The general definition of correlation is the complex correlation function:-

$$\int_{-\infty}^{+\infty} \bar{f}_1(x)\, f_2(x + p)\, dx$$

subject to:-

$$\int_{-\infty}^{+\infty} \left| f_1(x) \right| dx \qquad \text{and:} \qquad \int_{-\infty}^{+\infty} \left| f_2(x) \right| dx$$

existing and being finite. $\bar{f}(x)$ is the complex conjugate of $f(x)$. When $f(x)$ is real, $\bar{f}(x) = f(x)$.

Correlation involves evaluating the integral for all values of p in the range $-\infty < p < \infty$. In practice aperiodic functions are sampled between finite limits and p will accordingly take finite limits. In the optical case, input functions are of the transient type and p is governed by the limits of the transience. Correlation is related to the respective Fourier transforms of $f_1(x)$ and $f_2(x)$ by the correlation theorem.

2.4.2 Correlation Theorem

Let $F_1(w)$ and $F_2(w)$ be the respective Fourier transforms of $f_1(x)$ and $f_2(x)$. Substituting:-

$$f_2(x + p) = \int_{-\infty}^{+\infty} F_2(w)\, e^{iw(x + p)}\, dw$$

into the correlation integral, gives:-

$$\int_{-\infty}^{+\infty} \bar{f}_1(x)\, dx \int_{-\infty}^{+\infty} F_2(w)\, e^{iw(x + p)}\, dw$$

Reversing the order of the integration:-

$$\int_{-\infty}^{+\infty} F_2(w)\, e^{iwp}\, dw \int_{-\infty}^{+\infty} \bar{f}_1(x)\, e^{iwx}\, dx$$

Now:-

$$\frac{1}{2\pi}\int_{-\infty}^{+\infty} \overline{f_1}(x)\, e^{iwx}\, dx = \overline{F_1}(w)$$

The correlation integral becomes:-

$$2\pi\int_{-\infty}^{+\infty} \overline{F_1}(w)\, F_2(w)\, e^{iwp}\, dw$$

It can thus be stated that the correlation function:-

$$\int_{-\infty}^{+\infty} \overline{f_1}(x)\, f_2(x+p)\, dx$$

has the transform $2\pi\,\overline{F_1}(w)\,F_2(w)$ which is a statement of the correlation theorem.

2.4.3 Parseval's Theorem

This is derived from the correlation theorem by putting $p = 0$. Its general form (in one dimension) is:-

$$\int_{-\infty}^{+\infty} \overline{f_1}(x)\, f_2(x)\, dx = 2\pi\int_{-\infty}^{+\infty} \overline{F_1}(w)\, F_2(w)\, dw$$

In optics it is more often quoted in the form:-

$$\iint_{-\infty}^{+\infty} \left| f(x,y) \right|^2 dx\, dy = \iint_{-\infty}^{+\infty} \left| F(U,V) \right|^2 dU\, dV$$

The "2π" is normally omitted when applied in optics.

2.4.4 Convolution

This is the same as correlation in essence but includes folding or reflecting the displaced function. Convolution of f_1 with f_2 (including complex functions) is defined by:-

$$\int_{-\infty}^{+\infty} f_1(x)\, f_2(p - x)\, dx$$

subject to the same conditions as for correlation. The convolution equivalent of the correlation theorem, derived in a similar manner, is the convolution theorem which states that:-

$$\int_{-\infty}^{+\infty} f_1(x)\, f_2(p - x) \text{ has the Fourier transform } 2\pi F_1(w)\, F_2(w).$$

The convolution theorem is often more convenient to use in applied optics since the absence of complex conjugates can assist analysis or interpretation of transforms. Both the correlation theorem and convolution theorem have inverse statements which can be derived by similar reasoning to that given for the correlation theorem. The special cases of correlation and convolution where $f_1 = f_2$ are termed autocorrelation and autoconvolution respectively.

2.5 Optically Generated Fourier Transforms

2.5.1 Fourier Transform by Diffraction of Light

It is well known that the Fourier transform of a two dimensional transmission object is generated in the back focal plane of a lens when a spatially and temporally coherent light beam is diffracted at the object placed in the front focal plane of the lens. Detailed analysis is dealt with by Goodman[44] and Shulman[69]. The Fourier transform is manifest in the Fraunhofer diffraction pattern.

A Fourier transform generated by this means is not the prime concern of this thesis; discussion for this reason will be restricted. Their importance in interpretation of radar signals, X-ray diffraction patterns, and their general application in pattern recognition and image processing should not be underestimated.

2.5.2 Generation of Fourier Coefficients by Convolution

Fourier coefficients can be generated individually by shadowing or convolving optically the input data in the form of a self luminous two dimensional distribution of light and shade with transmission gratings having a sinusoidal profile.

Assuming a 100% modulation grating having a profile of the form $\frac{1}{2}(1 + \text{Sin}\,\frac{2\pi}{T}\,x)$ where T is its spatial period. Let the input data be f(x,y), then the two dimensional convolution integral is:-

$$\frac{1}{2}\iint_{-\infty}^{+\infty} f(x,y)\,[1 + \text{Sin}\,\frac{2\pi}{T}\,(p - x)]\,dx\,dy$$

This may be split into a sum of two integrals:-

$$\frac{1}{2}\iint_{-\infty}^{+\infty} f(x,y)\,dx\,dy \;+\; \frac{1}{2}\iint_{-\infty}^{+\infty} f(x,y)\,\text{Sin}\,\frac{2\pi}{T}\,(p - x)\,dx\,dy$$

The left hand integral is a zero order term which is proportioned to the total light flux transmitted through the data and unavoidably adds to the modulated term represented by the right hand integral.

Considering the right hand integral when $p = o$; the integral corresponds to sampling a line frequency at a point in the sine spectrum determined by T. This is realised optically when a sinewave grid is placed in contact with the input transparency (having its stripes parallel with the y axis in this case) and the light transmitted over the entire area of the transparency measured by collecting it onto a photo detector. No special aperture convolution term is required for functions of the transient type if the grid extends beyond the limits of the input function.

The cosine term for the same frequency can similarly be measured by shifting the grid a quarter of a period. This is the basis of a Fourier analyser described by Edgar, Lawrenson and Ring[61].

Advantage can be taken of the optical convolution process, pointed out in chapter 1, whereby the integral is effectively evaluated for all intermediate phases between practical limits. The net result is a shadow having a sinusoidal profile whose amplitude and phase are proportional to the respective amplitude and phase of the frequency being sampled in the optical data. Convolution of primary optical data with a transmission grating having a sinusoidally varying profile thus generates a sinusoidally varying shadow representing a Fourier coefficient and eliminates the necessity of having the data in contact with the grid.

If data are made self luminous in the input plane, a multiplicity of Fourier coefficients can be generated simultaneously using a multiplicity of grids with different sampling frequencies and orientations. (Fig. 3.1)

It is instructive to note the similarity between a Fourier coefficient generated when a frequency grid, infinite in extent, travels across the data in contact with it, at uniform velocity; and the same Fourier coefficient represented by a point in the Fraunhofer diffraction pattern of the data. In the former, each point in the data plane is modulated sinusoidally, the phase of which depends on the position of that point along the direction of motion. This phase position dependence corresponds to the phase incurred by the various optical paths from different parts of the input data to a point in the Fraunhofer diffraction plane, in the coherent optical case.

An industrial application of Fourier coefficients, generated by moving an infinite grid in the form of a radial grating to thickness gauging, is described by Baker[59].

2.6 Fourier Transforms Generated by Digital Computer

It is often desirable to generate two dimensional Fourier transforms using a digital computer. With modern computers, detailed transforms can be computed quickly and efficiently using programming techniques developed by Cooley and Tukey[70]. The philosophy behind the fast Fourier transform is explained in detail by Cochran[71].

Using a digital computer, the accuracy and the number of coefficients it is possible to generate, is largely dictated by the method used in sampling the original data.

2.6.1 Data Sampling

The most common mode of sampling two dimensional transient space functions is by means of a rectangular lattice of discrete sampling points. The spacing between sampling points determines the bandwidth of the sample. Whereas a naive approach to reconstruction of the original function from the sampled data would be to interpolate between sampling points; the absolute fidelity of the reconstruction relates directly to the bandwidth limitation impose by the sampling.

If the original image is completely described within a limited bandwidth, then a specific maximum sampling spacing or pitch will exist so that every detail about the image may be recovered from the sampling. This maximum pitch is easily derived with the assistance of the convolution theorem (inverse case), shown by Goodman[72]. The principle is illustrated in Fig. 2.2 and Fig 2.3. Fig. 2.2 illustrates the sampling lattice while Fig. 2.3(a) shows the frequency spectrum of the sampled function whose original spectrum is shown in Fig. 2.3(b). The part of the spectrum containing the original function can only be retrieved provided there is no overlap of the spectral zones in Fig. 2.3(a).

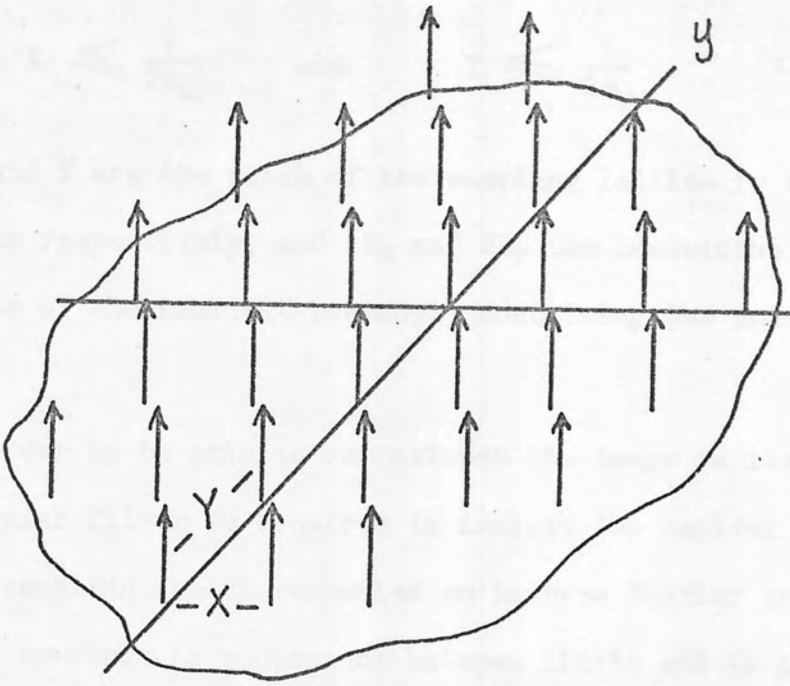

Fig. 2.2

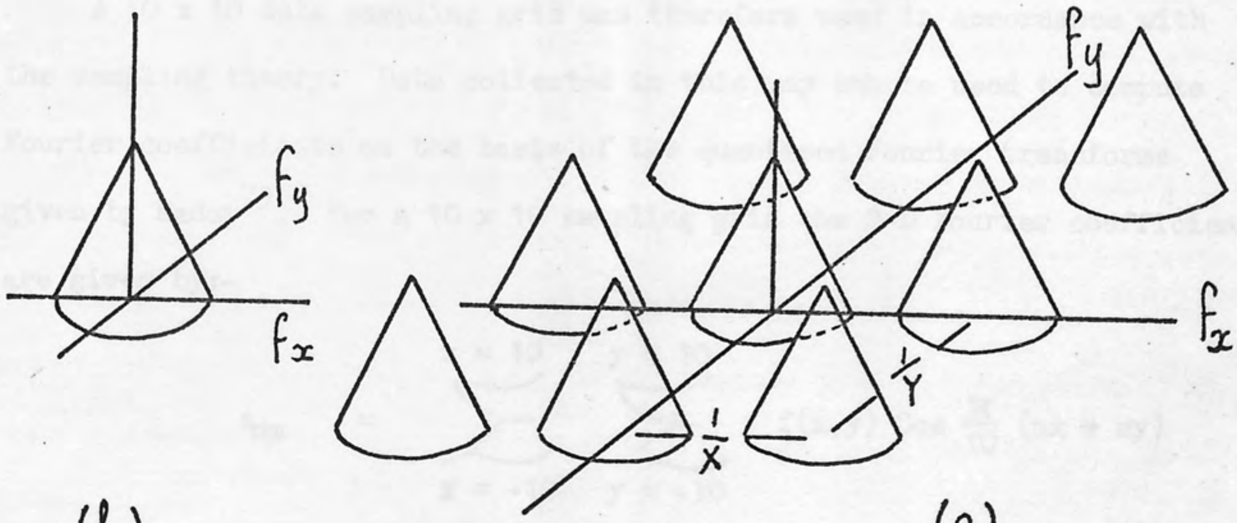

(b) (a)

Fig. 2.3

This condition is satisfied if:-

$$X \leqslant \frac{1}{2B_x} \quad \text{and} \quad Y \leqslant \frac{1}{2B_y}$$

where X and Y are the pitch of the sampling lattice in the x and y directions respectively, and $2B_x$ and $2B_y$ the bandwidths in the x and y directions of the smallest rectangle containing the spectrum of the input function.

In order to be able to reconstruct the image in its original form, a rectangular filter is required to isolate the central frequency band.

The sampling theory resembles an inverse Fourier series where the frequency spectrum is continuous between limits and is periodic, while the input function is discrete.

The experimental work for this thesis involves determining low frequency Fourier coefficients of characters which are used as features for their recognition. Useful coefficients are selected initially from a set of computer generated coefficients whose frequencies range between 0 and 5 times a frame frequency.

A 10 x 10 data sampling grid was therefore used in accordance with the sampling theory. Data collected in this way can be used to compute Fourier coefficients on the basis of the quantised Fourier transforms given by Radoy[73]. For a 10 x 10 sampling grid the 2-D Fourier coefficients are given by:-

$$a_{nm} = \sum_{x=-10}^{x=10} \sum_{y=-10}^{y=10} f(x,y) \operatorname{Cos} \frac{\pi}{10} (nx + my)$$

$$b_{nm} = \sum_{x=-10}^{x=10} \sum_{y=-10}^{y=10} f(x,y) \operatorname{Sin} \frac{\pi}{10} (nx + my)$$

n and m are integers within the limits:-

$$0 \leqslant n \leqslant 5$$

$$-5 \leqslant m \leqslant 5$$

A fast Fourier transform could be generated, computing a_{nm} and b_{nm} by adding all cophasal points in the original data before multiplying it by an appropriate phase factor. Cophasal points lie along straight strips on the input array.

Amplitude of Fourier coefficients is determined by $\sqrt{a_{nm}^2 + b_{nm}^2}$, whilst phase is given by:

$$\tan^{-1}\left(\frac{b_{nm}}{a_{nm}}\right)$$

2.7 Other Methods of Generating Fourier Transforms

Analogue devices for generating Fourier transforms are described by Barber[62]. Some Fourier transform analogue computers are also described by Jennison[74].

There are two basic analogue methods for generating Fourier transforms by electronic means. The first method, due to Tucker[75] is essentially simulation of the Fraunhofer diffraction process. The sampled data is modulated and each sampling line delayed by pre-selected amounts before being recombined, thus producing a resultant modulation representing a Fourier coefficient in amplitude and phase. Tucker was able to scan the frequency spectrum by merely varying the modulation frequency.

The second method can work with d.c. voltages. Sine and cosine terms are generated separately. Cophasal data points are first added together. Analogue voltages are imparted phases in fixed gain amplifiers whose gains are precalculated. Some amplifiers will be used to invert and other will not. Alternatively, phase factors can be allocated with banks of potentiometers which are set for the appropriate phases. Two phase banks are required, one for constructing sine terms and the other for cosine terms.

CHAPTER 3

PRINCIPAL DEVELOPMENT OF EXPERIMENTAL WORK

3.1 Introduction

The experimental work commenced with a feasibility study for the measurement of Fourier coefficients generated by optical convolution. It was intended to measure amplitude and phase of Fourier coefficients generated by convolving self luminous characters with sinusoidal transmission gratings. Results obtained from these measurements were to be analysed thereby determining how many coefficients, and which ones in particular, are necessary in order to recognise alphanumeric character sets via appropriate electronic circuitry.

In practice, high contrast grids with a squarewave profile are used. These are simple to construct and their accuracy can easily be checked on a travelling microscope. The disadvantage of using a squarewave grid is that is contains odd spatial harmonics, but these progressively diminish in amplitude with increasing frequency. These harmonics are effectively filtered out by using a suitable mask in the shadow detecting plane. It should be noted that a squarewave grid contains a fundamental whose amplitude can be greater than the maximum depth of modulation contained on a purely sinusoidal grid. Spatial frequencies of grids used in the experimental work are in the order of 5 lines per centimetre.

A Fourier coefficient is manifested in the form of a spatial sinusoidally varying shadow intensity profile imposed on a d.c. light level, produced when characters are convolved with a frequency grid.

The first task was to derive a convenient means of measuring contrast and position of the shadows, thus establishing amplitude and phase values for Fourier coefficients. It was originally intended to sample Fourier coefficients using a quantised or stepped zone plate. Work at this stage was orientated to do this.

A stepped zone plate[75(a)] consists of a multiplicity of squarewave grids having many different spatial frequencies and orientations as illustrated in Fig. 3.1.

Work performed at this time (not by the author) consisted of shadowing characters through the quantized zone plate and recording the shadows on photographic emulsion. Visual estimates of contrast were made for each grid on the zone plate. Photo-densitometer graphs were also made from the photographs. Both proved unreliable and depended critically on exposure. Measurement of Fourier coefficients by photographic means was therefore abandoned and the measurement using photo-detectors directly from the shadow plane was developed. This had a two fold advantage in that a Fourier analyser in this form could easily be adapted for character recognition.

An alternating signal exhibiting phase and amplitude characteristics of a sinusoidal shadow may be generated in a photo-sensitive device by producing a motion of the shadow across the detector relative to it. The relative motion of the detector should be sensibly perpendicular to the stripes and is convenient to execute simple harmonic motion or circular motion. The detector is stopped with a slit aperture whose width is no greater than half a period of the spatial period of the shadow.

The following proposals were made for effecting shadow scanning:-

1. A thin prism situated between the character and the detectors, which rotates about an axis parallel to the light path.
2. A plane mirror used to deflect the light from the character back along a path inclined at about 20° to the original. The mirror is mounted to rotate about an axis which is not quite perpendicular to the plane of the mirror.

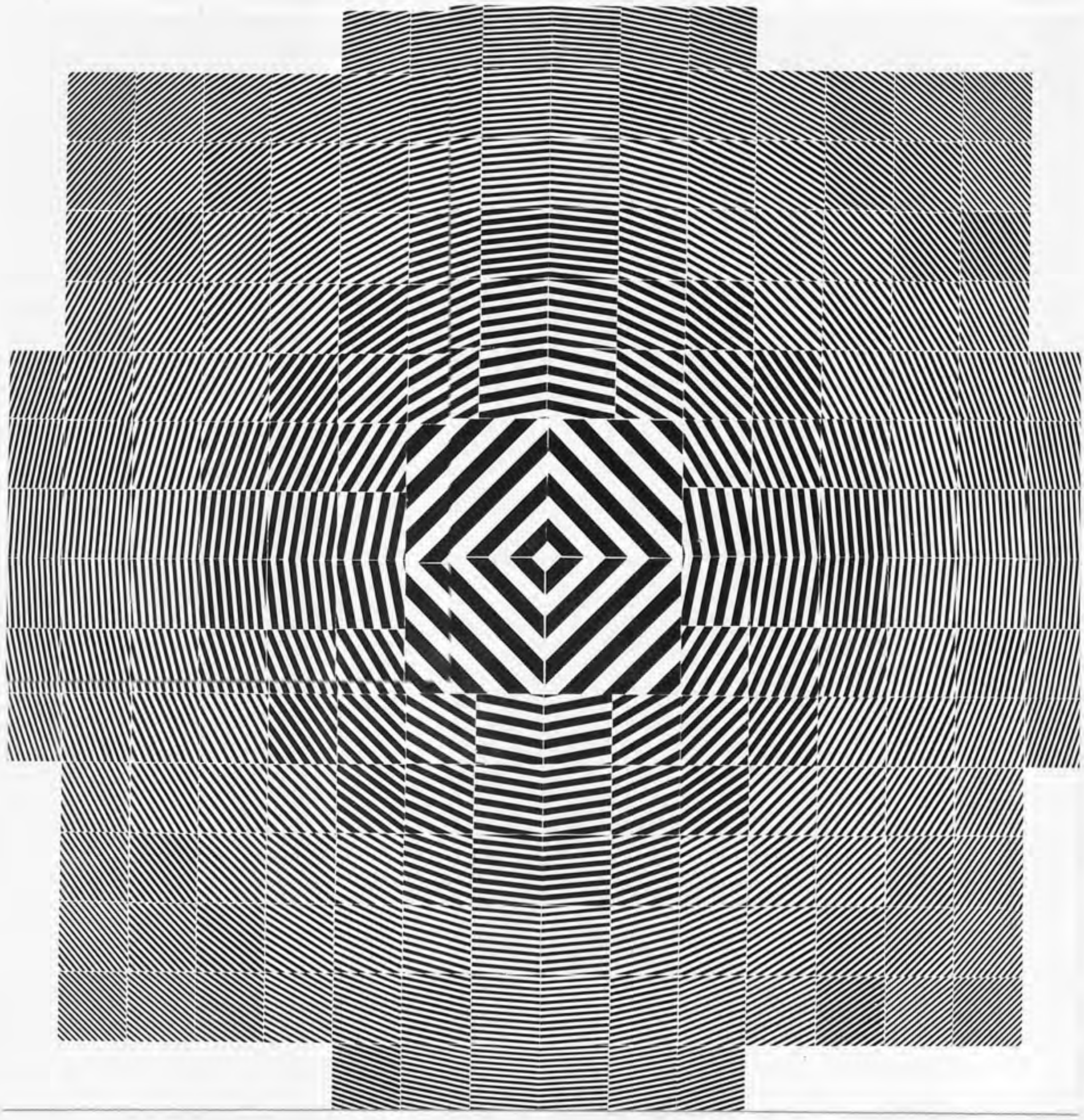

Fig. 3.1 Quantised zone plate

3. Transmission equivalent of 2, i.e. a parallel side slab of glass is rotated about an axis parallel to the light path, whose plane is inclined slightly to the axis of rotation.
4. By moving either the character or the grids or the detectors. For example a radial grating could be rotated.
5. Motion across the screen of a character displayed on an electron image tube.
6. Simulation of 5 using the motion across the screen of light spot produced on a cathode ray tube.

Proposal 6 was adopted initially to demonstrate the feasibility of measuring contrast and position of shadows with a view to using proposal 2 later. The rotating mirror imparts a circular scanning mode and can therefore be used with any grid orientation.

3.2 Experimental Procedure

A sinusoidally time varying voltage having a frequency of about 100 Hz was applied to the X-plates of a cathode ray oscillascope. A single squarewave grid (approximately 10 lines per inch) was placed 3 to 4 cm. in front of the screen, parallel to it, with its stripes vertical. Light was detected by an ORP12 photoconductive cell, placed a further 2 cm. behind the grid. The arrangement is shown in Fig. 3.2. The photoconductive cell was wired into a potentiometer circuit shown in Fig. 3.3. An alternating e.m.f. thus produced was tapped off and fed to a simple transister amplifier. This signal was then displayed on a second oscillascope. Light intensity modulation at the detector produced by the spot traversing the screen of the first oscillascope, interacting with the grid was clearly observed. The shape of the signal displayed on the second oscillascope is shown in Fig. 3.4.

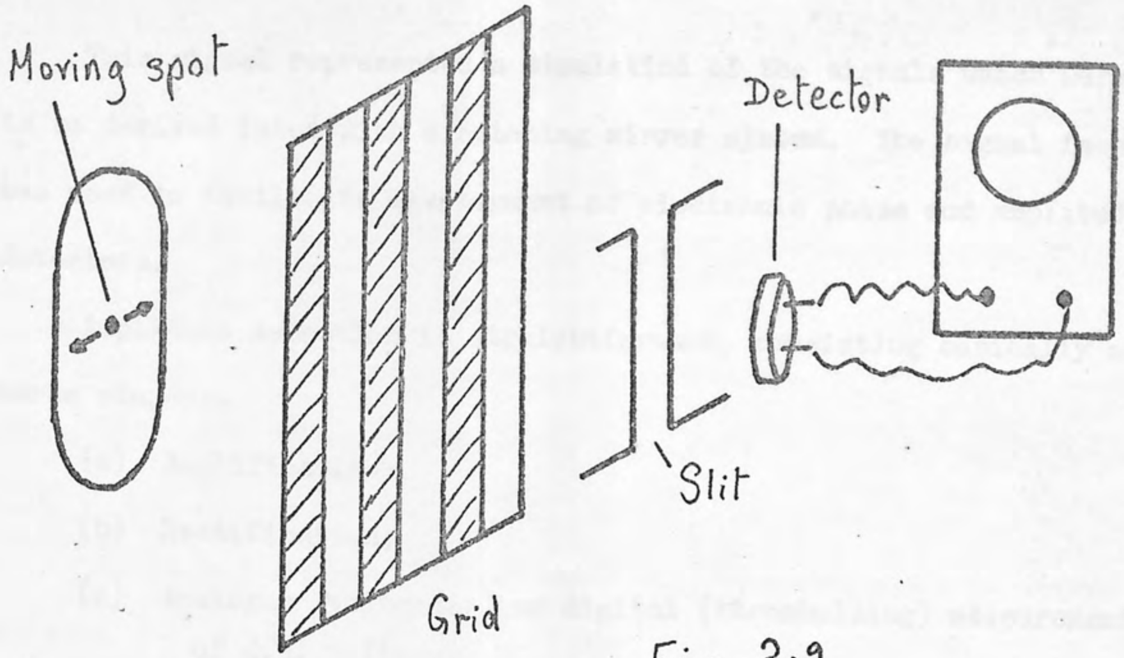

Fig. 3·2

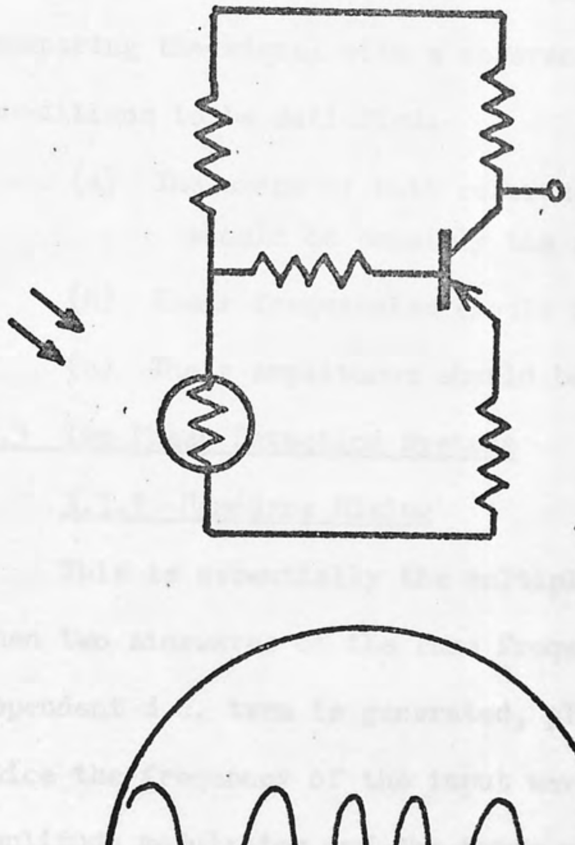

Fig. 3·3

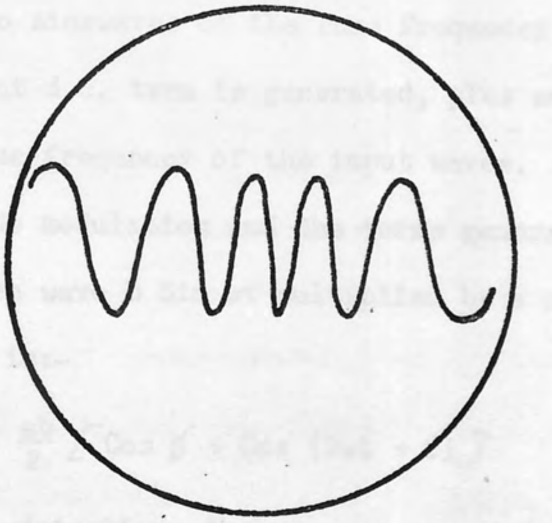

Fig. 3·4

This signal represented a simulation of the signals which were to be derived later with a rotating mirror system. The signal facsimile was used to facilitate development of electronic phase and amplitude detectors.

Amplitude detection is straightforward, consisting basically of three stages:-

(a) Amplification;

(b) Rectification;

(c) Analogue (voltmeter) or digital (thresholding) measurement of d.c. voltage.

Phase detection demands more sophisticated circuiting and was for this reason given prior attention. Phase must be measured in relation to a standard or reference waveform. There are basically two approaches to comparing the signal with a reference wave, both require the following conditions to be satisfied:-

(a) The shape of both reference and signal waveforms should be sensibly the same.

(b) Their frequencies should be in synchronism.

(c) Their amplitudes should be constant.

3.3 Two Phase Detection Systems

3.3.1 Homodyne Mixing

This is essentially the multiplication of signal and reference waves. When two sinewaves of the same frequency are multiplied together, a phase dependent d.c. term is generated, plus an a.c. term whose frequency is twice the frequency of the input waves. The process is essentially amplitude modulation and the terms generated are sidebands. Consider a reference wave b Sin wt multiplied by a signal a Sin (wt + ϕ). The product is:-

$$\frac{ab}{2}\left[\mathrm{Cos}\,\phi + \mathrm{Cos}\,(2wt + \phi)\right]$$

In phase detection, the a.c. component is filtered out and the d.c. used as a measure of phase.

Experimental Detail: A pentode valve was used in homodyne mode in the circuit shown in Fig. 3.5. The circuit components were mounted on a small chassis. Signals from two sine wave generators, set at the same frequency, were fed onto pentode grids g_1 and g_3. Slow beating occurred enabling the maximum and minimum values of anode current to be measured. Values of anode currents were measured for various frequencies up to 1000 c.p.s. The results obtained are given in TABLE 3.1.

The average swing between maximum and minimum values of anode current was approximately 2 m.a. This represents a difference in voltage across the anode load of about 16 volts, between in phase and out of phase.

3.3.2 Addition

The signal interferes with the reference; the amplitude of the resultant waveform is dependent on the relative phase between the interfered waves.

Experimental Detail: A circuit for performing additions, shown in Fig. 3.6 consisting of two pentodes having a common load resistance, was designed and built. Tests were made feeding in two signals of the same frequency from two sine wave generators into the two inputs respectively.

The circuit in this configuration is symmetrical, thus providing a well matched input pair. The resultant a.c. voltage at the anode was displayed on a cathode ray oscillascope and the 'beats' clearly observed, i.e. the amplitude reached a maximum indicating the in phase position, and falling to zero out of phase.

3.3.3 Relative Merits

The homodyne mixer has the attraction of self rectification, that is, the phase signal appears as a d.c. voltage at the anode. The disadvantages are: the badly mismatched inputs, an input voltage ratio of 20:1 was required in the circuit that was tested; a transistor version would be considerably more complicated to design.

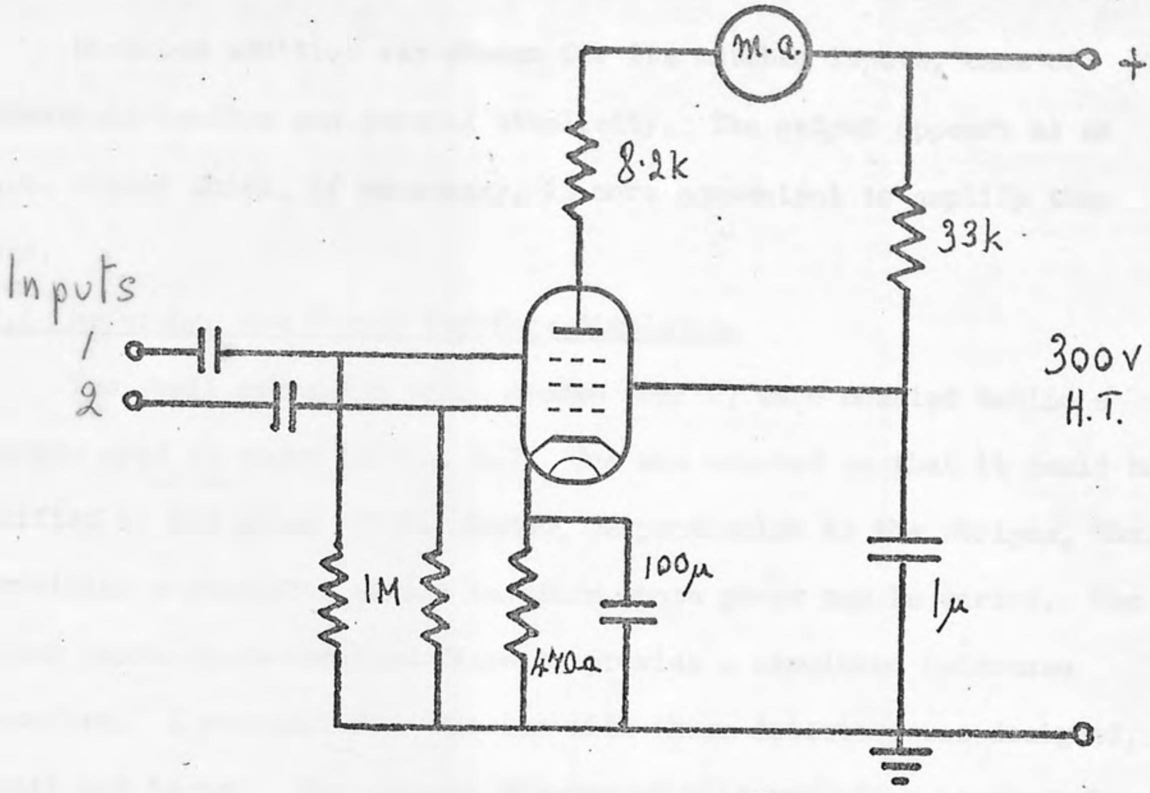

Fig. 3·5 Homodyne Mixer

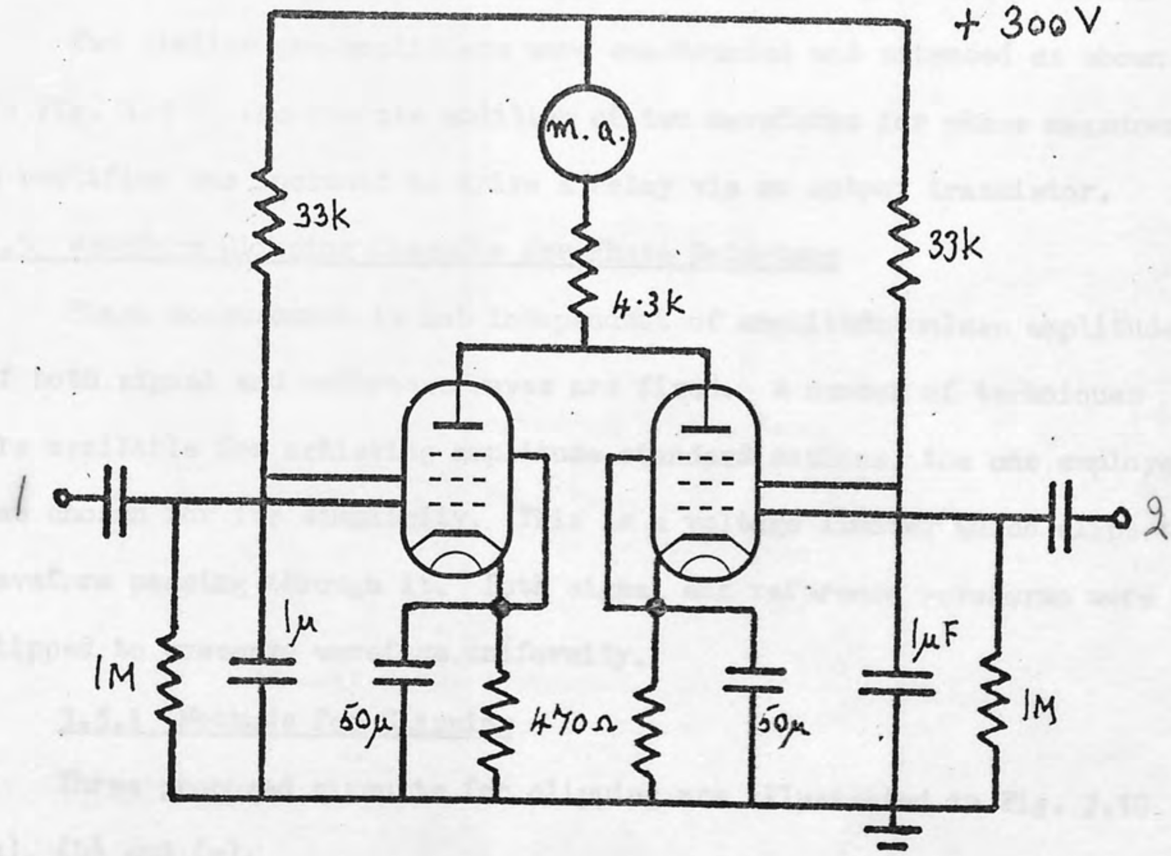

Fig. 3·6 Waveform Addition Circuit.

Waveform addition was chosen for its matched inputs, ease of transistorisation and general simplicity. The output appears as an a.c. signal which, if necessary, is more convenient to amplify than d.c.

3.4 Reference and Signal Waveform Simulation

Two small germanium photo-diodes (OAP12) were mounted behind a single grid as shown in Fig. 3.7. One was mounted so that it could be shifted in the plane of the shadow, perpendicular to the stripes, thus providing a simulated signal waveform whose phase may be varied. The other photo-diode remained fixed to provide a simulated reference waveform. A pre-amplifier for use with these detectors was designed, built and tested. The circuit diagram of this amplifier is shown in Fig. 3.8. The peak to peak a.c. output voltage obtained from the amplifier, using the moving oscillascope spot and grid, was in the order of half a volt. Steps were taken to eliminate mains pickup hum. This consisted of screening the photo-diodes and providing screened cable.

Two similar pre-amplifiers were constructed and extended as shown in Fig. 3.9 to incorporate addition of two waveforms for phase measurement. A rectifier was included to drive a relay via an output transistor.

3.5 Waveform Clipping Circuits for Phase Detectors

Phase measurement is not independent of amplitude unless amplitude of both signal and reference waves are fixed. A number of techniques are available for achieving amplitude standardisations, the one employed was chosen for its simplicity. This is a voltage limiter which clips the waveform passing through it. Both signal and reference waveforms were clipped to preserve waveform uniformity.

3.5.1 Methods for Clipping

Three proposed circuits for clipping are illustrated in Fig. 3.10 (a), (b) and (c).

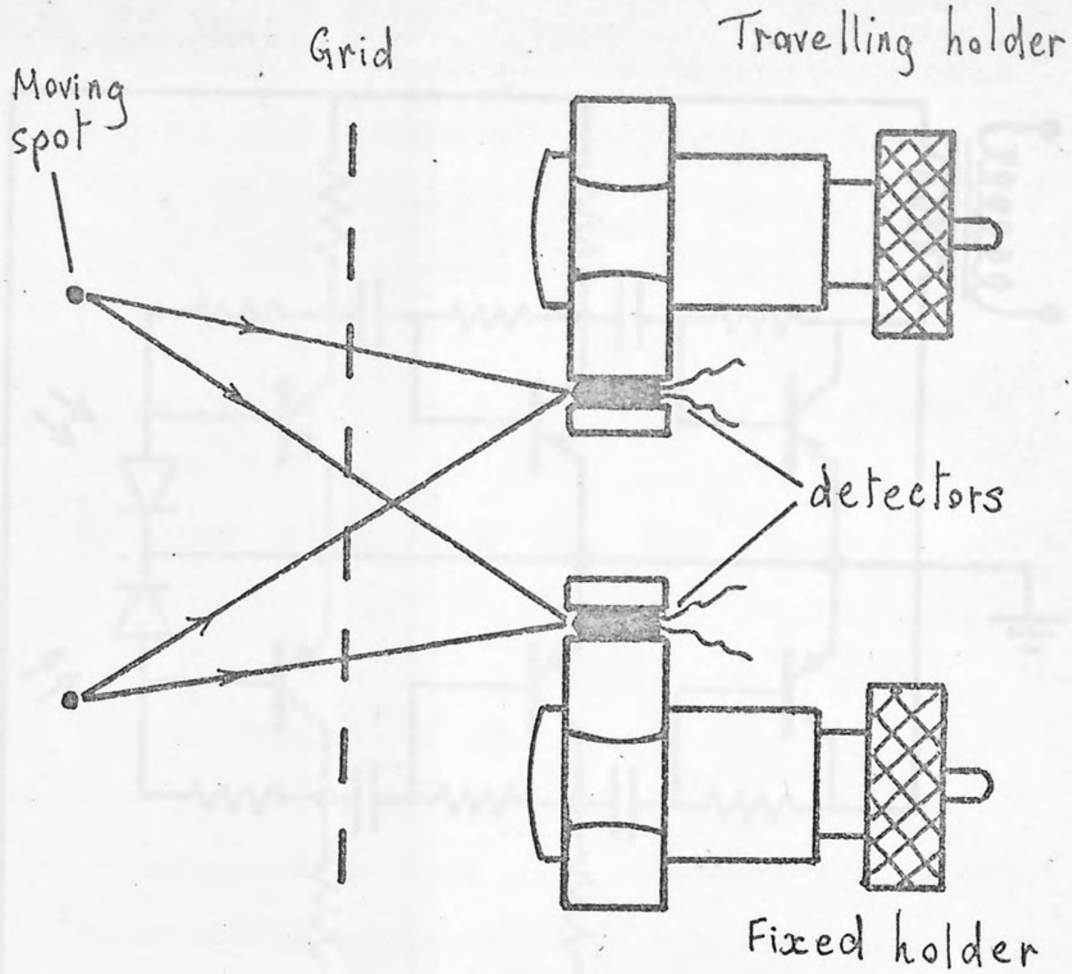
Moving spot
Grid
Travelling holder
detectors
Fixed holder

Fig. 3·7

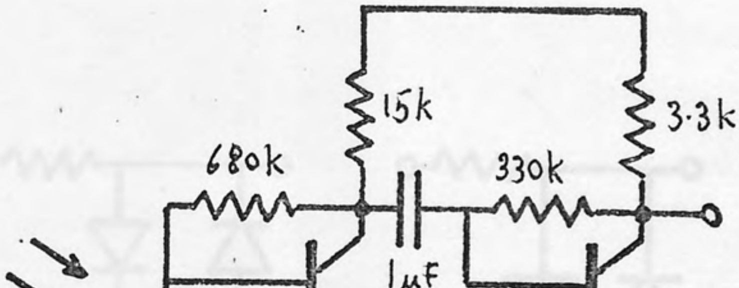
15k
3·3k
680k
330k
1μF

Fig. 3·8

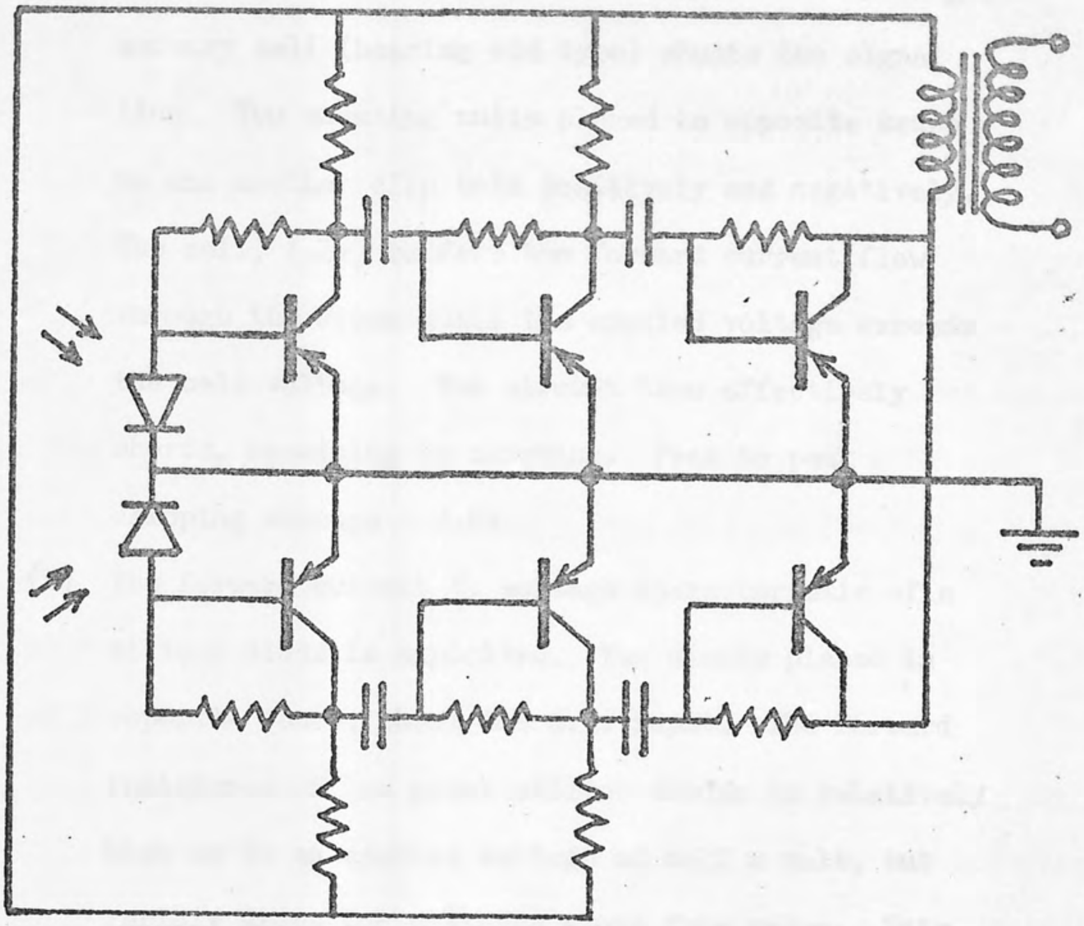

Fig. 3.9

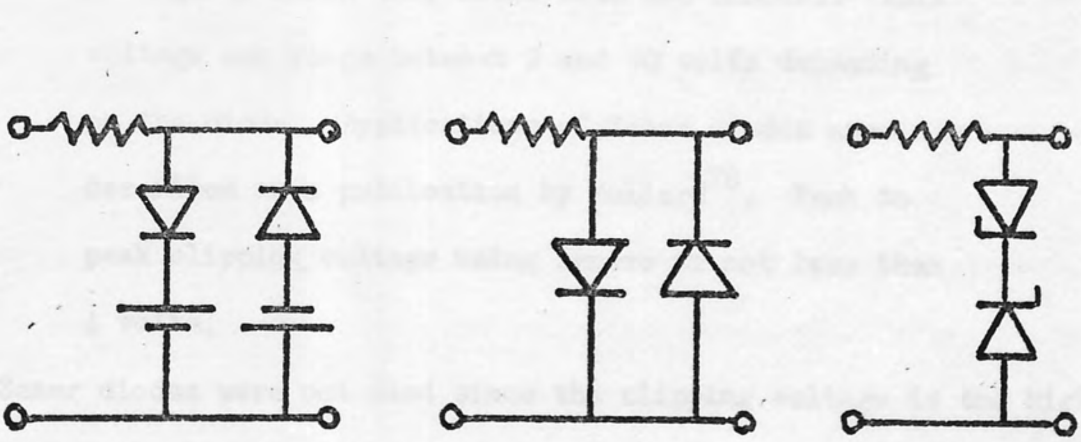

(a) (b) (c)

Fig. 3.10

(a) A germanium or silicon diode in series with a single mercury cell (hearing aid type) shunts the signal line. Two shunting units placed in opposite sense to one another clip both positively and negatively. The cell, 1.4v, buffers the forward current flow through the diode until the applied voltage exceeds the cell voltage. The circuit then effectively shorts, resulting in clipping. Peak to peak clipping voltage = 2.8v.

(b) The forward current V. voltage characteristic of a silicon diode is exploited. Two diodes placed in opposite sense, shunt the a.c. input. The forward resistance of low power silicon diodes is relatively high up to an applied voltage of half a volt, but rapidly drops for voltages above this value. This results in a peak to peak clipping voltage of about 1 volt.

(c) Two Zener diodes in series together shunting the input have a clipping action. Zeners have a reverse voltage at which they break down and conduct. This voltage can range between 2 and 50 volts depending on the diode. Applications of Zener diodes are described in a publication by Mullard[76]. Peak to peak clipping voltage using Zeners is not less than 4 volts.

Zener diodes were not used since the clipping voltage is too high and requires amplification of the signal well in excess of this. Silicon diode clipping level is ideal but its clipping efficiency is poor. Clipping level varies slightly with input amplitude. Germanium diodes backed by mercury cells were used in the prototype circuit as a compromise. Silicon diodes, however, were used in later designs.

Clipping distorts the waveform by introducing harmonics, but was not considered troublesome for phase measurement. This was later confirmed when phase discrimination was successfully achieved.

3.6 Phase and Amplitude Detection Circuit

The first circuit built for phase and amplitude discrimination was crude in design. No negative feedback loop was provided and no allowance was made for the increased amplitude of the signal after each stage of amplification. The circuit, a diagram of which is shown in Fig. 3.11, performed successfully and operated a pair of relays acting as thresholding devices. The relays were later replaced by a Schmitt trigger. Schmitt trigger design is dealt with in chapter 4.

3.7 Edge Error

As described in 3.2, light intensity of a bright spot on a CRT screen is modulated by virtue of placing a grid between the detector and the moving illuminated spot. The simple harmonic motion of the spot over the screen modulates the phase of the intensity modulation. This does not seriously disrupt phase measurement since the reference wave is likewise modulated. Error in amplitude and phase measurements were caused when the CRT trace was shifted sideways slightly on the screen or reduced in width. This alters the waveform shape only in positions corresponding to the spot being in the regions at either end of its travel or trace. The shape of the waveform corresponding to the spot travelling within the central region of the trace remains unaltered. Understandably, the effect imparts more error on phase readings than amplitude since it causes shape mismatching between the signal and reference waveforms. Error in amplitude could be attributed to poor frequency response in amplification.

Some assessment of error in phase was made by noting fluctuations in rectified output voltage whilst moving the position of the trace slowly across the screen for different trace widths and phases. Fig. 3.12 shows a graph of phase voltage plotted against mean fluctuations. The error is more apparent in the out of phase position (antiphase).

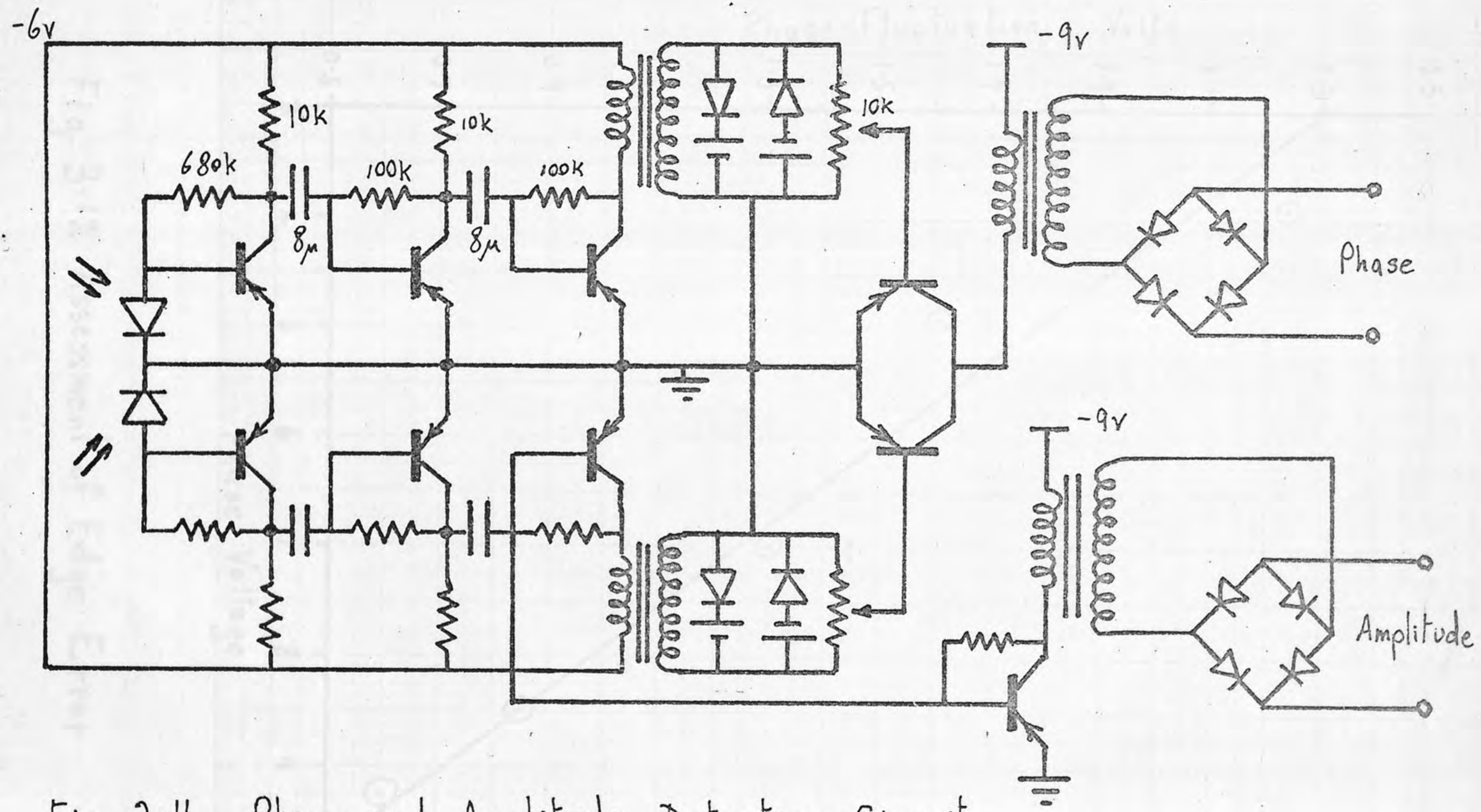

Fig. 3·11 Phase and Amplitude Detection Circuit

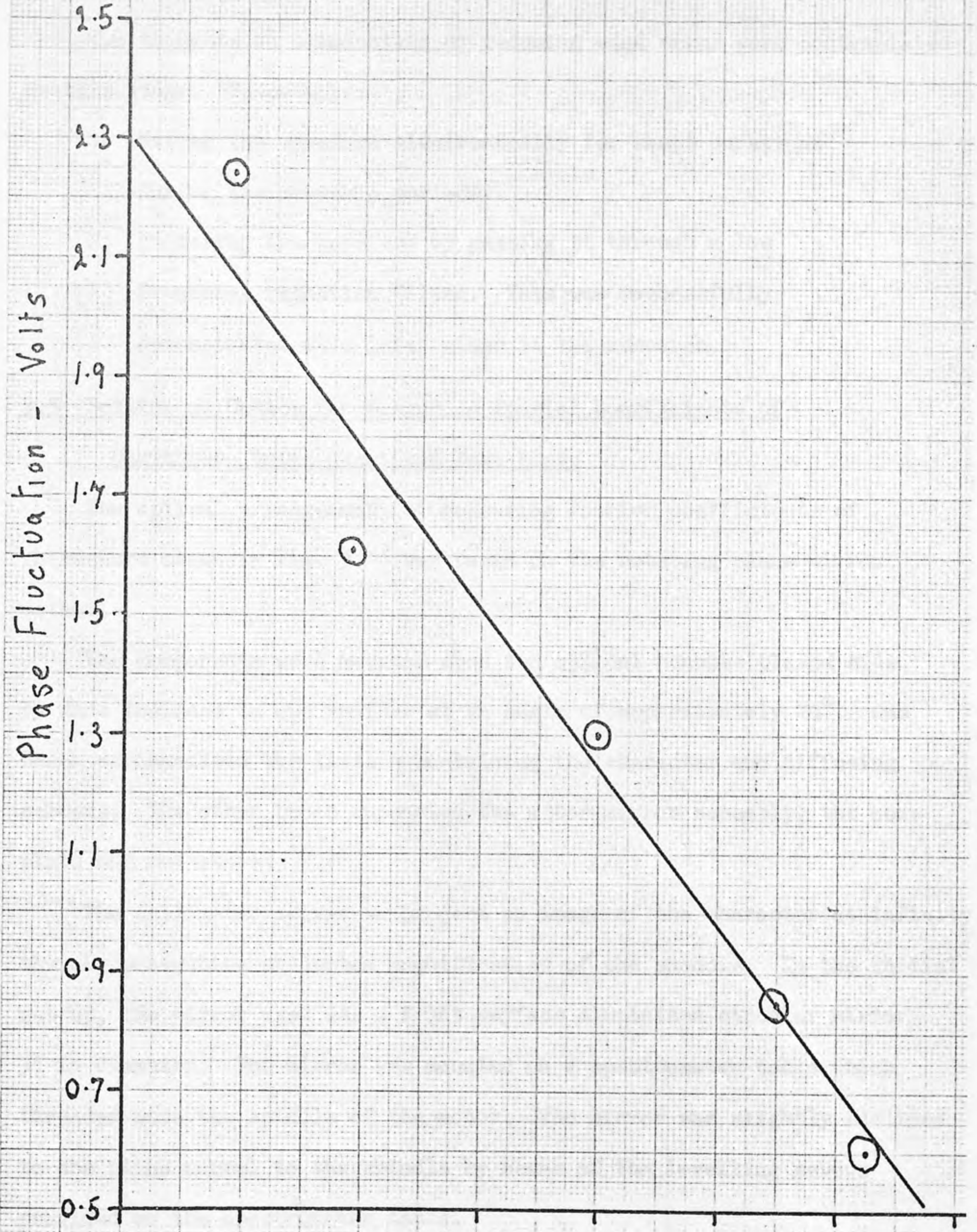

Fig. 3.12 Assessment of Edge Error

Two thoughts on eliminating or reducing edge error were contemplated at this stage. These were:-

1. Gating the waveform electronically for short durations during the unstable periods.
2. Filtering the waveform by passing it through a low frequency rejection filter. This was successfully demonstrated at a later stage in the research.

3.8 Setting up Optics for Measuring Fourier Coefficients of Characters Using Quantised Zone Plate

The optical arrangement for measuring Fourier coefficients of characters shown in Fig. 3.13 was based on the rotating plane mirror method.

The components were mounted upon two optical benches placed side by side inclined to one another at an angle of approximately 20°. One bench accommodated the lantern containing the character and diffusing screens. The other bench supported the motor-mirror assembly, the zone plate and detectors.

The collimator served to project an image of the character at infinity thereby preventing projected magnification of the shadows. In the initial set up, the mirror used was a front surface aluminised circular mirror 3" in diameter. The mirror was mounted on a spectrometer table which threaded onto the spindle of the motor. The mirror was slightly inclined to the plane normal to the spindle by means of the levelling screws provided on the spectrometer table.

3.8.1 Motor and Lamp Power Supply

Illumination was provided by a 150w 24v quartz iodine lamp driven by lead acid accummulators.

A d.c. shunt motor was used to rotate the mirror. The field windings were saturated and the speed controlled by varying the current to the

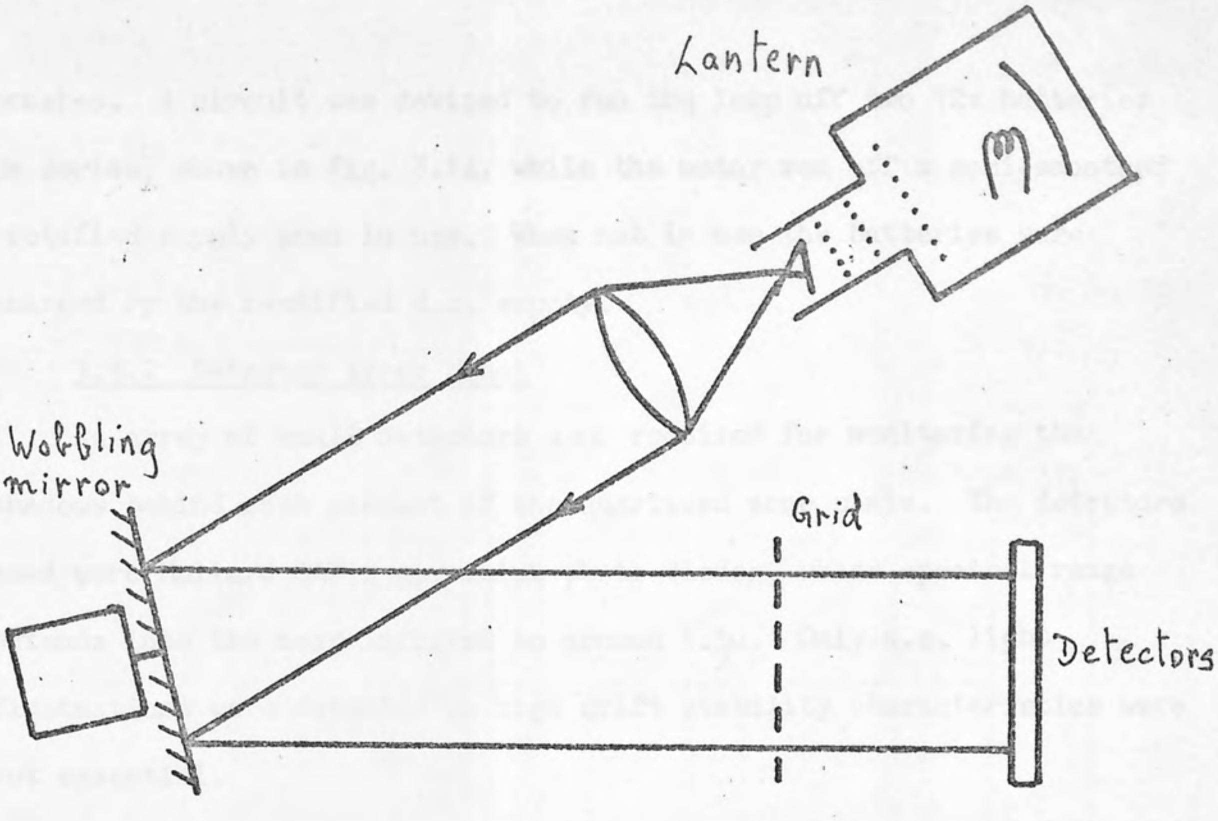

Fig. 3·13

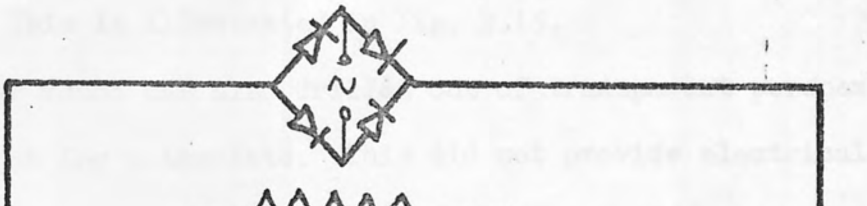

Fig. 3·14

brushes. A circuit was devised to run the lamp off two 12v batteries in series, shown in Fig. 3.14, while the motor ran off a semi-smoothed rectified supply when in use. When not in use the batteries were charged by the rectified d.c. supply.

3.8.2 Detector Array Mount

An array of small detectors was required for monitoring the shadows behind each element of the quartized zone plate. The detectors used were Mullard OAP12 germanium photo-diodes, whose spectral range extends into the near infrared to around 1.5µ. Only a.c. light fluctuations were detected so high drift stability characteristics were not essential.

A composite detector mount was manufactured consisting of an array of holes drilled in a rectangular block of duralumin. The pitch between holes was matched with the pitch spacing between adjacent grids on the zone plate. This is illustrated in Fig. 3.15.

A similar mount was also drilled out of transparent perspex, using the dural mount for a template. This did not provide electrical shielding for the detectors, but the perspex mount proved useful in visual alignment of the detectors with the shadows.

3.8.3 Detector Apertures

Each detector should have an aperture consisting of a slit whose orientation and width is compatible with the grid whose shadow it is to monitor.

It was found that a zone plate identical to the quantised zone plate provided an ideal composite aperture array covering all of the detectors in the shadow plane at once. The advantage of such an aperture mask, apart from being composite and providing the correct spacings and orientations, is that there is not a fall off in light intensity through the finer grids as there would be using single slit apertures.

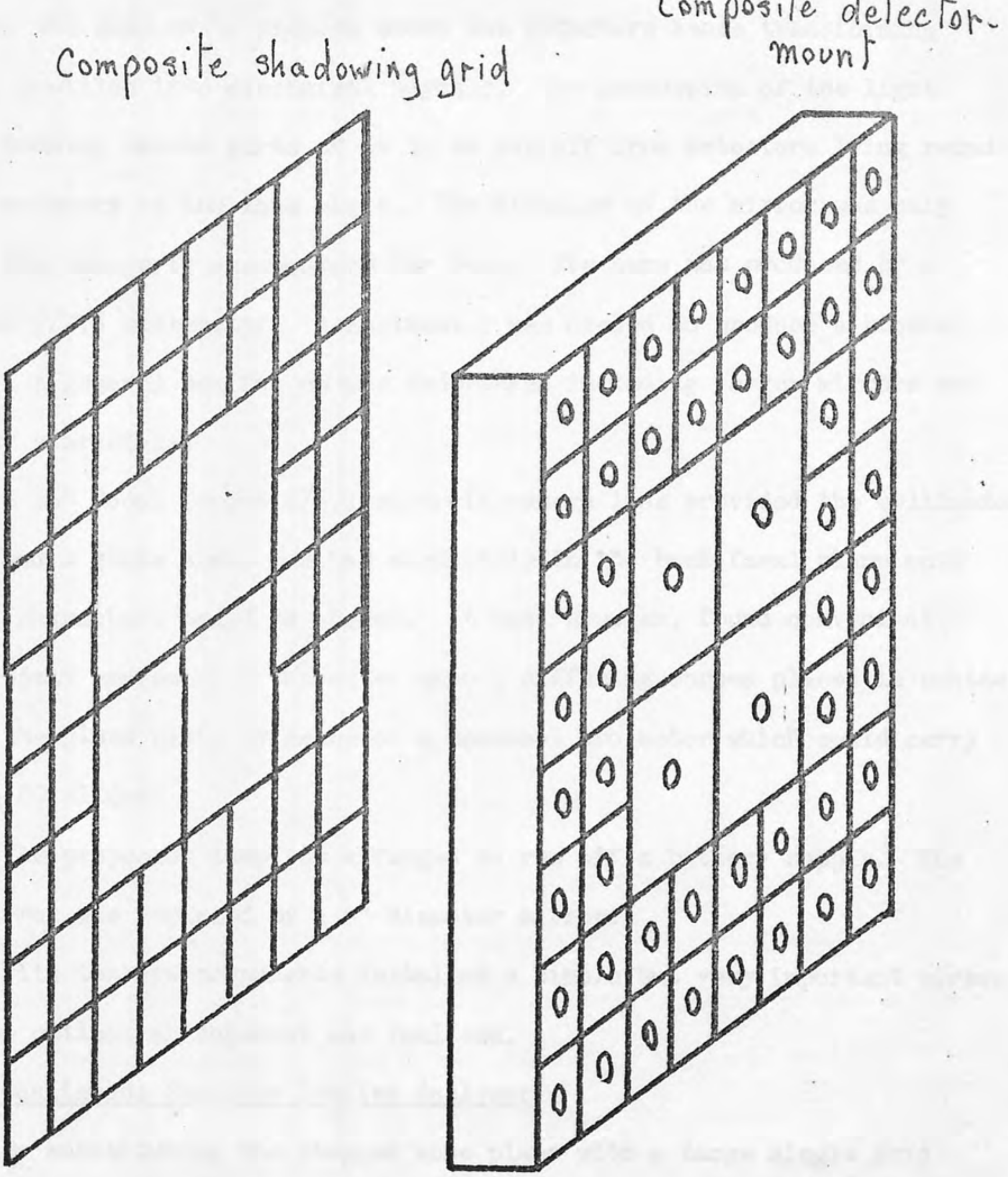

Fig. 3·15

3.8.4 Limitations of the Set Up

When the mirror rotates, the light beam reflected from the mirror surface describes a cone whose apex is at the mirror surface. This causes the shadows to precess about the detectors hence transforming their profiles into electrical signals. The precession of the light beam however caused parts of it to be cut off from detectors lying round the periphery of the zone plate. The diameter of the mirror was only just big enough to accommodate the beam. The beam was produced by a 7 inch f/2.5 collimator. A collimator was needed to produce a broader beam. A general scaling up was undertaken including larger mirrors and larger characters.

A 36" focal length f/6.3 aircraft camera lens provided the collimator. This had a glass plate mounted accurately in the back focal plane onto which characters could be placed. It was, however, found convenient to project images of a character onto a diffusing screen placed in contact with the glass plate by means of a carousel projector which could carry up to 80 slides.

The projector lamp was arranged to run off a battery supply. The 3" mirror was replaced by a 6" diameter mirror.

With the new components installed a simple but very important virtue of the optical arrangement was realised.

3.9 Continuous Spectrum Fourier Analyser

By substituting the stepped zone plate with a large single grid (10 lines/inch) in a polar holder it was possible to sample a continuous frequency spectrum with a single detector positioned anywhere along the optical bench behind the grid. The sampling angle of the frequency spectrum was determined by the orientation of the grid in the polar holder.

It was now possible to measure Fourier coefficients of characters in a continuous frequency range. Consequently the stepped zone plate was made redundant in the role of collecting data for investigating the information requirements for character distinction.

The distance r between the grid and the detector is directly proportional to the frequency of the Fourier coefficient sample in that plane, and represents the distance r from the origin or zero order frequency to a particular point in the Fourier transform domain Fig. 3.16. The angle θ is determined from the angular position of the grid.

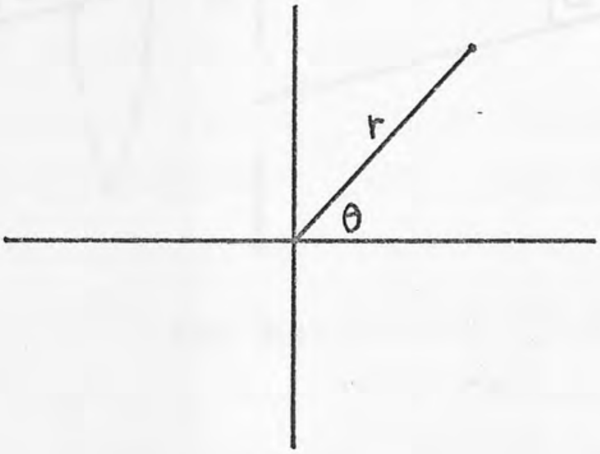

Fig. 3.16

3.9.1 Frequency Calibration of Optical Bench

The collimator makes the continuous spectrum analyser a versatile instrument by preventing projective magnification of shadows in sampling planes behind the grid. It also facilitates calibration of the optical bench in terms of spatial frequencies sampled in characters which interact with the grid in shadow planes behind the grid.

The spatial period, T, being sampled in the back focal plane of the collimator lens, focal length f, subtends an angle α at the lens where $\alpha = T/f$ radians. Similarly if d is the spatial separation of lines in the grid and r is the distance between the grid and the detector plane, a distance d in the grid must subtend the same angle, α , at the detector, for the grid to interact with the period T in the object. Thus:

$$T = \frac{df}{r} \quad \text{Or the sampling frequency} = \frac{r}{df}$$

This is illustrated in Fig. 3.17.

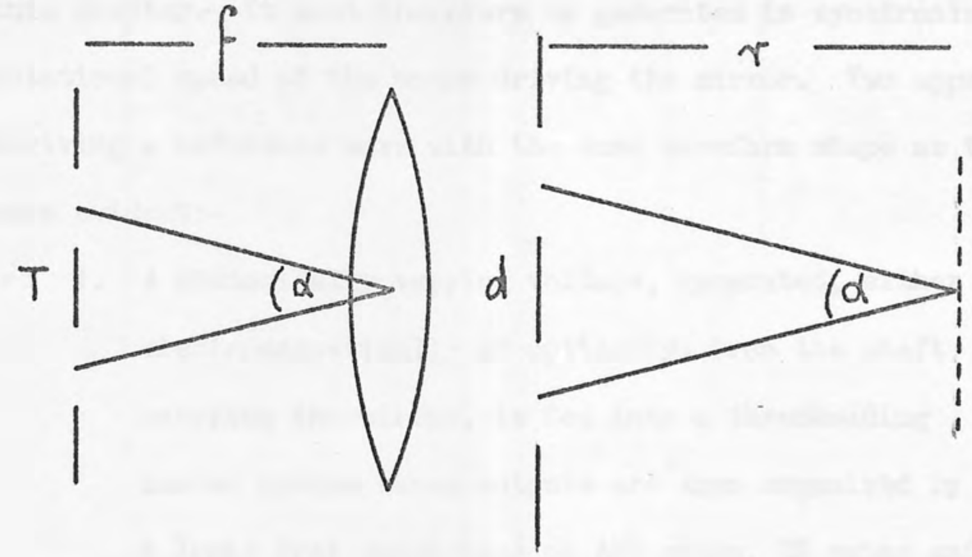

Fig. 3.17

Two basic ways of sampling the continuous spatial frequency spectrum, for assessing the potential of Fourier coefficients as features in character recognition, were available. These were:-

(i) Collect data systematically at preselected discrete sampling frequencies, or

(ii) chart continuous spectrums over the range of the bench by means of a pen recorder linked with a detector mounted on a trolley which traverses the optical bench at uniform velocity.

The latter was tested and found to provide a good visual comparison between spectra of characters, but was not developed. The former provided information in a form suitable for computer analysis and was favoured for this reason.

3.9.2 Generating a Reference Wave for Phase Measurement

A reference wave must conform to the conditions quoted in 3.2 of this chapter. It must therefore be generated in synchronism with the rotational speed of the motor driving the mirror. Two approaches for deriving a reference wave with the same waveform shape as the signal were evident:-

1. A sinusoidally varying voltage, generated, either electromagnetically or optically, from the shaft carrying the mirror, is fed into a thresholding ladder system whose outputs are then organised by a logic tree consisting of AND gates, OR gates and INVERTERS arranged in the configuration shown in Fig. 3.18. The output is a square topped waveform exhibiting sinusoidal frequency modulation which is characteristic of the signal waveform.
   This system has the distinct disadvantage that the number of waves per cycle of the mirror would have to be matched with the number of waves per cycle of the mirror in the signal at every sampling frequency in the spectrum.
2. Optical Reference Beam. In this system an optical reference beam is transmitted together with the signal beam by the collimator, but being made separable by either polarising the two beams at 90° to each other or transmitting the beams in two different spectral regions using complementary filters. Ideally the reference beam emanates from a point source centrally located within the character frame in the back focal plane of the collimator.

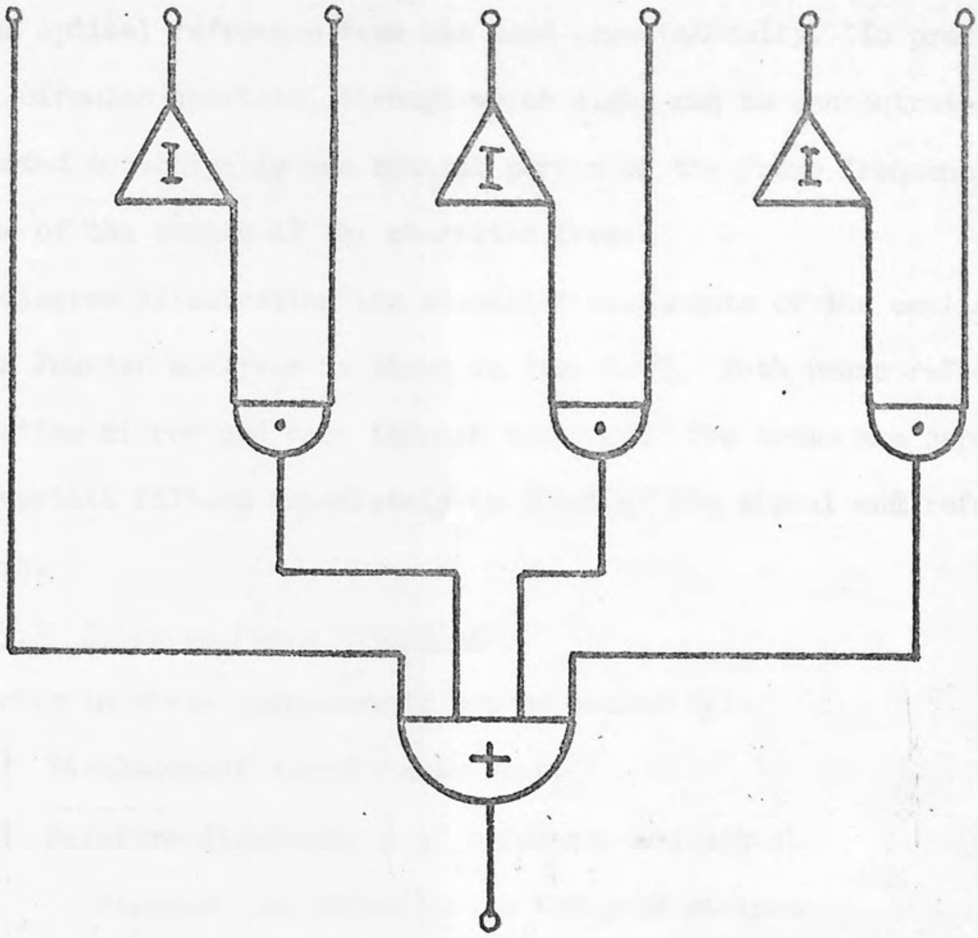

Fig. 3.18 Logic circuit for generating reference waveform

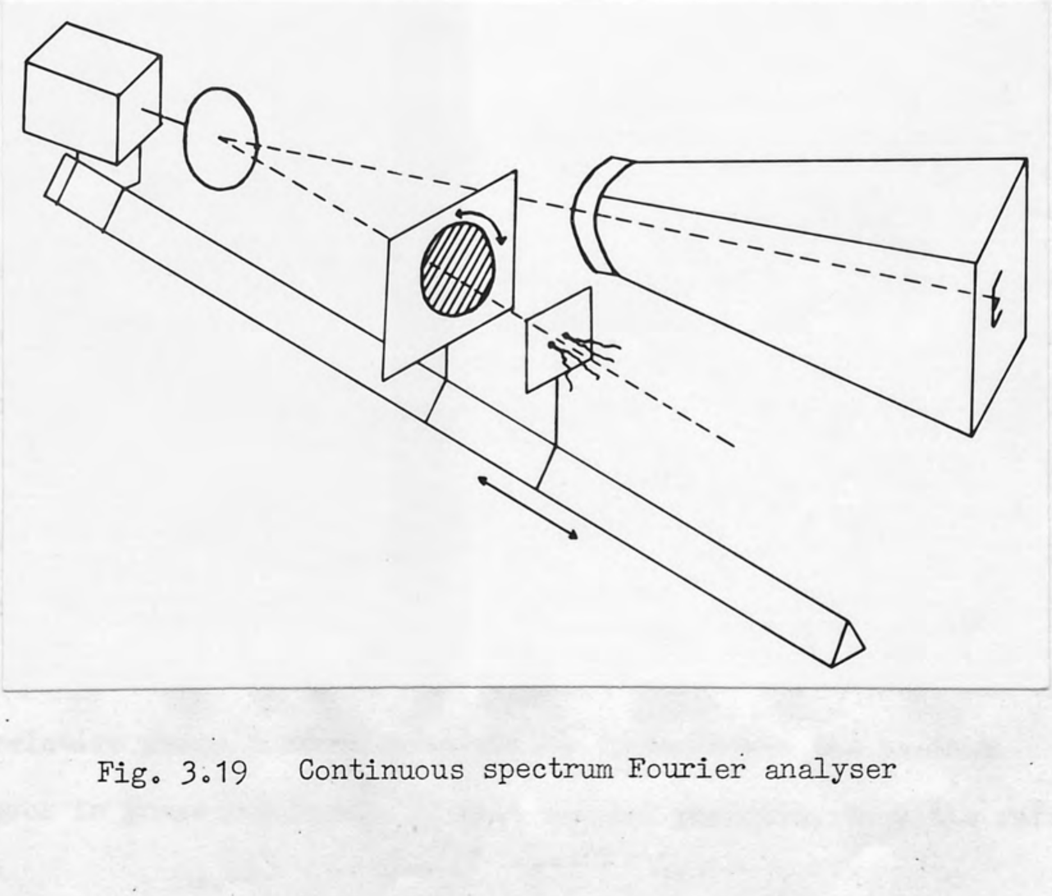

Fig. 3.19 Continuous spectrum Fourier analyser

The optical reference beam was used experimentally. In practice a small circular aperture, through which light can be concentrated, was located conveniently one spatial period of the frame frequency to one side of the centre of the character frame.

A diagram illustrating the essential components of the continuous spectrum Fourier analyser is shown in Fig. 3.19. Both beams reflect off the rotating mirror and pass through the grid. The beams are separated by appropriate filters immediately in front of the signal and reference detectors.

3.9.3 Notes on Phase Recording

Errors in phase measurements can be caused by:-

(a) Displacement of reference spot.

(b) Relative displacement of reference and signal detectors perpendicular to the grid stripes.

(c) Displacement of character in the focal plane of the collimator.

Errors due to these factors become progressively worse, the higher the spatial frequency is tuned into by the grid.

In character recognition, relative phase between character pairs is the all important quality. Relative phase measurements were made by having one moveable detector and the other fixed. The first character of a pair to be distinguished was displayed and phase adjusted for either a maximum or minimum response by shifting the position of the moveable detector. The second character was then displayed and the phase response noted. This then records relative phase between pairs of characters and is only useful if: when one character is set for minimum response, the other character yields a well marked maximum response. The criterion chosen for the distinction of a pair of characters by phase was that their relative phase separation should be π to obtain the maximum difference in phase response. If this was not possible, then the reference detector could be set in such a position as to provide maximum expansion of the phase separation in terms of output response.

3.9.4 Revised Circuits for Amplitude and Phase Detection

Revision of the electronic circuitry using the continuous spectrum test bed, was found to be desirable for several reasons: Apart from general refinement, the amplifiers were required to have a reasonably flat frequency response over the range 50 - 5000 Hz, since the temporal light intensity modulation at the detectors is proportional to the spatial sampling frequency. Higher gain amplifiers were necessary to ensure efficient clipping for phase detection. A circuit of the revised amplifier is shown in Fig. 3.20.

Similar amplifiers are used to amplify both signal and reference waveforms. An audio intervalve transformer was used, as an output step-up transformer, whose secondary windings drive either a rectifier for a smoothed d.c. output, or a waveform clipping circuit prior to phase detection depending upon whether amplitude or phase information is required.

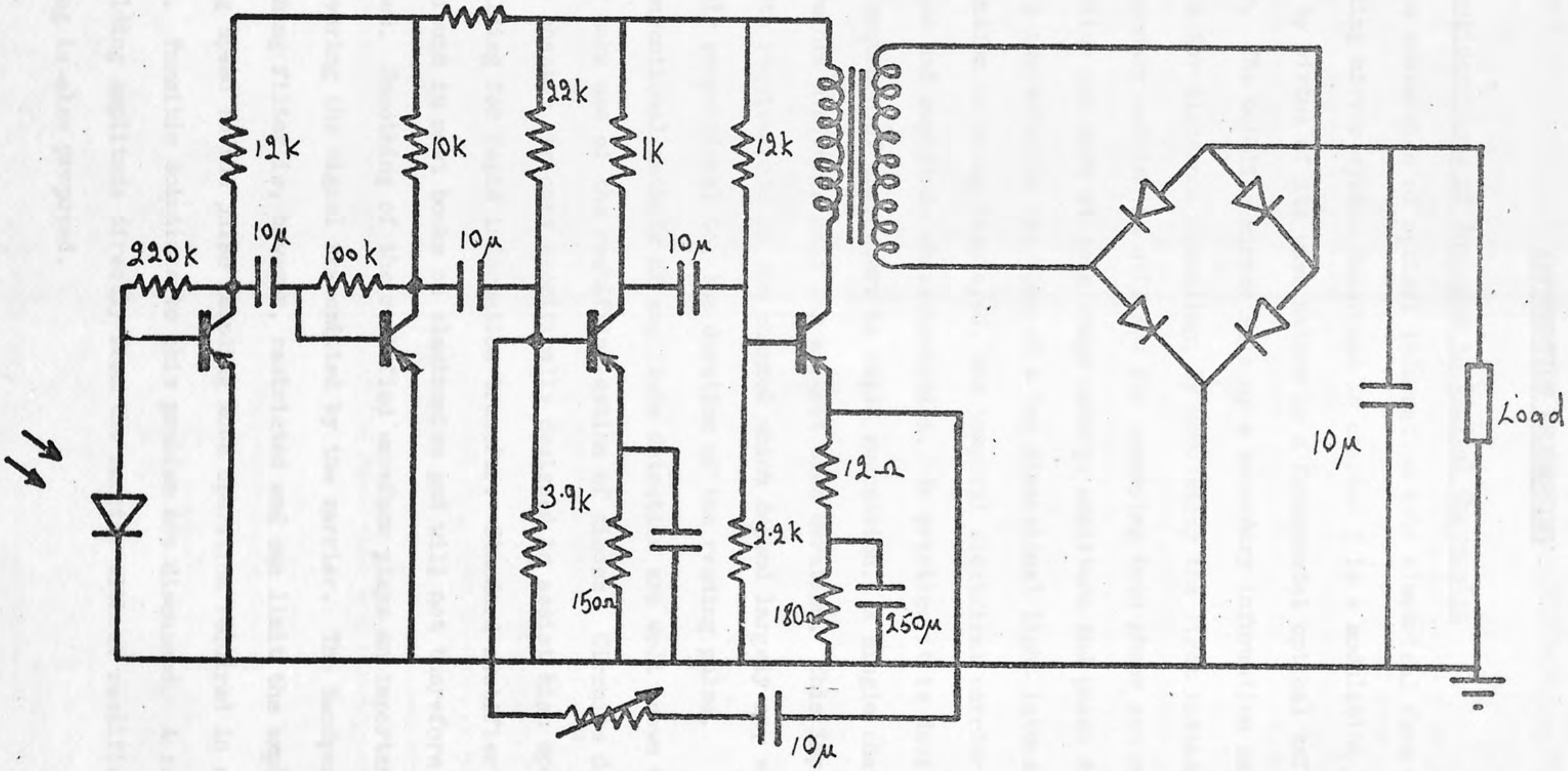
220k
12k
10μ
100k
10k
10μ
22k
1k
10μ
12k
3·9k
150Ω
9·2k
12Ω
180Ω
250μ
10μ
10μ
Load

Fig. 3·20

CHAPTER 4

INFORMATION PROCESSING

4.1 Considerations of Analogue to Digital Conversion

The conversion of optical information into electrical form using a wobbling mirror system described in chapter 3 is a modulation process. Light, by virtue of its wave nature is a fundamental optical information carrier. The wobbling mirror sets up a secondary information carrier, suitable for electronic handling, by modulating the light intensity. The secondary carrier is utilised for conveying both phase and amplitude information and must at some stage undergo amplitude and phase detection. Whilst a character in the form of a two dimensional light intensity distribution is being displayed, the temporal electrical carrier retains its phase and amplitude characteristics. In practice it is desirable to read a sequence of characters in rapid succession. A single character is therefore available only for a short time duration. This imposes bandwidth requirements on the channel which depend largely on, and is inversely proportional to, the duration of the reading pulse.

Conventional methods of amplitude detection are well known and usually make use of the rectifying action of diodes. Circuits described in this chapter are ones specifically designed to assist high speed thresholding for rapid information transfer. Standard rectifier circuits can be found in most books on electronics and will not therefore be discussed. Smoothing of the rectified waveform plays an important part in recovering the signal transmitted by the carrier. The bandpass of a smoothing filter is, however, restricted and can limit the amplitude sampling speed in the pulse sampling mode operation required in character reading. Possible solutions to this problem are discussed. A scheme for thresholding amplitude directly from the carrier without rectification or smoothing is also proposed.

4.2 Smoothing Circuits

Smoothing the rectified carrier is necessary for efficient thresholding or level discrimination. The most familiar form of smoothing is done by placing a shunt capacitance across the output of the rectifier. The capacitor is charged by the rectified waveform, the voltage across it between waveform peaks is then dictated by the R-C discharge curve. Smoothing becomes more effective for large R-C products and higher frequencies. In Fig. 4.1 the value of R_I is low to ensure rapid charge up of capacitor C for a fast rise time. Discharge is via R_L and is slow for good smoothing.

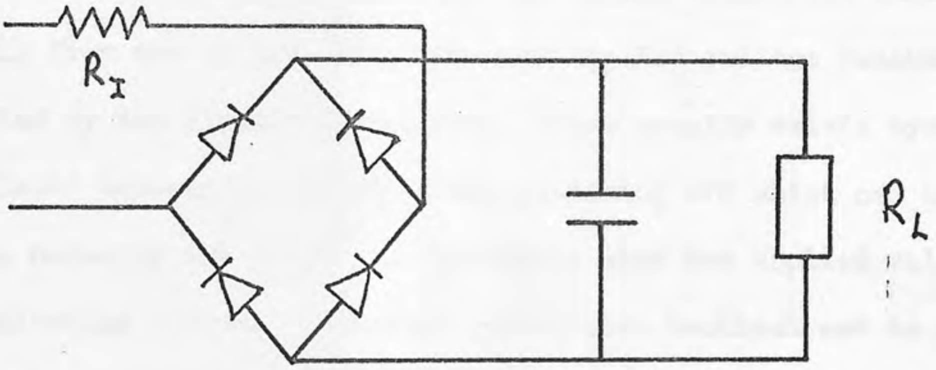

Fig. 4.1

A smooth output and a rapid fall time are both possible by shunting the capacitor with a discharge gate shown in Fig. 4.2. This rapidly discharges the condensor immediately the d.c. voltage has been sampled in preparation for recharging. In a high speed machine clock pulses applied to the gate would be synchronised with the character read rate and subsequent logic circuitry.

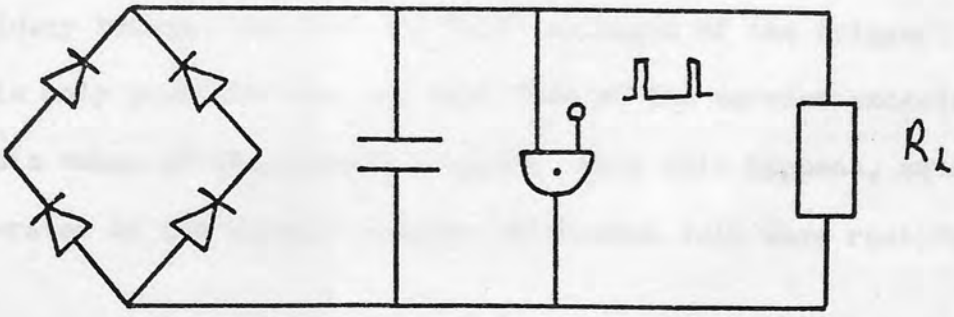

Fig. 4.2

4.2.1 Phase Shift Smoothing

The carrier is tapped off along two lines one of which is fed into a 90° phase shifter. Both waveforms are rectified and then recombined via diodes in OR gate configuration. The diodes in the circuit shown in Fig. 4.3 are used to rectify and recombine to give the output waveform shown in Fig. 4.4 which constitutes ripple on top of the required d.c.

4.3 Level Discrimination or Thresholding

An electronic circuit which can be used to detect whether or not a d.c. voltage is above a given value is the Schmitt trigger. The basic circuit is often embodied in sophisticated integrated comparator circuits. The Schmitt trigger has two stable electrical states and flips rapidly from one to the other when the applied voltage reaches a level dictated by the circuit components. There usually exists hysteresis or "backlash" between switching on and switching off which can be regulated and is normally set to provide stability when the applied voltage is in the switching region. Instability with zero backlash can be due to noise or rectifier ripple. Backlash is particularly useful in combatting the relatively large ripple present when using phase shift smoothing.

High gain integrated operational amplifiers, used in open loop mode, will also serve as level discriminators. Owing to their inherent high gain, their output will saturate positively or negatively according to whether the input voltage is just positive or just negative of zero.

4.3.1 A.C. Level Detection

Here the hysteresis of a Schmitt trigger is utilised for thresholding an a.c. signal prior to rectification. The trigger input is biased so as to be midway between the "on" and "off" voltages of the trigger. A dynamic output is only possible when the amplitude of the carrier exceeds the hysteresis value of the Schmitt trigger. When this happens, square waves are generated by the Schmitt trigger which, when full wave rectified,

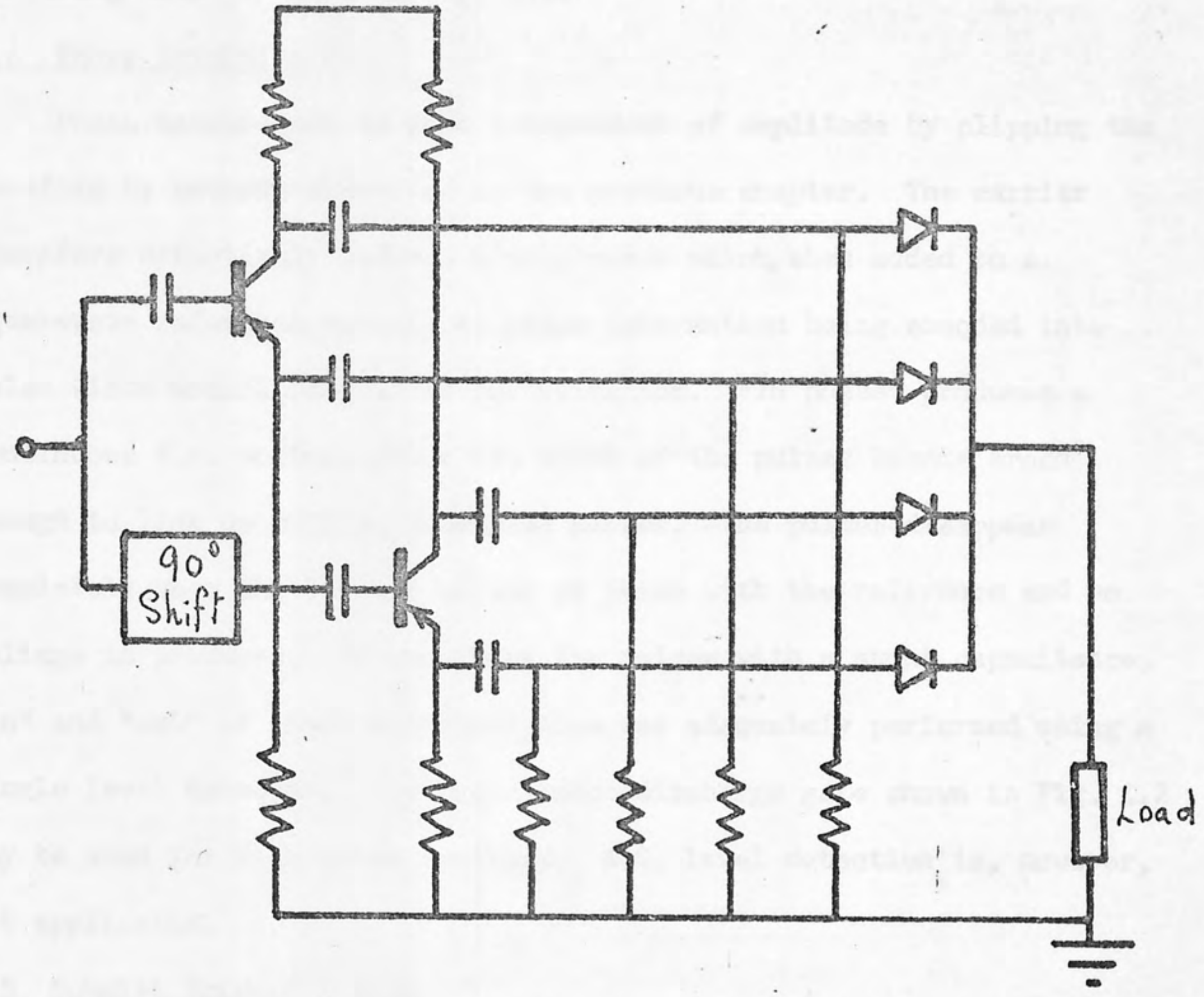

Fig. 4·3 Phase Shift Smoothing Circuit

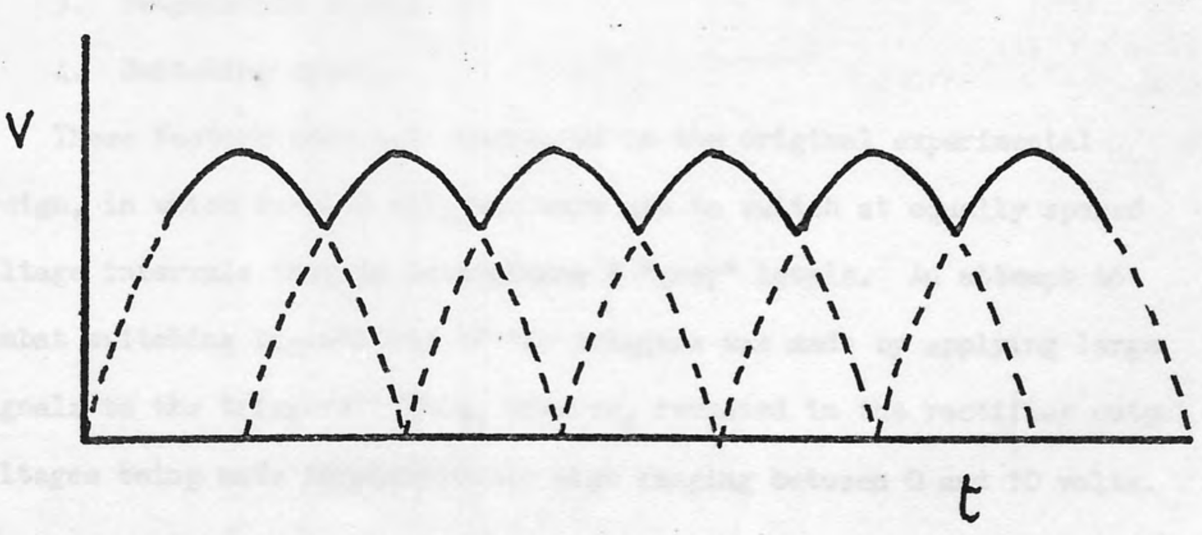

Fig. 4·4

produce a d.c. voltage requiring little or no smoothing. A circuit for doing this is shown in Fig. 4.5.

4.4 Phase Detection

Phase measurement is made independent of amplitude by clipping the waveform by methods described in the previous chapter. The carrier therefore effectively becomes a squarewave which, when added to a squarewave reference, results in phase information being encoded into pulse width modulation, after rectification. "In phase" produces a continuous d.c. voltage since the width of the pulses become broad enough to link up with neighbouring pulses. The pulses disappear completely when the carrier is out of phase with the reference and no voltage is produced. By smoothing the pulses with a shunt capacitance, "in" and "out" of phase discrimination was adequately performed using a single level detector. The capacitance discharge gate shown in Fig. 4.2 may be used for high speed sampling. A.C. level detection is, however, not applicable.

4.5 Schmitt Trigger Design

Factors influencing design of a Schmitt trigger circuit are:-

1. Switching voltages and their tolerances.
2. Hysteresis and its tolerance.
3. Temperature stability.
4. Switching speed.

These factors were not considered in the original experimental design, in which Schmitt triggers were set to switch at equally spaced voltage intervals thereby determining 8 "grey" levels. An attempt to combat switching instability of the triggers was made by applying large signals to the triggers. This, however, resulted in the rectifier output voltages being made inconveniently high ranging between 0 and 10 volts.

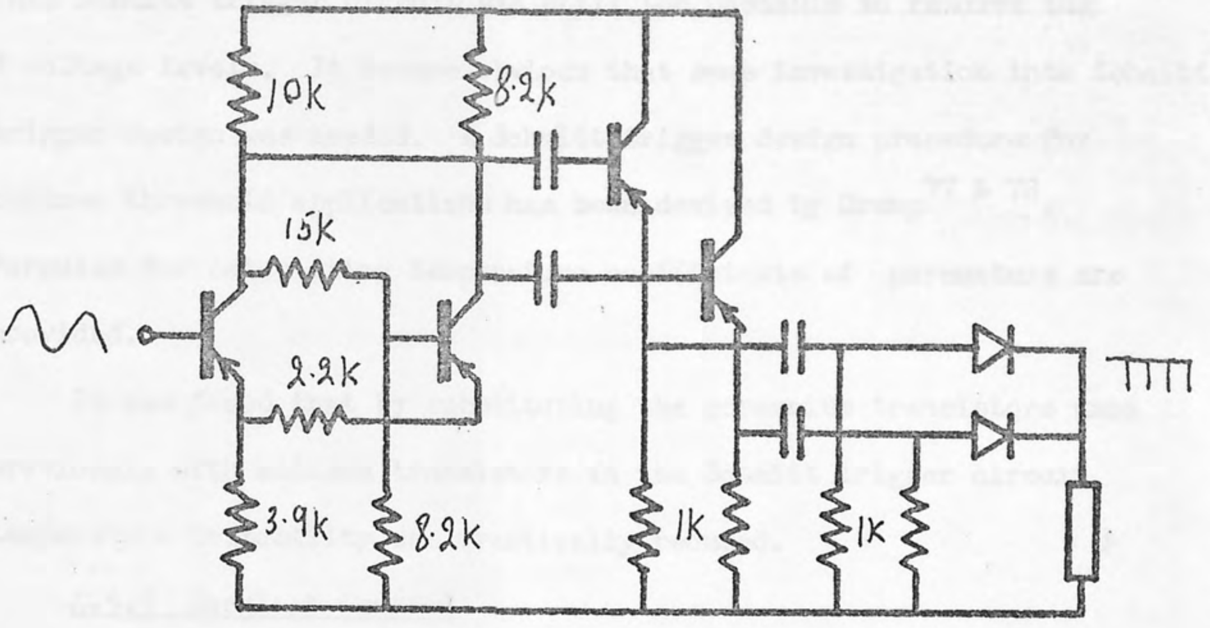

Fig. 4.5 An A.C. Level Detector

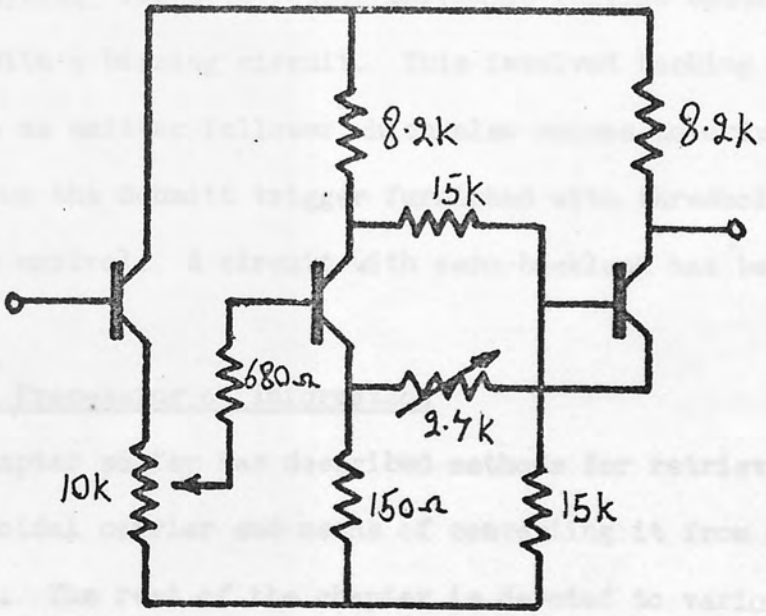

Fig. 4.6 Schmitt Trigger with Threshold Setting Control

This Schmitt trigger circuit was still too unstable to resolve the 8 voltage levels. It became obvious that some investigation into Schmitt trigger design was needed. A Schmitt trigger design procedure for defined threshold applications has been devised by Crump[77 & 78]. Formulae for calculating temperature coefficients of parameters are provided.

It was found that by substituting the germanium transistors used previously with silicon transistors in the Schmitt trigger circuit, temperature instability was drastically reduced.

4.5.1 Backlash Control

The amount of backlash present in a Schmitt trigger is determined by the circuit characteristics and the power supply voltage. A convenient way of controlling the amount of backlash in the trigger is by inserting a variable resister in the emitter circuit of the second transistor. The value of this additional resister also dictates the switching levels. For this reason threshold voltage control was done externally with a biasing circuit. This involved backing the Schmitt trigger with an emitter follower which also serves to drive the trigger. Fig. 4.6 shows the Schmitt trigger furnished with threshold setting control and backlash control. A circuit with zero backlash has been designed by Crump[79].

4.6 Digital Processing of Information

This chapter so far has described methods for retrieving information from a sinusoidal carrier and means of converting it from analogue into digital form. The rest of the chapter is devoted to various aspects and ideas of digital information processing within the context of pattern recognition theory discussed in chapter 1.

Two schemes for digitisation were realised at different stages in the development. Both served pertinent roles. The eight level concept was founded on the necessity to collect abundant information about Fourier coefficients in order to examine their virtues as features in character recognition. The other system based on one bit binary coding (one switch per channel) was devised after assessing information requirements using the 3-bit system. This scheme collects information more efficiently and greatly simplifies the logic circuits.

The 3-bit system consists of two logic layers: the primary logic for converting 8 levels into 3-bit channels; and the secondary decoding logic for recognition. The 1-bit system requires only a decoding or recognition logic whose structure is similar to the secondary logic in the 3-bit system.

4.7 Seven Switch Discriminator

A 7-switch discriminator was conceived for the purpose of providing each channel with a 3-bit information carrying capacity. This is a modest capacity, furnishing an overall system, having say, 10 frequency grids, with a potential 60 bit information carrying capacity. Such a channel is theoretically capable of transmitting 2^{60} different characters if used to its full capacity. This is greatly in excess of the number of characters a machine would be required to recognise. A character reading machine would normally be required to recognise up to about 100 characters.

4.7.1 Eight Level to Three Bit Conversion Logic

The 7 switch discriminator consists of 7 temperature stable Schmitt triggers provided with backlash adjustment control and external bias control. The triggers are tied into a potential divider chain in ladder formation shown in Fig. 4.7. The d.c. analogue signal was applied to the potential divider. The external biasing of the Schmitt trigger was adjusted so that they triggered in sequence at 1 volt intervals of the applied voltage. The signal gain in each channel was adjusted until the d.c. signals, due to a set of characters, ranged between 0 and 10 volts thus taking full advantage of the 7 switches.

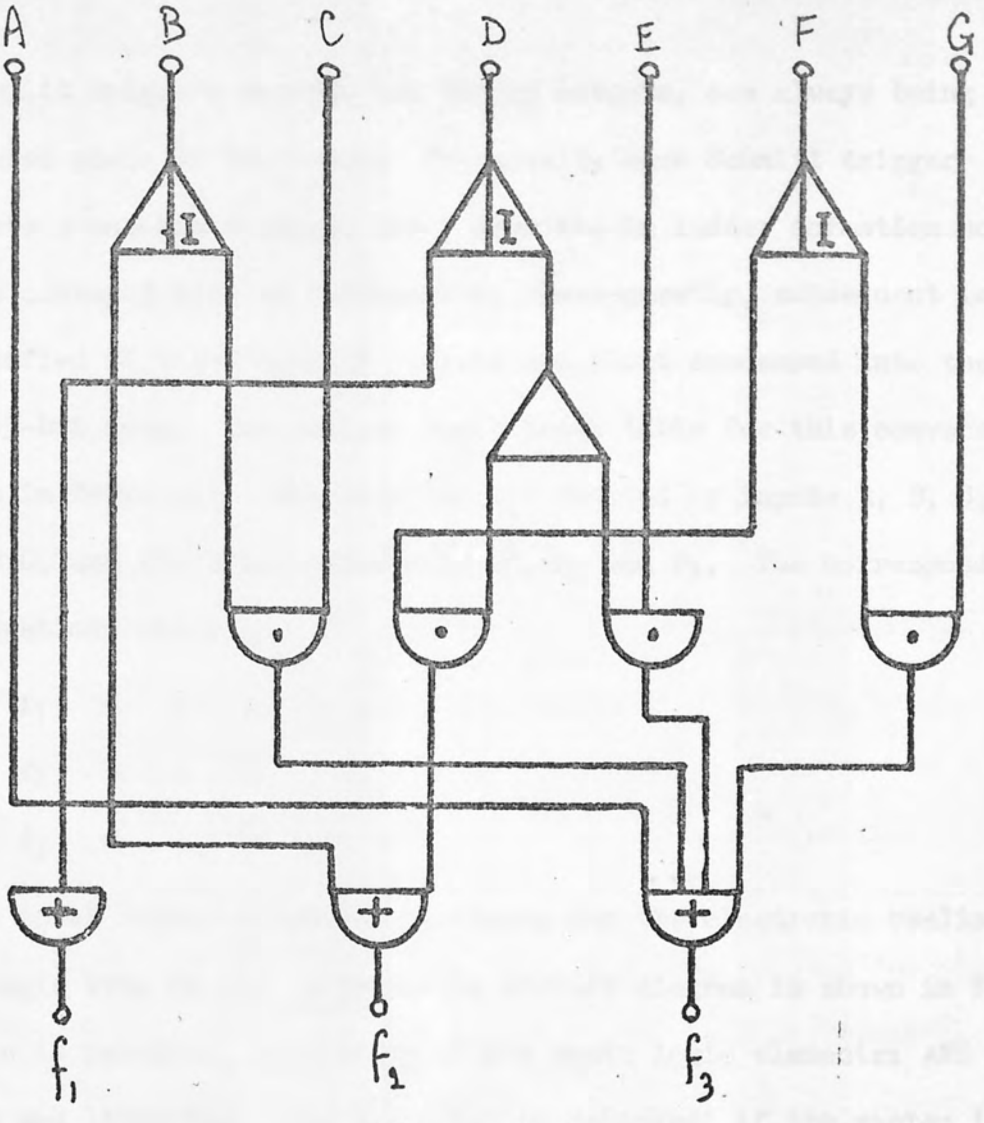

Fig. 4·8

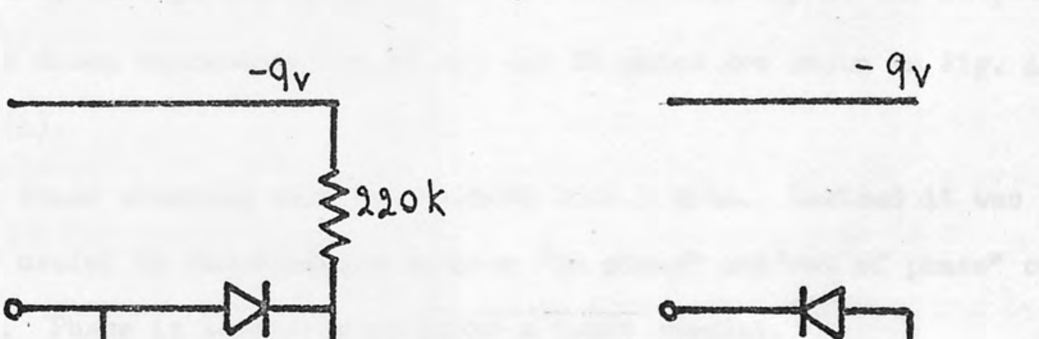

AND
(a)

OR
(b)

Fig. 4·9

Schmitt triggers provide two binary outputs, one always being in the inverse state of the other. Technically each Schmitt trigger represents a one-bit channel, the 7 Schmitts in ladder formation however can only convey 3 bits of information. Consequently, subsequent logic is simplified if the 7 Schmitt outputs are first condensed into their optimum 3-bit form. The Boolean logic truth table for this conversion is shown in Table 4.1. The Schmitts are denoted by inputs A, B, C, D, E, F and G, and the 3-bit outputs by f_1, f_2 and f_3. The corresponding logic equations are:-

$$f_1 = D$$

$$f_2 = B + \overline{D}F$$

$$f_3 = A + \overline{B}C + \overline{D}E + \overline{F}G$$

The total number of diodes necessary for the electronic realisation of the logic tree is 14. A schematic circuit diagram is shown in Fig. 4.8. The logic is parallel, consisting of the basic logic elements: AND gates, OR gates and INVERTERS. The logic may be "clocked" if the system is delay matched, that is f_1, f_2 and f_3 arrive simultaneously at the outputs. The basic diode representation of AND and OR gates are shown in Fig. 4.9(a) and (b).

Phase channels were not encoded into 3 bits. Instead it was thought more useful to discriminate between "in phase" and"out of phase" conditions only. Phase is therefore assigned a 1-bit channel.

Amplitude information expressed by 3 bits and phase information expressed by 1 bit were used experimentally in this form for the purpose of selecting operative Fourier coefficients which would completely recognise a set of characters. Results of these experiments are given in the next chapter.

4.8 Single Switch Discriminator

In this system both amplitude and phase voltages derived from Fourier coefficients are thresholded by single Schmitt triggers thus defining 1-bit channels. Discrimination between high and low voltages only is made, and is indicated by the state of the trigger.

When the requisit number of Fourier coefficients have been found such that the information conveyed by the digital outputs uniquely specifies each character in the set, then a recognition or decoding logic can be contrived.

The Schmitt triggers work is essentially the same mode as in the 3-bit system but a ladder potential divider is, of course, not required. The setting of the trigger voltage level, however, has a more significant function in that it may be biased high or low to assist in recognition. The recognition philosophy of this type of logic is discussed in detail later in this chapter.

4.9 The General Decoding Logic

When sufficient Fourier coefficients have been located for the recognition of a given repertoire of characters, that is, their coded outputs have given rise to a unique set of digital signals, a secondary logic can be set up terminating in lines denoting characters in the alphabet or repertoire.

The general structure of the decoding logic consists of all-to-all cross connections between the coded signal outputs and the outputs proper. Some of the cross connections will be made via inverters, their precise location being determined by the coded signal patterns produced by the characters. The cross connections feed outputs proper via AND gates. A typical decoding logic is illustrated in Fig. 4.10. Normally, not all of the interconnections need be made in practice, because of redundancy in the coded signals.

4.10 Optimal Use of Redundancy in the Digital Channel

Redundancy in a communication channel can be beneficial and used to create error margins which furnish the channel with a degree of noise immunity. It is useful to consider the fundamental nature of characters

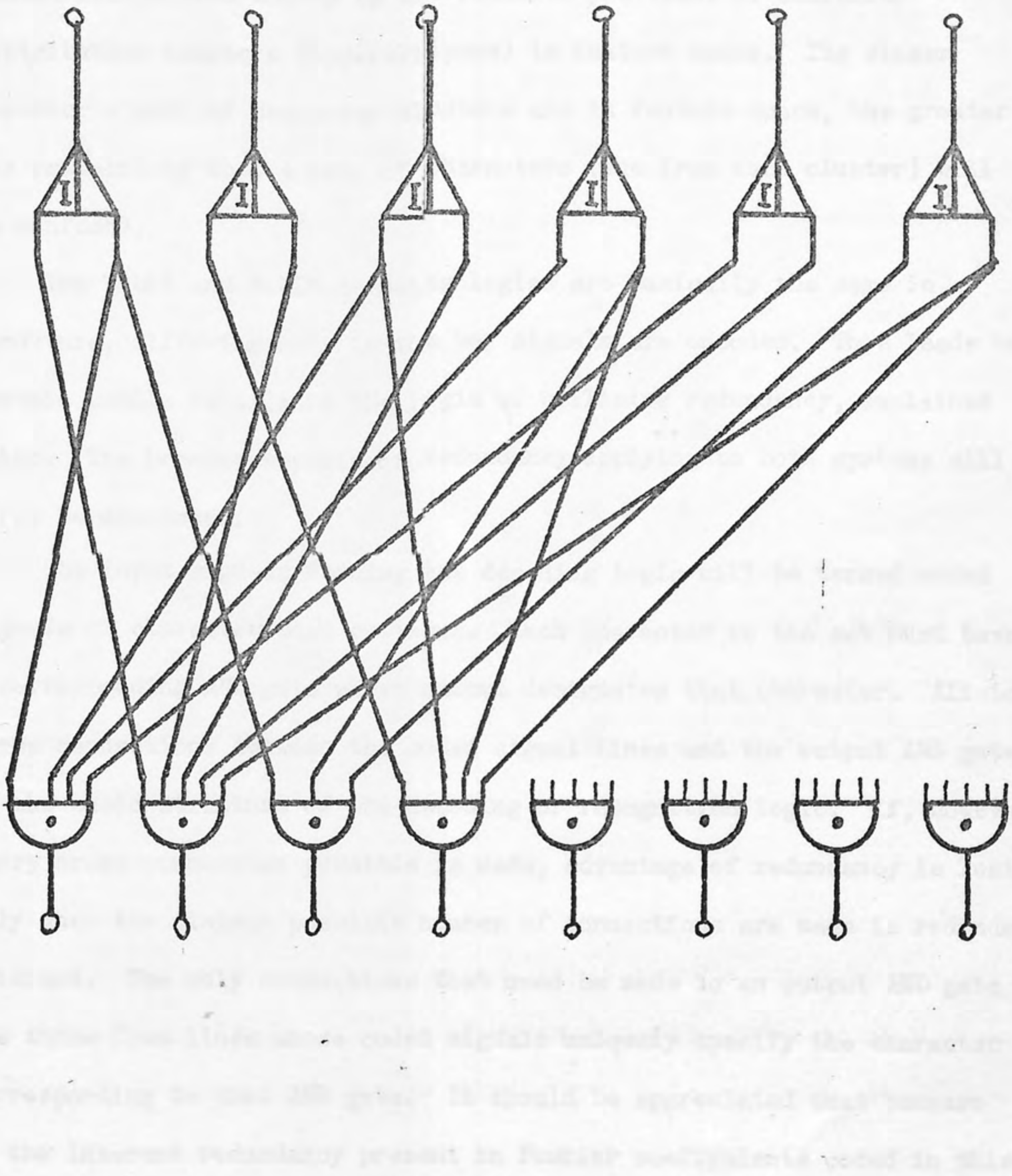

Fig. 4·10 A Typical Decoding Logic

devised by man, within the context of pattern recognition theory, before contemplating a redundancy organising logic. By their very nature some pairs of characters are more distinguishable than others, whether they are read by machine or humans. This is explained in pattern recognition theory by the relative positions of character distribution clusters (hyperellipses) in feature space. The closer together a pair of character clusters are in feature space, the greater the probability that a pair of characters (one from each cluster) will be confused.

The 7-bit and 1-bit decoding logics are basically the same in structure, differing only in the way signals are encoded. This leads to certain subtle details in the logic of utilising redundancy, explained later. The broader aspects of redundancy applying to both systems will first be discussed.

The input signals feeding the decoding logic will be termed coded signals or character code patterns. Each character in the set must have a corresponding AND gate whose output designates that character. All-to-all cross connections between the coded signal lines and the output AND gates is the basic structure of the decoding or recognition logic. If, however, every cross connection possible is made, advantage of redundancy is lost. Only when the minimum possible number of connections are made is redundancy utilised. The only connections that need be made to an output AND gate are those from lines whose coded signals uniquely specify the character corresponding to that AND gate. It should be appreciated that because of the inherent redundancy present in Fourier coefficients coded in this way, not all of the cross connections will be made and therefore certain changes in signals due to noise or instability will not affect recognition. Some character pairs will have more margin of error than others according to their degree of separability. Thus character pairs which can easily be distinguished from one another, will tolerate bigger changes in signal code patterns than pairs which are not easily distinguishable.

4.10.1 Redundancy Logic for the Seven Level System

In the 7 level system coded signals are organised in 3-bit blocks (neglecting the one bit for phase), one block for each Fourier coefficient. The 3 digits within a block are therefore not independent but are related because of the binary coding system. However, the values that the blocks can take on are dictated by values of Fourier coefficients which are primary features for recognition. For this reason, output AND gates should receive connections in threes from the 3-bit blocks. If certain coefficients do not play a part in distinguishing a given character from the rest of the alphabet, then the 3-bit blocks corresponding to those coefficients need not be connected into the AND gate representing that character.

4.10.2 Redundancy Within the 3-Bit Blocks

Simple logic trees can be set up, each being fed by a 3-bit block, to cope with unstable levels which are caused by noise when voltages are close to threshold levels. The logic tree arranges for the same coded signal to appear for either state of the "unstable" threshold device. A general logic may be constructed to cope with analogue signals drifting across either upper or lower threshold voltages defining steps in the thresholding ladder. Such a logic tree would have ramifications to deal with all possible ways that the 3-bit inputs might change with instability. Outputs corresponding to these possibilities would be available if required for connecting into the final recognition AND gates. The precise connection pattern is dictated by values of Fourier coefficients obtained with the characters. This redundancy logic will cope not only with dynamic noise in the electronics but also with spatial noise in the input character including distorted characters.

4.11 Redundancy Utilisation with the One-Bit System

4.11.1 Philosophy of a Dichotomy

The one-bit system implements the dichotomy in character recognition theory in terms of hardware. Regarding amplitudes and phases of Fourier coefficients as features for recognition, a feature space is conceivable whose dimension is determined by the number of Fourier coefficients used. According to theory, character types are represented by hyperelliptical distribution clusters in feature space. The philosophy of the dichotomy lies in constructing decision surfaces between pairs of character clusters. The idea is illustrated in two dimensions in Fig. 4.11. Consider the character pair A and B in 2 dimensional feature space. The decision surface (a line in this case) dichotomiser is defined by disecting, at right angles, the straight line joining the centres of the distribution representing characters A and B. The mid-point between A and B is defined by its projection onto the feature axes. In hardware terms, these points on the feature axes correspond to threshold level settings.

In reality not every plane separating every character pair need be defined. This is because single planes are sufficient to separate many character pairs. The simplest planes are those defined by single threshold levels along feature axes. These planes, intersect the axes at right angles at the threshold points. In feature space of adequate dimensions planes defined by single thresholds will often be sufficient to recognise a character set.

This then is the realisation of the one bit system. Each feature or Fourier frequency is furnished with a single threshold device (a Fourier frequency can actually provide two independent features, amplitude and phase) whose switching value may be preset or weighted to effect optimal recognition of characters. There may be occasion to have more than one threshold device per feature, thus effectively defining two parallel planes in feature space.

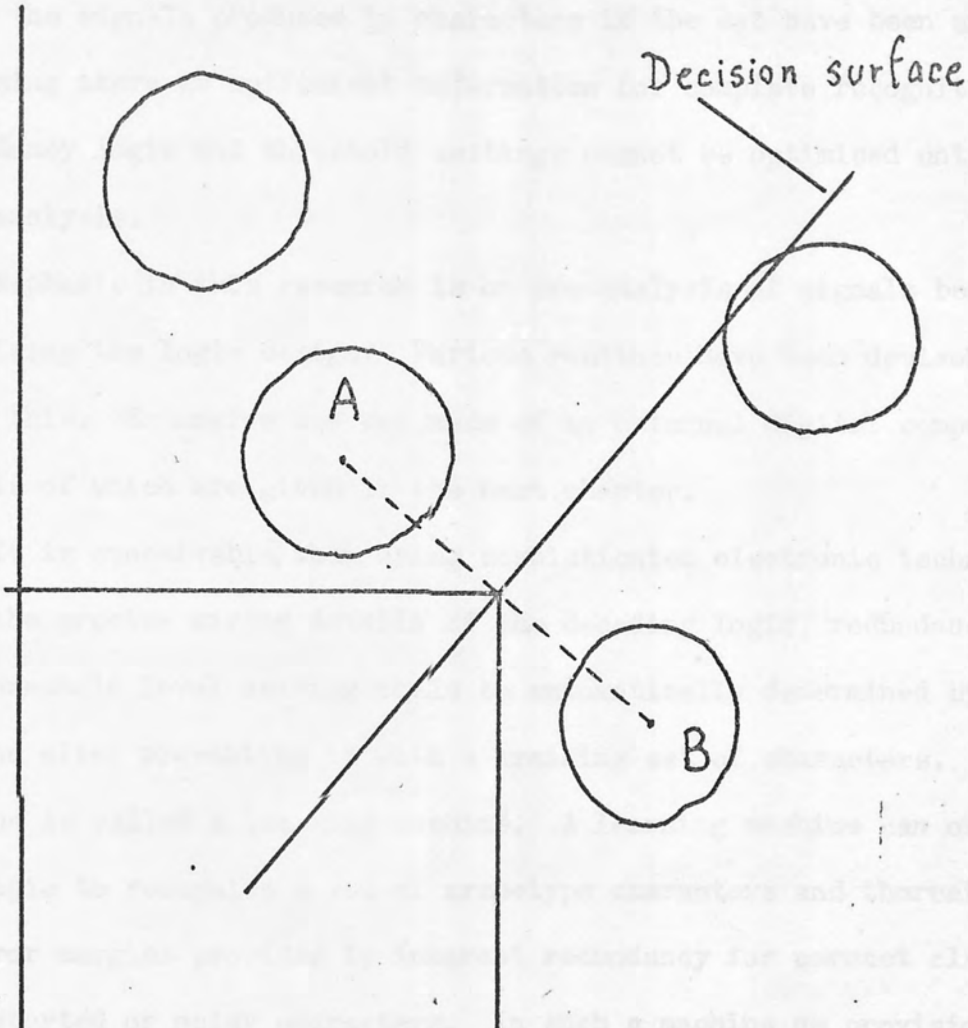

Fig. 4·11 The Principle of a Dichotomy Desicion Surface in Feature Space

4.12 Learning Machines and Adaptive Logic

Precise connecting detail of the decoding logic can only be known after the signals produced by characters in the set have been analysed (assuming there is sufficient information for complete recognition). Redundancy logic and threshold settings cannot be optimised until after this analysis.

Emphasis in this research is on pre-analysis of signals before finalising the logic design. Various routines have been devised for doing this. Extensive use was made of an external digital computer, details of which are given in the next chapter.

It is conceivable, when using sophisticated electronic techniques, that the precise wiring details of the decoding logic, redundancy logic and threshold level setting could be automatically determined by the machine after presenting it with a training set of characters. Such a machine is called a learning machine. A learning machine can orientate its logic to recognise a set of archetype characters and thereafter rely on error margins provided by inherent redundancy for correct classification of distorted or noisy characters. In such a machine no provision is made for recognising characters of different type font and it would be more by luck than judgement if the machine managed to recognise characters of different styles.

To perform the task of recognising characters in many different type fonts, a more flexible learning machine is envisaged. The general solution is an adaptive logic whose mode is quasi-statistical, that is, connections are made on the basis of "experience" and the logic is weighted towards recognising the "most probable" character. Theoretically these are characters situated in the densest part of the character distribution clusters in feature space.

In the one bit system not only can the logic connections be made on a weighted decision basis but so also can the level at which the trigger switches be weighted or biased on the basis of previous experience. A machine with this type of adaptive logic would undergo a training period during which it receives its experience with respect to the types of characters it must recognise.

Even more exotic machines can have built in a self teaching logic feedback loop which correlates input information with output decisions in order to weight the logic. This implies that even after an initial training period, the machine is still capable of amending the logic to cope with new situations.

Adaptive logic systems are described by: Aleksander and Albrow[22]; Batchelor and Wilkins[80]; Uttley [81] ; Lendaris and Stanley[82].

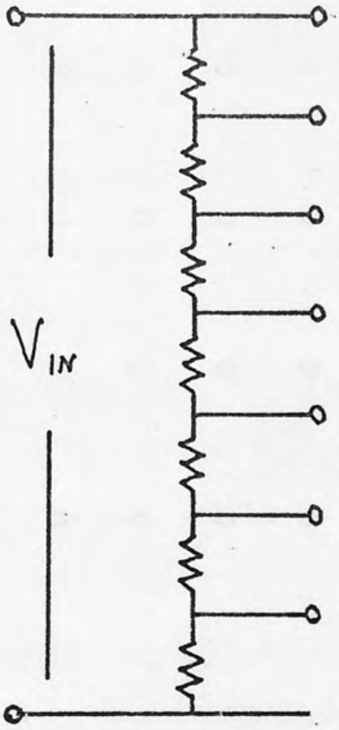

Fig. 4·7

	INPUT							OUTPUT		
Level	A	B	C	D	E	F	G	f_1	f_2	f_3
0	0	0	0	0	0	0	0	0	0	0
1	0	0	0	0	0	0	1	0	0	1
2	0	0	0	0	0	1	1	0	1	0
3	0	0	0	0	1	1	1	0	1	1
4	0	0	0	1	1	1	1	1	0	0
5	0	0	1	1	1	1	1	1	0	1
6	0	1	1	1	1	1	1	1	1	0
7	1	1	1	1	1	1	1	1	1	1

TABLE 4.1 Logic Truth Table for Seven Level to 3-bit Binary Conversion

CHAPTER 5

RESULTS AND THEIR INTERPRETATION

5.1 Introduction

Results included in this chapter consist primarily of data representing Fourier coefficients or Fourier constants of specified character sets. Most of the data are those collected using the optical variable frequency Fourier analyser described in chapter 3. Data were collected by "tuning" the grid into the desired frequency and then presenting each character in the set individually in sequence. The data collected is then a measure of the extent to which that frequency is present in each character.

It was evident from the feasibility study that amplitude information was sufficient to do the bulk of recognition. Phase would be used to distinguish character pairs having a 180° rotational ambiguity, such as 6 and 9 and d and p. The emphasis was therefore placed on the analysis of amplitude data rather than phase data.

Corresponding Fourier coefficients generated using a digital computer were used to:-

(a) Check the values of those generated optically;

(b) Assist in locating good coefficients;

(c) Assist generally in a feasibility survey.

The computer work was conducted by Dr. Leifer and ran parallel with the optical work. Computer generated data is included in the results where relevant.

5.2 Feasibility

A feasibility survey of Fourier coefficients was carried out to assess whether or not Fourier constants of characters, particularly those generated optically, constitute useful features for discrimination between character pairs.

Optically generated Fourier coefficients are subject to real conditions and constraints. Limitations are placed on the degree of accuracy to which they may be determined by spatial and temporal noise inherently present in the optical channel, and by noise in the detectors and electronics. Optically generated Fourier coefficients should therefore be used in a feasibility study rather than computer generated Fourier coefficients which are relatively noise free.

Parallel work supervised by Dr. Leifer assisted in locating the best Fourier frequency sampling points by generating them using a digital computer. Results of this work also indicated that relatively few low frequency Fourier spectrum points would be sufficient to recognise an alpha-numeric set of characters.

Input data for the computer were derived by back projecting characters onto a 10 x 10 array of squares imposed over a transluscent screen. Each large square is subdivided into 25 small squares. The number of small squares within large squares occupied by parts of the character were visually estimated. Each character is therefore presented to the computer encoded into 500 bits. The coefficients are printed out in a rectangular array format based on the 2-D Fourier transform plane. Unit frequencies along the vertical and horizontal axes are based on the 10 x 10 unit frame period.

A practical feasibility scheme was organised to assess the general efficiency of optics and opto-electronics in generating Fourier coefficients. Important factors are: signal to noise ratio, stability and reliability.

5.2.1 Details and Results of Feasibility Study

The rectifier outputs supplying amplitude information in the form of d.c. analogue voltages were fed into a pen recorder via a potentiometer for mapping continuous spectrum charts. This system was found to be impracticable for analysis of results. Instead, with the chart stationary, the indicator scale on the pen recorder was utilised for collecting data.

Tentative data were collected at nine frequency points coinciding with ones generated by computer, for a set of numerals in Gill Sans type face. Gill Sans font was selected because it is plain and bold. Superfluous detail such as serifs are absent. This style was devised for its simplicity and ease of recognition by man.

The frequencies of coefficients selected for this study are illustrated in the frequency plane diagram shown in Fig. 5.1(a) which is built up of 2-D rectangular harmonics, the first harmonic being based on the unit period frame frequency. These are the first best 9 frequencies showing most promise on inspection of the computer generated coefficients.

The pen recorder scale was calibrated before taking results at the Fourier sampling frequency containing the highest Fourier coefficient. This was done by displaying the character giving rise to the highest reading, and adjusting the potentiometer for maximum scale deflection. The signal to noise ratio was estimated at this stage. With the maximum signal adjusted to read 20 m.v. on the pen recorder scale, the electronic noise recorded ranged between 1.5 and 2 m.v. This was done merely by cutting off the illumination to the character. This indicated a dynamic signal to noise ratio of around 10. This might lead to instability in a reading machine but could be coped with by redundancy logic. Noise conditions were by no means optimised and might be improved with better optics and more sensitive photodetectors.

The set of results shown in Table 5.1 is a summary of 3 sets taken to assess stability. The error indicates the extent to which the results fluctuated between the sets. Table 5.2 shows the same set of results translated into an 8 level scheme using the translation criterion:

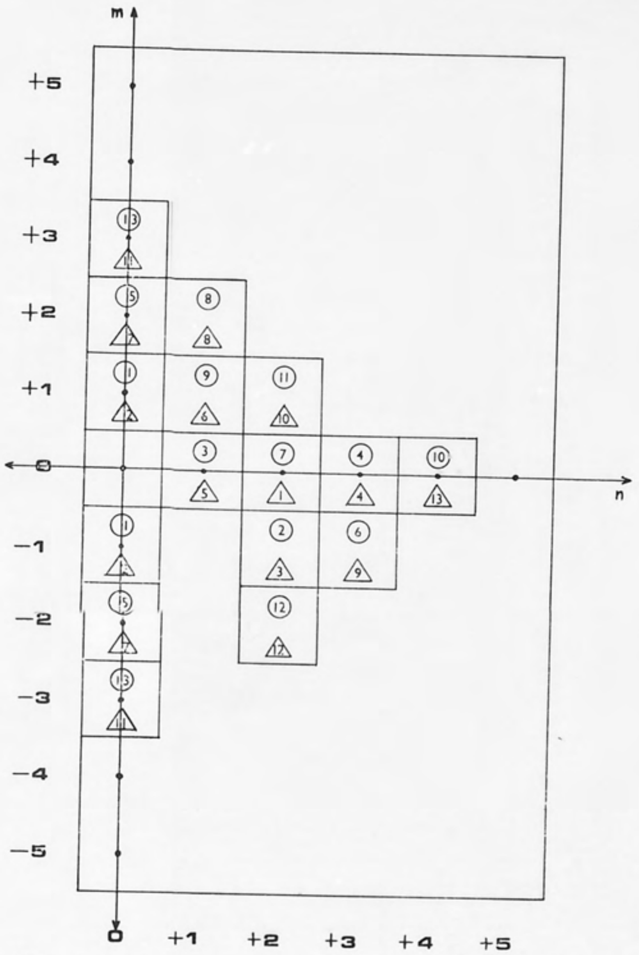

Fig 5·1(a) Plot of Fourier coefficients in order of efficiency as discriminators figures, order normalized △, order unnormalized ○.

LEVEL		SCALE RANGE
0	≡	0 - 4.5 m.v.
1	"	4.5 - 6.5 "
2	"	6.5 - 8.5 "
3	"	8.5 - 11 "
4	"	11 - 13.5 "
5	"	13.5 - 15.5 "
6	"	15.5 - 17.5 "
7	"	17.5 - 20 "

Inspection of table 5.2 reveals that each character pair, except 6 and 9, can be distinguished by one or more features on the basis of the digital levels.

A safe recognition criterion was, however, established so that for the purpose of analysis unstable signals caused by noise or drift could largely be neglected. This was to accept pairs of characters as being distinguishable only if they are separated by at least 3 levels at one or more features. Or, failing that rigid criterion, to accept character pairs separated by 2 levels at 3 or more features.

This provides a wide margin of safety since if two characters are separated by 3 levels at one frequency only, then both characters can drift towards one another, each by one level, and still be separated. The second criterion is equally rigid since it depends upon the principle of triple redundancy. The criteria were used as a basis for recognition. throughout analysis of all 8 level data.

The phase channel output was tapped off before the rectifier and displayed on an oscillascope, whilst the rectified signal was displayed on the pen recorder indicator scale. Phases at the nine computer selected frequencies were examined for 6 and 9 discrimination. One outstanding frequency which exhibited a difference in phase between 6 and 9 of nearly π was point number ② in the frequency diagram shown in Fig. 5.1.

Table 5.3(a) gives the equivalent computer generated coefficients for the same set of numerals. Table 5.3(b) contains these coefficients translated into 8 levels for direct comparison with the optically generated data in Table 5.2. Results tallied reasonably well.

5.3 Frequency Selection

The frequencies of the computer generated coefficients (60 in all) constitute a good sampling cross-section and were the ones examined initially in selecting coefficient frequencies for recognising character sets. The optical Fourier analyser has the distinct advantage of being capable of sampling any point in the 2-D frequency spectrum within physical limits.

In order that a fairly simple sampling procedure may be adopted, optically generated Fourier coefficients were sampled at the same frequencies and angles (in the polar frequency diagram) as the computed ones. If certain character pairs were not separated at these frequencies, a systematic search for suitable frequencies within the continuous spectrum would be necessary.

5.3.1 Efficiency of Frequency Sampling Points as Features

To assist in locating the most useful features in the Fourier transform plane, a measure of their relative efficiencies were estimated. Merit values of sampling frequencies were calculated from the Fourier coefficients which were either computed or generated optically. Initially it was found very convenient to use the punched tape computer output containing Fourier coefficients as input data for a merit computing programme. A merit number for a Fourier frequency was generated by subtracting amplitude values of coefficients at that frequency for every character pair in the set, and finally, summing together every subtraction. As a check on consistency, merit numbers were computed using various character sets which included:-

Gill Sans numerals;

Gill Sans letters (capitals);

O.C.R.B. numerals;

Bank numbers (MICR).

The order of merit of these frequencies calculated on the basis of these type fonts is summarised in the diagrams shown in Figs. 5.1 (a) and (b). Fig. 5.1 (a) gives the order of merit using both normalised and unnormalised coefficients of the Gill Sans numerals.

These diagrams serve to illustrate that the most useful frequency sampling points for recognising characters are grouped together in a low frequency band of the Fourier spectrum.

5.3.2 Procedure for Isolating the Minimum Number of Features Required to Recognise a Character Set

The best 9 or so features (Fourier frequencies) are selected to do a numeric character set (15 or 16 for letters and possibly 20 for an alpha-numeric set). A set of data (normally amplitude values) is collected at these coefficients using the optical method. The data are converted into 8 digital levels before undergoing the first stage of computation for locating redundant features. A computer programme subtracts the digital levels of every character pair at each frequency in turn, and prints up the results tabulated under "character pair" versus "frequency". The merit number for each frequency (derived this time from digital values) is scored at the bottom of each frequency column.

The most obviously redundant frequencies can, at this stage, be located visually on inspection of the print out sheet. These points are eliminated and fresh data are collected at the remaining frequencies. This data can then be computed again in the same way if necessary for closer scrutiny.

This procedure is equally applicable to both computer generated coefficients and data collected on the optical Fourier analyser. The optimum set of features for recognising a character set can thus be selected on the basis of either computer generated coefficients or optically generated coefficients. Both have their merits. It is quicker and more convenient in the initial stages of the search for features, to use the computer results when dealing with masses of data, for example, the alpha-numeric set taken at 20 frequencies in table 5.4. For the most part, optical data were collected and processed together with computer generated results for comparison.

5.3.3 Simplification of Feature Reduction for Large Character Set and Many Frequencies

It becomes very cumbersome to analyse character pairs in a large set taken at a large number of frequency points. The process can be greatly simplified if the set is broken down into two or more subsets. Each subset is treated independently as regards the features required to distinguish all of the character pairs within a subset. When the features for the respective subsets have been located, the subsets are recombined and the original set examined at the combined set of frequencies. The probability that many of the subset cross-pairs will automatically be distinguished is good. Pairs that do remain can be isolated into a further subset. Features to discriminate between remaining pairs will be found in ones other than those already selected.

5.4 Optical Fourier Coefficients of Characters Used for Analysis in Frequency Selection

Results analysis can be broken down into 5 main studies:-

1. Coefficients of Gill Sans alphanumeric characters at 20 frequency sampling points (computed and optical coefficients).

2. Locating the minimum number of frequency points required to recognise Gill Sans numerals (computed and optical coefficients).
3. Investigation into the effect different type faces have on the value of coefficients. The type fonts used were:-

    Gill Sans;

    O.C.R.B;

    Rockwell 371;

    Bank numbers (MICR).
4. Coefficients of OCRB alpha-numeric characters at established efficient frequencies.
5. One bit study. Locating minimum number of frequencies required for OCRB and Gill Sans mixed numerals, using one bit encoding.

5.4.1 Gill Sans Alpha-numeric Characters

Table 5.4 shows computed Fourier coefficients taken at the best 20 frequencies which were used as data in the first stage of feature selection (by elimination). Eleven character pairs were not distinguishable at these points (eight in reality since 1 and I are identical and 6 and 9 are not done by amplitude). On inspection of the "pair" versus "frequency" print out, 4 features were found to be virtually redundant. These are points 2, 9, 19 and 20 taken in the order shown in Table 5.4. Data from the remaining 16 features were recycled and the print out scrutinised. 10 character pairs remained indistinguishable. All number/letter cross pairs were distinct from one another.

This demonstrates the inadequacy of computer generated coefficients in selecting operative frequencies for complete recognition of a character set. The computer plays a part in selecting highly efficient frequencies (that is, ones that do the bulk of the recognition) which can then be followed up with optically generated data.

Gill Sans alpha-numeric set was broken down into 2 subsets, namely numbers and letters for analysis of optical data. A number of repeated sets of optically generated Fourier coefficients were collected at 16 frequencies coinciding with the 16 best computer frequencies selected on the basis of Gill Sans alpha-numeric characters. Table 5.5 contains one such set.

These results, however, were shelved at this stage as it was felt it would be a more profitable proposition to deal with numerals alone. The ten numerals could then be dealt with much quicker and easier. Any techniques developed in selecting frequencies to recognise numerals could then also be applied when handling letters and numerals together.

5.4.2 Gill Sans Numerals

Data were collected at the 8 best computer selected frequencies for Gill Sans numerals using the optical Fourier analyser. The data were digitised before the computer performed pair subtraction. This data is contained in Table 5.6. 3 and 5 were found to be the only doubtful character pair, while 3 frequencies were completely redundant. Fresh data contained in Table 5.7 were collected at the remaining 5 points, and again digitised prior to being computed (pair subtraction). The "pair" versus "frequency" print up revealed that the majority of pairs were distinguished by the 3 frequencies; $(3,0^\circ)$; $(1,90^\circ)$; $(\sqrt{5}, -27^\circ)$, where the first number in brackets designates the frequency and the second number designates angular position within the Fourier transform plane, thus conforming to polar co-ordinate notation. If these frequencies alone were relied upon for recognition, then pairs remaining which are not distinct from one another on the basis of the 3 level recognition criterion are:-

2 and 3)
)
3 and 5) separated by 2 levels at one frequency
)
2 and 7)

4 and 8 separated by 2 levels at two frequencies

Numerous sets of results were collected at these points using slightly different gain settings to see if any improvement was possible. A typical set, which includes one bit phase data at $(\sqrt{5}-27^\circ)$, is contained in Table 5.8.

These 3 frequencies were found to be inadequate for recognising Gill Sans numerals using an equally spaced level scheme. However, it was possible, by redefining the digital switching levels independently in each channel, to successfully recognise the Gill Sans numerals using only 3 frequency sampling points. This was achieved by noting voltages produced by every character at each frequency and marking their position on a 0 - 10 volt chart, shown in Fig. 5.2. This displays the distribution of characters and optimum threshold voltages can be determined on inspection.

The frequencies $(3,0^\circ)$, $(1,90^\circ)$ and $(\sqrt{5}, -27^\circ)$ form the basis of a character recognition machine described in detail in chapter 9.

5.5 Type Face Comparisons

The best frequencies which recognise a single numeric set of characters turn out to be ones that analyse low spatial frequency content in characters. These frequencies lie within the range 1 - 3 of the unit frame frequency. This implies that any source noise in the form of either distorted, broken, smudged characters or flecks of ink having spatial frequencies outside this range, will be rejected.

Variations in type face and style are not strictly mutilations or distortions. Type fonts have evolved over centuries for the fashions of the day. Other factors influencing the design and use of type fonts are print context or sociological ones. Today, type fonts are varied and diverse in design, differences often being subtle and bearly noticeable. The existence of variations in type face style gives rise to an anomalous contradiction of definition. According to definition of characters in chapter 1, each type face belongs to a different alphabet.

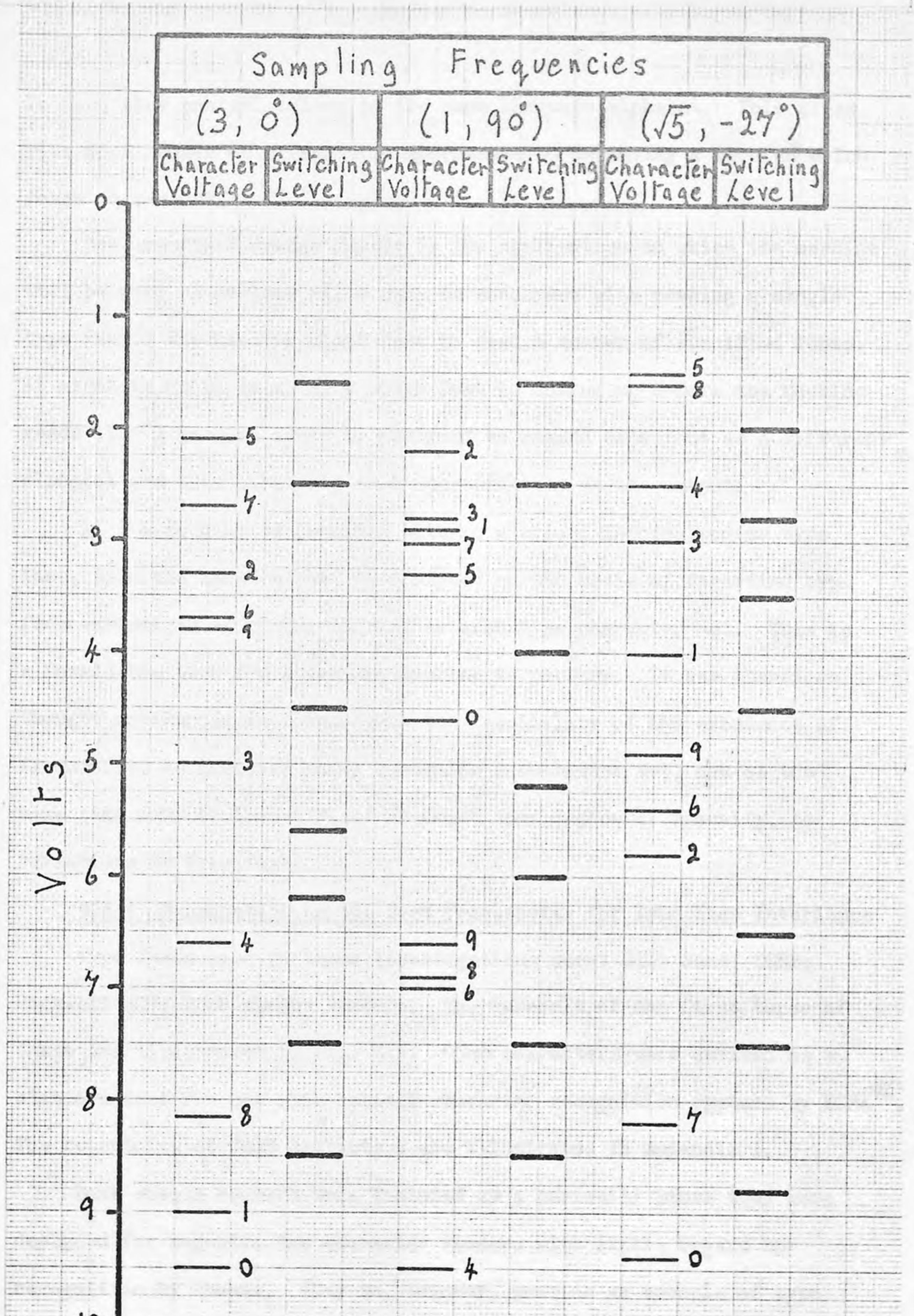

Fig. 5·2 Voltage Distributions of Characters at Three Sampling Frequencies.

In fact they can all belong to the same language alphabet. This gives rise to a number of alternative approaches to designing a machine which reads characters.

One important design factor is the application to which the machine will be put. A machine might only be concerned with reading a single type font. The machine might have to read a number of specified fonts. It might be known in advance which font is coming up before the machine reads it. A machine could be designed to regard each font as a different alphabet and then labelling them appropriately at the output.

If the machine is provided with no a priori information or type face, then the machine must be designed on the basis of regarding type face variations as distortions of an archetype character set. This is a formidable task for a reading machine to perform. It was therefore thought worthwhile to investigate the feasibility of the existence of frequencies as features which recognise a character set, and at the same time exhibit immunity, or at least some degree of immunity, to variations in type face.

5.5.1 Examination of the Best Frequencies for Type Face Invariance

Type fonts used in these investigations were: Gill Sans; OCRB; Rockwell 371; bank cheque numbers. The numerals of the first three of these are illustrated in Fig. 5.3. OCRB characters were devised as a standard font for use with optical character recognition systems by ECMA[94]. The repertoire of OCRB characters are illustrated in Appendix I.

Bank cheque numbers were included as a curiosity since they were designed for magnetic ink character readers with little regard to recognition by humans. They do, however, provide an example of type face, displaying gross deviation from the average type face.

A cursory comparison of the bank cheque numbers was made with Gill Sans numerals at the best 3 frequencies selected for Gill Sans numerals. A set of data was collected at these frequencies, including phase of frequency

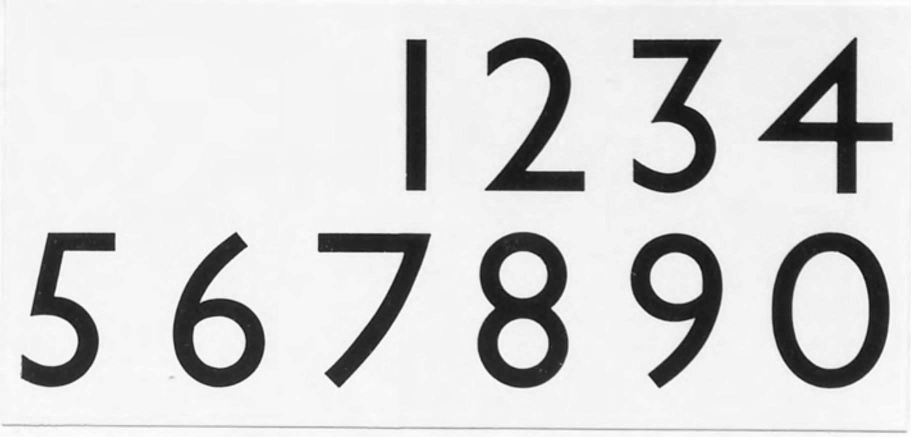

1234
567890

Fig. 5.3 (a) Gill Sans

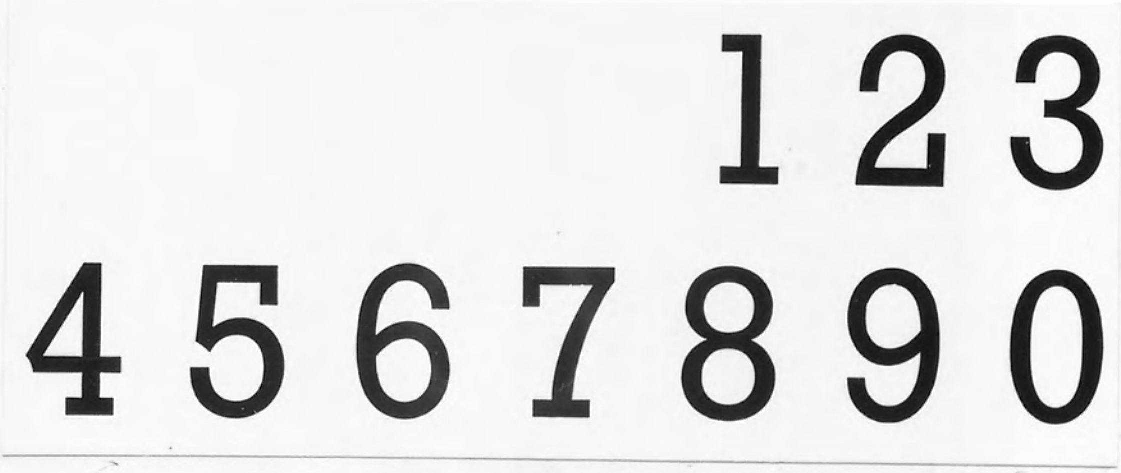

123
4567890

Fig. 5.3 (b) Rockwell 371

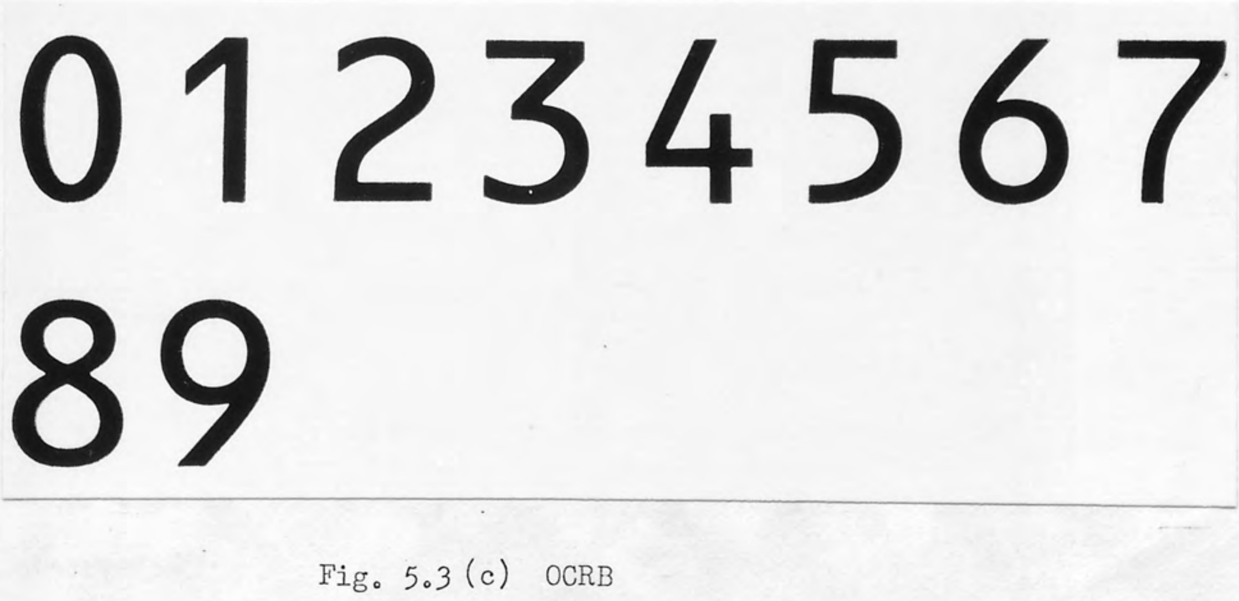

01234567
89

Fig. 5.3 (c) OCRB

($\sqrt{5}$, -27°), for both fonts. Amplitude data were displayed on three, 3-bit digital voltmeters consisting of three blocks of 3 lamps representing binary digits. This is an embodiment of the mark I character recognition machine described in chapter 9. In this instance the 3 channels carried information in parallel. The results obtained are reproduced in Table 5.9.

50% of amplitude data changed by 2 or more levels between the two fonts and gave a crude measure of the degree of type face immunity between this particular pair. Little change in phase data occurred. Proper phase distinction is indicated by 2 or 0 to represent IN or OUT of phase respectively. Intermediate phases resulting in poor discrimination are marked 1. The criterion used was that if a flicker of the phase indicator lamp could be detected, then a 1 was allocated.

5.5.2 Interpreting Type Face Data

Ideally a character should contain the same low spatial frequency content regardless of its style or type face. In practice, however, frequency content of characters is not identical between corresponding characters in different styles. This was demonstrated when comparing Fourier coefficients of Gill Sans numerals with those of bank cheque numbers; a percentage of results change completely. The fraction of coefficients that remain unchanged can be regarded as a measure of the degree of immunity that those frequencies have to that particular pair of type face. Indeed, a scheme for selecting suitable frequency sampling points might be based on a consideration of only those frequencies at which the coefficients do not seriously change in value between corresponding characters in two type fonts. This would be tedious, if not impossible in many instances. It is simpler to accept the fraction of changes that occur between type faces provided that the following two conditions are observed:-

1. All character pairs in both sets are completely distinguishable within each individual type face.

2. All the cross-character pairs between the two type fonts are distinguishable.

Type face investigations proceeded with the following programme:-

1. Optimisation of the type face immunity factor between Gill Sans and OCRB numerals at the 3 best frequencies selected for Gill Sans only.
2. Experiments with three type fonts: Gill Sans, OCRB, Rockwell 371.
3. OCRB and Gill Sans only:-
    - (a) Optimising frequencies for maximum immunity factor.
    - (b) Locating coefficients for complete recognition of both numeric fonts, using a one bit information processing system.

5.6 Optimising Type Face Immunity Factor at 3 Best Points

Results were taken using a composite three frequency grid for this study. This is the grid containing frequencies for the recognition of Gill Sans numerals used in the mark I machine described in chapter 9. Sets of coefficients were recorded in 3-bit form at different displacements of the detectors, relative to the composite grid about the position for which the grid was designed. The effect of such displacement is to slightly alter the values of the frequencies sampled. Coarse displacements were made to start with at positions where sets of data were collected and recorded. The results in Table 5.10 were taken at the frequencies selected originally for which the position of the detectors on the optical bench was 83.8 cm. The immunity factor for this set is 21/30, roughly $\frac{2}{3}$. Tables 5.11 (a), (b), (c), (d), (e), (f), (g) and (h) are amplitude results taken at one centimetre intervals of the detectors along the bench ranging between 80 cm. and 87 cm. The immunity factor is shown on each table.

The 84 cm. position was thus located as the best position. Results given in Tables 5.12 (a), (b), (c), (d), (e) and (f) are for fine displacements about the 84 cm. position in the range between 83.5 cm. and 84.5 cm. taken in steps of 0.2 cm. It was found that the best position was the 84 cm. position but having the gains in the channels set according to the results collected at the 83 cm. position.

The general conclusion drawn from this exercise is that the frequencies selected originally for best discrimination of Gill Sans numerals (used as an archetype font) are also the frequencies which have the best immunity factor between the archetype set and another set, namely OCRB numerals, whose style does not differ greatly from the archetype. The immunity factor could be improved slightly by optimising the gain in each channel.

5.7 Experiments with Three Type Fonts

A third numeric type font, Rockwell 371, was introduced and tried on the best frequencies for Gill Sans. These 3 frequencies were totally inadequate for discrimination between Rockwell numerals.

A search of the Fourier frequency spectrum was made to locate points which would recognise Rockwell numerals. The 3 best points could then be added to include Gill Sans numerals and OCRB numerals in the repertoire.

Difficulty was anticipated in distinguishing certain pairs of Rockwell numbers, when the most efficient frequencies for Gill Sans, proved insufficient. Also closer visual inspection of characters 3, 5, 6, 8 and 9 supports this supposition. A fairly rigorous search was therefore embarked upon, using the optical Fourier spectrum analyser.

Polar sampling of the frequency spectrum was found to be more convenient than the rectangular sampling grid generated by the computer whilst collecting data during this search. Samples were taken for 30° angular intervals of the spectrum analysing grid at the spatial sampling frequencies 2, 3 and 4 times the unit frame frequency. Frequency (4, 70°) was also included because it distinguished an awkward character pair.

A single electronic channel, terminating in the 3-bit lamp display, was used for monitoring amplitude data. The amplifier gain in the channel could be adjusted and was freshly set at each frequency so that the character (out of all three fonts), yielding the highest amplitude coefficient, produced an output of 9.5 volts. Results taken at 19 spectrum points are reproduced in Table 5.13. Five or six good points were picked out by the computer procedure but several character pairs remained indistinguishable. More data, reproduced in Table 5.14, were collected at these points plus several others including (4, -50°), making 9 in all. 4 efficient points were located and with the addition of (4, -15°) were found to be the optimum 5 points required to recognise Rockwell 371 numerals if some pairs, separated by 2 levels, were accepted. Coefficients of Gill Sans, OCRB, and Rockwell 371 numerals were measured at these frequencies, and both internal discrimination within each font and relative immunity factors between each pair of fonts, were examined. Discrimination within Gill Sans numerals was incomplete. Pairs indistinguishable included 2 and 7; 3 and 5; 6 and 8; 8 and 9. This could be remedied by merely including the 3 spectrum points which distinguish Gill Sans numerals. However, at the expense of increasing spatial frequency bandwidth, it was found possible to recognise the 3 individual type faces by substituting (4, -50°) with (5, -45°) and adding (5, 45°) for safety. Data collected for each font at these spectrum points are contained in Tables 5.15 (a), (b) and (c).

5.7.1 Conclusions

Rockwell is not a good type face for recognition using optically generated Fourier coefficients as features. Its self recognition alone necessitates 5 or 6 specially selected spectrum points located generally in a higher frequency region than the points used for Gill Sans and OCRB. The latter being located within the 1-3 frequency range while the former are found between frequencies 3-5. Partly because of the higher spatial frequencies involved in distinguishing Rockwell character pairs, variations in style between Rockwell and other fonts only too obviously showed up in a significant fall off in the immunity factor. The type face immunity factor between the three fonts is roughly 30% which is poor. The lower this factor drops, the less chance there is of achieving character cross pair discrimination between fonts.

It was decided that pursuing Rockwell 371 was more trouble than it was worth and that faster and more useful progress could be made from a study of Gill Sans and OCRB fonts alone.

5.8 Comment on Type Face Variations

This is a more irksome problem than was at first supposed. Variations in type face can alter the entire frequency content in characters to the extent of influencing even the low frequency coefficients which are features for recognition. The conclusions are that a degree of immunity (between 40 and 80%) usually exists between pairs of type face and can usually be optimised by being selective in choosing spectrum points for features. Immunity drops off with the inclusion of extra different type fonts for recognition. One outstanding frequency point for type face invariance is $(1, 90^\circ)$.

5.9 Selecting Frequencies to Recognise Two Type Fonts

This section describes two studies both of which involved selecting the most efficient spectrum points in recognising numerals in type fonts OCRB and Gill Sans. The first study involved optimising type face immunity factor and selecting the best frequencies for a 3-bit per channel system. The second study involved selecting coefficients for a one-bit per channel system. This is an innovation not realised until later in the project.

5.9.1 Optimisation of Type Font Immunity

The 9 most efficient spectrum points selected by the computer for the Gill Sans type face were the ones chosen initially for this study. The frequencies are: (1, 90°); ($\sqrt{5}$, 27°); ($\sqrt{17}$, 14°); (2,0°); ($\sqrt{5}$, -27°); (2, 90°); ($\sqrt{5}$, 63°); (3, 0°); ($\sqrt{2}$, 45°). All are lower than 3 times the unit frame frequency except ($\sqrt{17}$, 14°). Each frequency was investigated separately, as regards optimising the immunity factor. Coefficients of both fonts were collected and tabulated when taken at small frequency increments either side of the original frequency position, using the same technique described in section 5.6. A single "variable" frequency grid was used with one detector plugged into one of the 3-bit channels used in the mark I machine. The detector was shifted either side of the central position in 1 centimetre steps to roughly locate the position of maximum immunity and then in $\frac{1}{2}$ centimetre steps for fine location. The best positions found for seven points are given in a synopsis of these results contained in Table 5.16, together with their immunity factors.

The above seven points were chosen, paying regard to efficiency and frequency (lowest frequencies are chosen where possible). To make this reduction, some compromise was necessary between the best frequency adjusted position for immunity and for discrimination. The points included the best 3 previously selected for Gill Sans. OCRB coefficients collected at these points were put through the computer pair subtraction routine resulting in redundant points being eliminated. Four good points remained (including the best 3 for Gill Sans) which completely distinguished all pairs of OCRB numerals on a 3-bit criterion. These frequencies are: (1, 90°); ($\sqrt{5}$, -27°); ($\sqrt{5}$, 63°); (3, 0°). Their frequencies were adjusted slightly on optimisation so they are not precisely these values.

These four frequencies were then examined for one-bit capability.

5.9.2 One Bit System for OCRB and Gill Sans

If a fair degree of discrimination were possible using a one-bit encoding system, then it would be favoured for two important reasons. These being broadly:-

1. Larger error margins are provided.
2. Logic is simplified and reduced.

This system involves optimising the thresholding voltage in each channel for maximum character pair discrimination. A technique for doing this is as follows: A set of analogue amplitude voltages are collected and recorded for each type face at the selected frequencies. This is done by inserting a voltmeter after the rectifier but before the threshold elements in the circuit of one of the already available electronic channels. Voltages obtained at each frequency are listed in their order of magnitude. The threshold level is determined after careful examination of the location of character pairs. An error margin criterion specifying a minimum voltage separation between every character pair at one or more frequency points must be introduced. An error margin of 1½ volts was decided upon. That is, each character of a pair that is to be separated must be at least three quarters of a volt either side of the switching level. This is based on coefficients producing voltages within the range of approximately 0 - 10 volts.

Analogue voltages for OCRB and Gill Sans numerals taken at the above four Fourier spectrum frequencies are reproduced and arranged in numerical order in Table 5.17. The optimum switching or thresholding voltage at each frequency is indicated. The exact final positioning of the switching voltage is often dictated by a few critical character pairs which rely on a single frequency for their discrimination.

Sometimes, the voltages produced by these pairs, although separated by the requisite 1½ volts individually, overlap in such a way as to render a single switching level insufficient. This is remedied by either incorporating additional frequencies, or else inserting more than one trigger in a channel.

More frequency points were found to be necessary after analysis of Table 5.17. Four more were inspected (ones previously rejected for the 3 bit) and more coefficients in the form of d.c. voltages were measured and recorded. Two additional frequencies were found to complete the analysis. Voltages given in numerical order obtained at these points are reproduced in Table 5.18. Optimum switching voltages are also indicated. Finally, coefficients in binary form for both type fonts are reproduced in Table 5.19.

The frequencies necessary to recognise OCRB numerals only, using a one bit system, are simply: $(1,90^{\circ})$; $(2,90^{\circ})$; $(3,90^{\circ})$ and $(\sqrt{5},-27^{\circ})$. These are used in the Mark II machine described in chapter 9.

Other miscellaneous sets of Fourier coefficients included for entirety are reproduced in Appendix II.

	1	2	3	4	5	6	7	8	9
Sampling Frequencies:	$(1,90^\circ)$	$(\sqrt{5},-27^\circ)$	$(1,0^\circ)$	$(3,0^\circ)$	$(2,90^\circ)$	$(\sqrt{10},-18^\circ)$	$(2,0^\circ)$	$(\sqrt{5},63^\circ)$	$(\sqrt{2},45^\circ)$
Character									
1	6.1 ±0.1	9.1 ±1.0	14.0 ±0.5	16.3 ±2.0	4.1 ±0.2	10.5 ±1.1	16.2 ±1.3	4.0 ±0.2	7.4 ±0.4
2	5.6 ±0.1	11.4 ±1.0	17.2 ±0.3	7.4 ±0.6	10.2 ±0.8	11.4 ±1.6	13.0 ±1.2	10.5 ±0.8	5.5 ±0.3
3	6.7 ±0.1	7.3 ±1.1	18.3 ±0.3	10.3 ±1.2	8.0 ±0.5	4.6 ±0.4	15.0 ±1.5	4.2 ±0.3	8.4 ±0.4
4	15.3 ±0.4	5.1 ±0.6	18.0 ±0.0	12.0 ±1.5	8.5 ±1.5	6.7 ±0.3	12.1 ±1.2	6.8 ±0.5	13.6 ±0.6
5	7.4 ±0.1	3.8 ±0.4	17.6 ±0.2	6.4 ±0.6	6.6 ±0.4	7.5 ±0.5	13.8 ±1.2	3.5 ±0.0	8.9 ±0.4
6	12.1 ±0.2	8.7 ±1.3	18.5 ±0.1	8.4 ±0.6	4.6 ±0.6	14.0 ±1.5	10.5 ±0.9	3.2 ±0.2	12.0 ±0.6
7	5.9 ±0.1	14.0 ±1.4	14.3 ±0.3	4.5 ±0.5	8.9 ±0.3	10.5 ±1.5	8.0 ±0.7	7.2 ±0.6	5.2 ±0.2
8	12.0 ±0.0	3.8 ±0.3	20.0 ±0.0	13.5 ±1.5	5.5 ±0.5	10.9 ±1.1	9.0 ±1.0	4.2 ±0.2	11.4 ±0.6
9	11.3 ±0.2	9.7 ±0.7	18.0 ±0.2	6.8 ±0.7	3.8 ±0.4	13.0 ±1.6	11.0 ±1.0	3.5 ±0.2	11.8 ±0.8
0	8.7 ±0.1	14.2 ±2.0	14.0 ±0.2	15.5 ±2.0	10.0 ±0.8	11.5 ±1.5	12.0 ±1.4	9.8 ±0.8	4.6 ±0.4

TABLE 5.1 Fourier Coefficients of Gill Sans Numerals taken at 9 Frequencies

	1	2	3	4	5	6	7	8	9
Sampling Frequencies:	$(1,90^\circ)$	$(\sqrt{5},-27^\circ)$	$(1,0^\circ)$	$(3,0^\circ)$	$(2,90^\circ)$	$(\sqrt{10},-18^\circ)$	$(2,0^\circ)$	$(\sqrt{5},63^\circ)$	$(\sqrt{2},45^\circ)$
Character									
1	1	1	4	2	1	1	3	1	1
2	1	3	7	1	4	3	3	4	0
3	1	1	7	2	3	1	4	1	2
4	6	1	7	3	1	1	3	1	4
5	1	0	7	1	2	1	4	1	1
6	5	3	7	2	1	4	2	0	3
7	2	5	6	1	4	2	1	2	2
8	4	1	7	5	2	3	1	1	2
9	5	3	7	2	1	4	2	0	3
0	3	5	6	3	4	2	4	3	1

TABLE 5.2 Digitised Fourier Coefficients of Gill Sans Numerals taken at 9 Frequencies

	1	2	3	4	5	6	7	8	9
Sampling Frequencies:	$(1, 90^\circ)$	$(\sqrt{5}, -27^\circ)$	$(1, 0^\circ)$	$(3, 0^\circ)$	$(2, 90^\circ)$	$(\sqrt{10}, -18^\circ)$	$(2, 0^\circ)$	$(\sqrt{5}, 63^\circ)$	$(\sqrt{2}, 45^\circ)$
Character									
1	47.45	38.38	136.9	84.64	27.42	27.89	116.5	26.07	45.12
2	25.54	92.29	262.4	29.95	125.6	90.71	101.7	126.6	16.96
3	31.06	36.36	283.3	56.30	93.76	27.43	132.3	32.74	62.51
4	200.8	38.87	251.1	90.14	39.81	34.23	100.4	34.74	124.32
5	45.11	11.51	253.8	23.75	57.35	46.85	124.6	36.7	46.98
6	150.4	93.18	269.1	72.90	37.84	133.6	74.91	6.219	117.2
7	83.01	151.3	208.03	49.03	131.0	86.42	29.83	78.45	76.26
8	135.1	29.15	328.8	166.1	75.32	93.31	36.43	42.50	79.98
9	149.8	91.98	266.8	71.87	40.97	130.9	70.65	8.718	112.6
0	95.11	161.4	204.9	112.6	124.8	52.56	142.9	104.3	28.31

TABLE 5.3(a) Computer Generated Fourier Coefficients of Gill Sans Numerals taken at 9 Frequencies

	1	2	3	4	5	6	7	8	9
Sampling Frequencies:	$(1,90^\circ)$	$(\sqrt{5},-27^\circ)$	$(1,0^\circ)$	$(3,0^\circ)$	$(2,90^\circ)$	$(\sqrt{10},-18^\circ)$	$(2,0^\circ)$	$(\sqrt{5},63^\circ)$	$(\sqrt{2},45^\circ)$
Character									
1	1	3	5	6	1	3	6	0	2
2	1	4	7	2	4	4	5	4	2
3	2	2	7	3	3	1	6	1	3
4	5	2	7	3	3	1	4	1	4
5	2	0	7	2	2	2	5	0	3
6	4	3	7	2	1	5	4	0	4
7	2	5	5	1	3	4	3	3	2
8	4	0	7	4	2	3	3	1	4
9	4	3	7	2	1	5	4	0	4
0	3	5	5	6	4	4	4	4	0

TABLE 5.3(b) Digitised Computer Generated Fourier Coefficients of Gill Sans Numerals taken at 9 Frequencies

	Sampling Frequencies																			
	1	2	3	4	5	6	7	8	9	10	11	12	13	14	15	16	17	18	19	20
Character	$(3,90^\circ)$	$(\sqrt{10},72^\circ)$	$(2,90^\circ)$	$(\sqrt{5},63^\circ)$	$(\sqrt{8},45^\circ)$	$(1,90^\circ)$	$(\sqrt{2},45^\circ)$	$(\sqrt{5},27^\circ)$	$(\sqrt{10},18^\circ)$	$(1,0^\circ)$	$(2,0^\circ)$	$(3,0^\circ)$	$(4,0^\circ)$	$(5,0^\circ)$	$(\sqrt{2},-45^\circ)$	$(\sqrt{5},-27^\circ)$	$(\sqrt{10},-18^\circ)$	$(\sqrt{5},-63^\circ)$	$(\sqrt{8},-45^\circ)$	$(\sqrt{10},-72^\circ)$
1	0	0	1	1	1	1	1	1	1	4	3	2	1	0	1	1	1	1	1	0
2	3	2	4	4	2	1	0	1	1	7	3	1	1	0	2	3	3	1	2	2
3	4	3	3	1	1	1	2	2	2	7	4	2	1	0	1	1	1	2	2	3
4	2	1	1	1	1	6	4	1	1	7	3	3	2	1	4	1	1	2	3	0
5	3	3	2	1	2	1	1	2	2	7	4	1	0	0	1	0	1	3	3	2
6	2	2	1	0	1	5	3	0	2	7	2	2	2	0	2	3	4	2	3	2
7	3	2	4	2	0	2	2	1	1	6	1	1	1	0	3	5	2	3	3	1
8	2	3	2	1	1	4	2	1	3	7	1	5	5	0	2	1	3	1	1	3
9	2	2	1	0	1	5	3	0	2	7	2	2	2	0	2	3	4	2	3	1
0	2	2	4	3	1	3	1	5	1	6	4	3	2	0	1	5	2	3	1	2
A	1	2	2	1	0	5	4	4	2	7	0	1	1	0	4	4	2	0	1	2
B	2	3	2	1	1	4	3	2	3	7	1	5	2	0	1	1	1	1	1	3
C	3	3	5	3	2	0	3	2	2	5	3	2	2	1	3	2	2	3	1	3
D	2	2	4	2	1	2	2	4	1	4	7	2	5	1	2	4	0	3	1	2
E	4	3	1	1	1	2	2	2	2	7	4	5	5	4	2	2	2	1	1	3
F	3	2	1	0	1	3	1	1	2	7	4	5	5	4	3	2	2	2	2	2
G	4	4	4	1	3	2	1	4	2	5	5	1	3	0	3	3	1	3	0	3
H	3	1	0	2	3	6	2	2	0	2	7	0	7	0	2	2	0	2	3	1
I	0	0	1	1	1	1	1	1	1	4	3	2	1	0	1	1	1	1	1	0
J	1	1	2	1	0	1	0	0	1	5	4	3	2	2	2	2	2	2	2	1
K	1	0	2	2	3	4	4	2	1	6	1	3	2	3	3	2	1	2	2	0
L	2	1	2	2	1	2	3	2	1	6	4	4	3	3	0	2	1	1	0	1
M	0	1	3	2	3	7	2	1	2	1	7	3	3	0	2	1	2	2	3	1
N	0	1	2	2	5	6	4	1	1	2	7	2	5	1	1	3	0	0	2	0
O	2	3	4	3	2	2	4	3	3	2	5	2	0	0	3	3	3	3	2	3
P	2	2	1	1	1	4	2	1	2	7	2	5	5	3	4	1	2	1	2	2
Q	2	2	6	5	2	4	2	3	3	4	5	4	1	2	4	3	3	4	1	1
R	2	2	2	1	2	5	4	2	3	7	2	5	3	2	3	1	1	0	2	2
S	2	3	2	0	3	1	2	2	0	7	2	2	3	0	0	2	2	3	2	2
T	3	1	3	2	1	3	1	2	1	5	2	2	2	0	1	2	1	2	1	1
U	1	1	3	2	2	3	2	4	1	2	7	1	7	0	2	4	1	2	2	1
V	0	0	2	0	1	4	3	5	3	6	0	1	0	0	3	5	3	0	1	0
W	1	1	2	0	2	7	2	6	5	3	3	1	1	0	2	6	5	0	2	0
X	0	1	3	0	5	3	4	3	0	6	2	1	1	0	4	3	0	0	5	1
Y	0	0	2	1	2	3	2	3	2	5	2	0	0	0	2	3	2	1	2	0
Z	−4	3	4	3	0	0	1	0	0	7	0	1	0	0	3	4	2	0	4	2

TABLE 5.4 Computer Generated Coefficients of Gill Sans Alphanumeric Characters at 20 Frequencies

	Sampling Frequencies															
	1	2	3	4	5	6	7	8	9	10	11	12	13	14	15	16
Character	$(1,90^\circ)$	$(\sqrt{5},-27^\circ)$	$(1,0^\circ)$	$(3,0^\circ)$	$(2,90^\circ)$	$(\sqrt{10},-18^\circ)$	$(2,0^\circ)$	$(\sqrt{5},63^\circ)$	$(\sqrt{2},45^\circ)$	$(4,0^\circ)$	$(\sqrt{5},27^\circ)$	$(\sqrt{8},-45^\circ)$	$(3,90^\circ)$	$(\sqrt{13},56^\circ)$	$(\sqrt{17},14^\circ)$	$(\sqrt{10},-72^\circ)$
A	4	5	5	0	0	4	0	0	4	0	5	0	2	2	3	2
B	4	0	6	6	2	1	0	0	4	5	1	1	4	4	4	4
C	0	3	3	2	5	2	3	4	2	2	3	1	3	2	1	4
D	2	5	2	2	5	0	6	4	1	5	5	1	2	3	4	3
E	2	1	5	4	0	1	4	0	2	5	1	0	6	3	3	6
F	3	2	4	4	0	1	4	0	1	5	0	1	4	2	2	4
G	1	4	3	2	4	1	4	1	0	3	4	1	4	4	2	4
H	4	3	2	3	1	0	7	2	2	7	3	3	3	0	4	3
I	1	2	4	6	0	2	5	0	2	6	2	0	0	0	2	0
J	1	3	4	6	1	3	6	1	1	5	1	1	0	0	3	0
K	3	3	5	4	2	0	1	1	4	4	3	4	0	1	1	0
L	0	2	4	5	2	2	4	2	3	5	3	0	1	0	2	1
M	5	2	2	3	3	3	7	3	2	6	3	5	0	3	3	0
N	4	4	2	1	1	0	7	3	4	7	0	1	0	2	3	0
O	2	4	1	2	5	3	5	4	2	2	4	0	2	4	1	3
P	4	2	5	5	0	2	2	1	2	6	1	3	3	3	2	3
Q	3	4	3	3	6	3	5	5	0	2	4	1	0	3	1	1
R	4	1	5	6	1	1	0	0	4	6	2	2	2	4	4	2
S	1	1	5	1	2	2	3	0	3	3	3	3	3	5	0	2
T	2	2	4	5	4	2	4	2	1	5	3	0	4	0	2	2
U	2	5	1	2	3	1	7	1	1	7	5	1	0	1	5	1
V	3	5	4	3	0	5	0	0	3	1	5	2	0	0	3	0
W	6	5	3	2	0	7	3	0	2	1	5	2	1	0	2	0
X	3	4	5	2	2	0	0	1	4	0	3	6	0	0	1	1
Y	3	4	4	1	2	4	3	1	3	2	4	2	0	2	3	0
Z	0	5	5	0	5	4	1	4	0	0	0	5	5	0	0	3

TABLE 5.5 Fourier Coefficients of Gill Sans Capital Letters taken at 16 Frequencies

	1	2	3	4	5	6	7	8
Sampling Frequencies:	$(1,0^\circ)$	$(2,0^\circ)$	$(3,0^\circ)$	$(4,0^\circ)$	$(1,90^\circ)$	$(\sqrt{5},63^\circ)$	$(\sqrt{5},-27^\circ)$	$(\sqrt{10},-18^\circ)$
Character								
1	4	6	6	5	1	0	2	2
2	7	4	1	1	0	4	3	4
3	7	6	2	2	1	0	2	1
4	7	3	3	3	6	1	1	0
5	7	5	1	1	1	0	1	1
6	7	3	2	3	4	0	3	5
7	5	2	0	0	1	2	5	3
8	7	2	4	7	4	0	0	3
9	7	3	1	3	4	0	2	5
0	5	4	6	0	2	3	5	3

TABLE 5.6 Fourier Coefficients of Gill Sans Numerals taken at 8 Frequency Points

Sampling Frequencies: Character	$(2,0^\circ)$	$(3,0^\circ)$	$(1,90^\circ)$	$(\sqrt{5},-27^\circ)$	$(\sqrt{10},-18^\circ)$
1	6	6	1	2	2
2	4	1	0	3	4
3	5	2	1	1	0
4	3	3	7	1	0
5	5	0	1	0	1
6	3	1	4	3	5
7	1	0	1	5	3
8	1	5	5	0	3
9	2	1	4	2	5
0	4	5	2	5	3

TABLE 5.7 Coefficients of Gill Sans Numerals taken at 5 Frequencies

Character	$(3,0^\circ)$	$(1,90^\circ)$	$(\sqrt{5},-27^\circ)$	Phase
1	7	1	2	1
2	1	1	4	1
3	3	1	1	1
4	4	7	1	0
5	1	2	0	0
6	2	5	3	0
7	0	1	7	1
8	5	5	0	0
9	1	5	3	1
0	7	3	6	1

TABLE 5.8 Typical Set of Gill Sans Coefficients taken at the Three Best Frequencies

Sampling Frequencies:	$(3,0^{\circ})$	$(1,90^{\circ})$	$(\sqrt{5},-27^{\circ})$	Phase
Character		GILL SANS		
1	6	2	2	2
2	1	1	5	2
3	3	2	2	2
4	4	7	2	1
5	0	2	0	1
6	2	6	5	0
7	1	2	7	2
8	5	6	0	0
9	2	5	4	2
0	6	3	7	1
		BANK NUMBERS		
1	3	6	1	2
2	0	2	4	2
3	4	4	1	2
4	7	7	7	0
5	4	2	4	1
6	5	4	5	0
7	0	3	5	2
8	7	7	6	0
9	7	5	7	1
0	4	2	7	1

TABLE 5.9 Comparison of Gill Sans with Bank Numbers. Coefficients taken at 3 Frequencies including Phase Data from $(\sqrt{5},-27^{\circ})$.

Sampling Frequencies:	$(3,0^{\circ})$	$(1,90^{\circ})$	$(\sqrt{5},-27^{\circ})$	Phase
Character		GILL SANS		
1	5	1	1	2
2	1	0	4	2
3	2	0	0	2
4	4	7	2	0
5	0	1	1	0
6	3	5	5	0
7	1	2	6	2
8	6	5	1	0
9	3	6	5	2
0	4	3	6	2
		OCRB		
1	5	2	0	2
2	4	0	4	2
3	2	0	1	0
4	2	6	6	0
5	4	2	5	2
6	4	6	7	0
7	1	2	7	2
8	7	3	2	0
9	4	6	7	2
0	7	3	6	2

Immunity Factor : 21/30

Detector's Position: 83.8 cm.

TABLE 5.10 Comparison of Gill Sans Coefficients with OCRB Coefficients taken at 3 Frequencies including $(\sqrt{5},-27^{\circ})$ Phase Data.

Sampling Frequencies

Character	$(3,0^\circ)$	$(1,90^\circ)$	$(\sqrt{5},-27^\circ)$	$(3,0^\circ)$	$(1,90^\circ)$	$(\sqrt{5},-27^\circ)$
			GILL SANS			
1	6	3	4	6	3	3
2	2	4	4	2	3	4
3	3	5	4	3	4	2
4	3	7	3	3	7	1
5	2	5	3	1	4	1
6	0	7	3	0	7	2
7	0	5	6	1	4	7
8	1	7	2	3	7	0
9	0	7	2	1	7	3
0	7	7	4	7	7	6
			OCRB			
1	7	5	2	6	4	1
2	1	5	6	2	3	5
3	3	6	2	3	4	1
4	0	7	2	0	7	3
5	1	6	1	2	5	3
6	2	7	4	4	7	6
7	1	5	7	0	4	7
8	6	7	2	7	7	1
9	3	7	4	4	7	7
0	7	7	1	7	7	4

Immunity Factor : 19/30 Immunity Factor : 20/30
Detector's Position: 80 cm. Detector's Position: 81 cm.
TABLE 5.11(a) TABLE 5.11(b)

TABLES 5.11 (a) .... (h) Fourier Coefficients of Gill Sans and OCRB numerals taken at 3 Frequencies using the Composite Grid. These tables contain sets taken at positions of the Detectors displaced by 1 cm. shifts about their proper position.

Sampling Frequencies

Character	$(3,0^\circ)$	$(1,90^\circ)$	$(\sqrt{5},-27^\circ)$	$(3,0^\circ)$	$(1,90^\circ)$	$(\sqrt{5},-27^\circ)$
			GILL SANS			
1	6	2	3	6	2	2
2	1	1	4	1	0	4
3	2	2	2	2	1	1
4	3	7	1	3	7	2
5	0	3	0	0	1	2
6	1	6	3	2	6	5
7	1	3	7	1	2	7
8	5	7	0	6	5	1
9	2	7	3	2	6	4
0	7	5	7	5	3	7
			OCRB			
1	6	3	0	6	2	0
2	3	1	5	4	0	5
3	2	2	0	2	1	1
4	1	7	4	1	6	6
5	3	3	4	4	2	5
6	4	7	7	4	6	7
7	1	3	7	1	3	7
8	7	6	2	7	4	3
9	4	7	7	4	6	7
0	7	5	6	7	4	6

Immunity Factor : 17/30
Detector's Position: 82 cm.

TABLE 5.11(c)

Immunity Factor : 18/30
Detector's Position: 83 cm.

TABLE 5.11(d)

	Sampling Frequencies					
	$(3,0^\circ)$	$(1,90^\circ)$	$(\sqrt{5},-27^\circ)$	$(3,0^\circ)$	$(1,90^\circ)$	$(\sqrt{5},-27^\circ)$
Character	GILL SANS					
1	5	1	1	5	0	0
2	1	0	4	1	1	5
3	2	0	0	2	0	0
4	3	7	3	4	7	3
5	0	0	1	0	0	2
6	3	5	6	3	4	7
7	1	2	7	1	1	7
8	7	4	2	6	3	2
9	3	5	6	3	4	6
0	3	2	7	0	0	6
	OCRB					
1	5	2	1	5	1	1
2	4	0	5	3	2	5
3	2	0	2	2	1	3
4	2	6	7	2	6	7
5	4	1	6	4	1	4
6	3	5	7	2	4	7
7	2	2	7	2	2	7
8	7	3	2	6	1	2
9	3	5	7	2	3	7
0	7	2	7	7	1	7

Immunity Factor :24/30	Immunity Factor :22/30
Detector's Position: 84 cm.	Detector's Position: 85 cm.
TABLE 5.11(e)	TABLE 5.11(f)

	Sampling Frequencies					
Character	(3,0°)	(1,90°)	($\sqrt{5}$,-27°)	(3,0°)	(1,90°)	($\sqrt{5}$,-27°)
			GILL SANS			
1	5	0	0	5	0	0
2	1	3	5	1	4	6
3	2	1	1	1	2	2
4	2	7	2	3	7	3
5	0	0	3	1	1	3
6	2	3	6	2	2	7
7	0	2	6	0	3	7
8	6	1	1	5	0	1
9	3	3	7	2	3	6
0	1	0	4	2	1	2
			OCRB			
1	5	1	1	5	2	1
2	2	3	5	1	4	5
3	1	3	4	1	4	5
4	2	5	7	1	4	7
5	4	1	4	2	2	2
6	1	2	7	0	1	7
7	2	3	7	2	3	7
8	4	0	1	2	1	0
9	1	2	7	0	1	7
0	5	0	6	3	1	4

Immunity Factor : 20/30
Detector's Position: 86 cm.

TABLE 5.11(g)

Immunity Factor : 18/30
Detector's Position: 87 cm.

TABLE 5.11(h)

	Sampling Frequencies					
	$(3,0^\circ)$	$(1,90^\circ)$	$(\sqrt{5},-27^\circ)$	$(3,0^\circ)$	$(1,90^\circ)$	$(\sqrt{5},-27^\circ)$
Character			GILL SANS			
1	6	1	1	7	1	1
2	1	0	5	1	0	5
3	2	0	1	2	0	0
4	4	7	3	4	7	2
5	0	1	1	0	0	1
6	3	6	6	3	6	6
7	1	2	7	1	2	7
8	7	5	1	7	5	1
9	3	6	6	4	6	6
0	5	3	7	4	3	7
			OCRB			
1	7	3	0	6	1	0
2	5	1	5	4	0	5
3	3	1	2	3	0	1
4	2	7	7	2	6	7
5	5	2	6	5	1	6
6	4	6	7	4	6	7
7	1	3	7	2	2	7
8	7	4	3	7	3	2
9	4	6	7	4	6	7
0	7	4	7	7	3	7

TABLE 5.12(a)	TABLE 5.12(b)
Immunity Factor : 22/30	Immunity Factor : 23/30
Detector's Position: 83.5cm.	Detector's Position: 83.7cm.

TABLES 5.12 (a) .... (f) Fourier Coefficients of Gill Sans and OCRB numerals taken at 3 Frequencies whose values are offset slightly by displacing the Detectors in 0.2 cm. shifts about their proper position.

Sampling Frequencies

Character	$(3,0^\circ)$	$(1,90^\circ)$	$(\sqrt{5},-27^\circ)$	$(3,0^\circ)$	$(1,90^\circ)$	$(\sqrt{5},-27^\circ)$
			GILL SANS			
1	6	1	1	6	1	1
2	1	0	5	1	0	5
3	2	0	0	2	0	0
4	4	7	2	4	7	3
5	0	0	1	0	0	1
6	3	5	6	3	5	6
7	1	2	7	1	2	7
8	7	4	1	7	4	1
9	4	5	6	3	5	6
0	3	2	7	3	2	7
			OCRB			
1	6	2	1	6	2	1
2	4	0	5	4	1	5
3	2	0	2	2	0	2
4	2	6	7	2	6	7
5	5	1	6	5	1	6
6	4	5	7	3	5	7
7	2	2	7	2	2	7
8	7	3	2	7	3	2
9	4	5	7	4	5	7
0	7	2	7	7	2	7

Immunity Factor : 23/30
Detector's Position: 83.9 cm.

TABLE 5.12(c)

Immunity Factor : 23/30
Detector's Position: 84.1 cm.

TABLE 5.12(d)

	Sampling Frequencies					
Character	$(3,0^\circ)$	$(1,90^\circ)$	$(\sqrt{5},-27^\circ)$	$(3,0^\circ)$	$(1,90^\circ)$	$(\sqrt{5},-27^\circ)$
			GILL SANS			
1	6	1	1	6	1	1
2	1	1	5	1	1	5
3	2	0	0	2	0	0
4	4	7	3	4	7	3
5	0	0	1	0	0	2
6	3	5	6	3	5	6
7	1	2	7	1	2	7
8	7	4	2	7	3	2
9	3	5	6	4	5	6
0	2	1	7	2	1	6
			OCRB			
1	6	2	1	6	2	1
2	4	1	5	4	1	5
3	2	0	2	2	1	2
4	2	6	7	2	6	7
5	5	1	5	5	1	5
6	3	5	7	3	5	7
7	2	2	7	2	2	7
8	7	2	2	7	2	2
9	3	4	7	3	4	7
0	7	2	7	7	1	7

Immunity Factor : 22/30

Detector's Position: 84.3 cm.

TABLE 5.12(e)

Immunity Factor : 23/30

Detector's Position: 84.5 cm.

TABLE 5.12(f)

		1	2	3	4	5	6	7	8	9	10	11	12	13	14	15	16	17	18	19
Sampling Frequencies:		$(2,-60^\circ)$	$(2,-30^\circ)$	$(2,0^\circ)$	$(2,30^\circ)$	$(2,60^\circ)$	$(2,90^\circ)$	$(3,90^\circ)$	$(3,60^\circ)$	$(3,30^\circ)$	$(3,0^\circ)$	$(3,-30^\circ)$	$(3,-60^\circ)$	$(4,-60^\circ)$	$(4,-30^\circ)$	$(4,0^\circ)$	$(4,30^\circ)$	$(4,60^\circ)$	$(4,70^\circ)$	$(4,90^\circ)$
Character																				
1		2	4	4	4	3	2	0	0	6	7	5	0	2	2	7	6	2	3	5
2		5	6	6	6	5	4	1	0	6	7	6	1	4	3	5	2	4	6	7
3		5	6	6	6	5	4	0	1	6	7	6	1	3	2	5	5	3	5	7
4		6	7	6	7	7	6	3	5	7	7	7	4	1	4	7	7	2	2	1
5		6	6	6	6	6	5	0	2	6	7	6	1	4	1	4	3	1	2	5
6		6	7	6	7	7	6	1	3	7	7	6	3	3	2	3	2	0	1	3
7		4	5	5	5	3	2	3	1	5	7	6	0	4	5	7	2	5	7	7
8		7	7	7	7	7	6	0	3	7	7	7	3	1	2	3	3	0	2	4
9		6	7	6	7	7	6	1	3	6	7	6	3	2	2	3	3	0	1	3
0		6	6	5	6	6	5	0	1	4	5	5	2	3	0	1	0	2	3	5
Calibration Characters	(Gill Sans	4				4	4	4	4				4						2	
	(OCRB		8	8	8					5		7		5	7	1	3	2		2
	(Rockwell										4									

TABLE 5.13 Fourier Coefficients of Rockwell 371 numerals taken at 19 Polar Sampled Frequencies. Gill Sans, OCRB and Rockwell numerals were all considered in calibration of gain.

	1	2	3	4	5	6	7	8	9
Sampling Frequencies:	(2,90°)	(3,60°)	(3,-60°)	(4,-50°)	(4,0°)	(4,30°)	(4,60°)	(4,70°)	(4,90°)
Character									
1	2	0	0	1	7	5	2	3	5
2	4	0	1	1	4	2	4	6	7
3	4	1	1	2	5	5	3	5	7
4	6	6	5	2	7	7	2	2	1
5	5	2	1	2	3	3	1	2	5
6	6	4	3	3	2	2	0	1	3
7	2	2	0	1	6	1	5	7	7
8	6	3	3	0	3	3	0	2	4
9	6	3	3	2	3	2	0	1	3
0	6	2	2	2	1	0	2	3	4
Calibn. Characters (Gill Sans	4	4	4					2	
(OCRB				5	1	3	2		2

TABLE 5.14 Fourier Coefficients of Rockwell Numerals taken at 9 Frequencies

	Sampling Frequencies					
	1	2	3	4	5	6
Character	(3,-60°)	(4,-15°)	(4,30°)	(4,70°)	(5,-45°)	(5,45°)
			(a) ROCKWELL			
1	0	7	6	3	2	2
2	1	5	2	6	1	3
3	1	4	5	5	2	3
4	5	7	7	2	3	2
5	1	3	3	3	4	2
6	3	3	2	1	4	1
7	0	7	2	7	2	3
8	3	3	3	2	1	1
9	3	3	2	1	4	1
0	2	0	0	3	4	5
			(b) GILL SANS			
1	2	7	5	0	0	0
2	2	7	3	7	3	5
3	0	7	6	4	2	2
4	7	5	6	4	5	0
5	0	7	6	1	5	1
6	4	5	6	1	5	0
7	3	6	2	6	6	3
8	5	5	4	2	1	1
9	4	5	5	1	5	0
0	0	3	6	7	7	7
			(c) OCRB			
1	1	7	7	3	4	1
2	2	6	3	7	5	7
3	1	6	7	4	5	4
4	4	3	7	6	4	3
5	1	1	7	1	7	5
6	3	3	2	0	7	4
7	3	7	0	6	4	4
8	3	2	3	4	3	3
9	4	4	1	0	7	4
0	0	0	2	5	7	7
Calibn. Chctrs. (Gill Sans	4					0
(OCRB		7	3	2	5	

TABLE 5.15 (a), (b) and (c) Fourier Coefficients of Rockwell 371, Gill Sans and OCRB numerals taken at the Six Optimum Frequencies.

	Optimised Sampling Frequencies						
	1	2	3	4	5	6	7
Character	(1,90°)	(1.8,90°)	(2.6,-27°)	(1.8,63°)	(1.15,45°)	(2.5,27°)	(3.25,0°)
				OCRB			
1	2	5	0	3	6	2	6
2	0	7	4	7	0	3	4
3	0	6	1	3	6	6	3
4	6	6	7	5	7	1	2
5	2	4	4	2	7	3	5
6	6	1	7	0	7	6	4
7	2	6	7	6	2	2	1
8	5	5	3	3	7	3	7
9	6	1	7	0	7	6	5
0	4	6	6	5	5	7	7
				GILL SANS			
1	2	1	1	0	4	1	6
2	0	7	5	7	4	1	1
3	1	6	0	3	5	4	2
4	7	4	2	3	7	1	4
5	2	4	0	0	5	3	0
6	6	1	5	1	7	1	3
7	2	7	7	6	3	0	1
8	6	4	1	2	7	2	7
9	6	2	5	0	7	1	3
0	4	7	7	7	3	7	5
Immunity Factor:	10/10	8/10	5/10	6/10	6/10	5/10	5/10
Calibn. (OCRB			6 or 9	2	4		0
Chctrs. (Gill Sans	4	2			4	0	

Overall Immunity Factor: 9/14

TABLE 5.16 Fourier Coefficients of OCRB and Gill Sans numerals taken at Seven Optimised Frequencies

Sampling Frequencies							
$(1,90^{\circ})$		$(2.6,-27^{\circ})$		$(1.8,63^{\circ})$		$(3.25,0^{\circ})$	
Character	Voltage	Character	Voltage	Character	Voltage	Character	Voltage
0-2	1.1	G-3	1.5	0-6	1.7	G-5	0.8
G-2	1.5	0-1	1.7	0-9	1.7	G-2	2.5
0-3	1.7	G-5	1.9	G-5	1.8	0-7	2.7
G-3	2.4	G-1	2.1	G-1	1.9	G-7	2.7
G-1	2.9	G-8	2.6	G-9	1.9	0-4	3.2
G-5	2.9	0-3	2.7	G-6	2.0	G-3	3.5
0-5	3.3	G-4	3.7	G-8	3.4	0-3	3.7
G-7	3.4	0-8	3.9	0-5	3.5	G-6	3.8
0-1	3.6	0-2	5.2	0-1	4.1	G-9	4.2
0-7	3.6	0-5	5.6	G-4	4.1	0-2	5.3
G-0	4.9	G-2	6.1	0-3	4.4	0-6	5.3
0-0	5.2	G-9	6.3	G-3	4.5	G-4	5.4
0-8	5.9	G-6	6.6	0-8	4.7	0-9	5.5
G-6	6.9	G-0	7.7	0-4	6.5	0-5	5.7
G-8	6.9	0-0	7.8	0-0	6.7	G-0	6.0
0-6	7.1	0-4	8.0	0-7	6.9	0-1	6.8
G-9	7.2	G-7	8.4	G-7	6.9	G-1	7.4
0-9	7.2	0-7	8.6	G-0	8.3	G-8	7.9
0-4	7.3	0-9	9.4	G-2	9.0	0-8	8.7
G-4	9.8	0-6	9.8	0-2	9.8	0-0	9.8
Switching Levels:	4.75		6.9		5.6		5.8

TABLE 5.17 Voltages of OCRB and Gill Sans Characters taken at Four Fourier Spectrum Frequencies and arranged in numerical order.

Six Best Frequencies for Two Type Fonts

$(2.5,0^\circ)$		$(3.2,0^\circ)$		$(1,90^\circ)$		$(2.55,-27^\circ)$		$(1.85,63^\circ)$		$(1.65,80^\circ)$	
Character	Voltage	Character	Voltage	Character	Voltage	Character	Voltage	Character	Voltage	Character	Voltage
0-4	1.0	G-5	0.9	0-2	1.0	G-3	1.5	0-6	1.5	0-6	1.0
G-6	1.4	G-3	2.3	G-2	1.1	0-1	1.6	G-1	1.7	G-1	1.6
G-9	1.4	0-7	2.4	0-3	2.1	G-1	2.0	G-5	1.8	0-9	1.9
G-7	1.6	G-7	2.5	G-3	2.3	G-5	2.0	G-6	1.8	G-6	2.3
0-7	1.7	0-4	2.6	G-5	2.7	G-8	2.5	0-9	1.9	G-9	3.4
0-5	2.7	G-3	3.2	G-1	2.9	0-3	2.6	G-9	2.3	G-8	3.8
0-2	3.2	0-3	3.3	0-5	3.5	G-4	3.4	0-5	3.1	0-5	4.3
G-2	3.2	G-6	3.6	G-7	3.9	0-8	3.5	G-8	3.4	G-5	4.3
G-5	3.5	G-9	4.0	0-7	4.1	0-2	5.1	G-4	3.5	0-1	5.3
0-3	3.6	0-6	4.6	0-1	4.1	G-2	5.5	0-1	4.1	G-4	5.9
G-8	3.8	0-2	4.9	G-0	5.0	0-5	5.7	0-3	4.5	0-8	6.1
G-4	4.6	G-4	4.9	0-0	5.2	G-6	6.5	0-8	4.6	0-4	6.3
0-6	4.6	0-9	5.1	0-8	5.9	G-9	6.5	G-3	4.6	0-0	6.4
G-3	4.8	0-5	5.3	0-4	6.5	0-4	7.4	0-4	5.8	G-3	6.4
0-9	5.0	G-0	5.6	0-6	6.7	G-7	7.7	0-0	6.6	0-3	7.2
0-8	7.7	0-1	6.4	G-8	6.8	G-0	7.8	0-7	7.0	G-0	7.4
0-1	7.8	G-1	7.0	G-6	6.9	0-0	7.9	G-7	7.1	0-7	7.6
G-1	8.1	G-8	7.4	0-9	7.5	0-7	8.1	G-0	8.0	G-7	7.8
0-0	9.4	0-8	8.4	G-9	7.8	0-6	9.2	G-2	8.7	G-2	9.3
G-0	9.9	0-0	9.9	G-4	9.8	0-9	9.8	0-2	9.8	0-2	9.8
Switching Levels:-	6.35		6.15		5.0		6.55		5.6		5.1

TABLE 5.18 Voltages representing Fourier Coefficients of OCRB and Gill Sans numerals, taken at the six best frequencies and arranged in numerical order.

	1	2	3	4	5	6
Sampling Frequencies:	$(2.5,0^\circ)$	$(3.2,0^\circ)$	$(1,90^\circ)$	$(2.55,-27^\circ)$	$(1.85,63^\circ)$	$(1.65,80^\circ)$
Character						
1	2	1	0	0	0	1
2	0	0	0	0	2	2
3	0	0	0	0	0	2
4	0	0	2	1	1	2
5	0	0	0	0	0	0
6	0	0	2	1	0	0
7	0	0	0	2	2	2
8	1	2	2	0	0	1
9	0	0	2	1	0	0
0	2	1	1	2	2	2

TABLE 5.19 One bit encoded Fourier Coefficients for OCRB or Gill Sans numerals taken at the six best frequencies. 1's are not used for recognition. A "1" is allocated when either a different binary signal is produced by the same character in each type font or when the voltage produced by a character in either font is within $\frac{3}{4}$ of a volt either side of the switching level.