1884

THE DESIGN AND ENGINEERING OF A REACTOR TEST FACILITY FOR THERMAL PROCESSING OF BIOMASS

HENRY THOMAS WILSON B.Sc(Hons)

Master of Philosophy

THE UNIVERSITY OF ASTON IN BIRMINGHAM
April 1987

This copy of the thesis has been supplied on condition that anyone who consults it is understood to recognise that copyright rests with the author and Foster wheeler Power Products Limited and that no quotation from the thesis and no information derived from it may be published without the author's prior written consent.

The University of Aston In Birmingham

THE DESIGN AND ENGINEERING OF A REACTOR TEST FACILITY FOR THERMAL PROCESSING OF BIOMASS

Henry Thomas Wilson B.Sc.(Hon) April 1987

Summary

This thesis describes the design and engineering of a pressurised biomass gasification test facility. A detailed examination of the major elements within the plant has been undertaken in relation to specification of equipment, evaluation of options and final construction.

The retrospective project assessment was developed from consideration of relevant literature and theoretical principles. The literature review includes a discussion on legislation and applicable design codes. From this analysis, each of the necessary equipment units was reviewed and important design decisions and procedures highlighted and explored. Particular emphasis was placed on examination of the stringent demands of the ASME VIII design codes. The inter-relationship of functional units was investigated and areas of deficiency, such as biomass feeders and gas cleaning have been commented upon. Finally, plant costing was summarized in relation to the plant design and proposed experimental programme.

The main conclusion drawn from the study is that pressurised gasification of biomass is far more difficult and expensive to support than atmospheric gasification. A number of recommendations have been made regarding future work in this area.

Key Words

**Biomass, Pressure,Design,
Engineering, Costs**

DEDICATION

TO NANCE AND MO WITH LOVE AND THANKS

ACKNOWLEDGMENTS

I would like to express my sincere thanks to both Dr A.V. BRIDGWATER, my university supervisor and Mr D.G. BLOWS my industrial supervisor, for their constructive advice and guidance throughout this study.

I am grateful to the Directors and Staff of Foster Wheeler Power Products for their helpful support. In particular, I would like to express thanks to the Technical Director Mr R.M.V. BEITH, the Research Manager Mr F. HOUGHTON and the three Project Leaders: Mr D. TURNER, Mr P. HOLMES and Mr A. HILL who contributed so significantly to a complex and difficult project.

Thanks are also due to Dr E.L. SMITH of the Department of Chemical Engineering Aston University and Mr J. GIBBINS for their assistance on theoretical and computing aspects of the work.

I am indebted to the United Kingdom Department of Energy and the European Economic Community for the provision of research funding support, which enabled the project to proceed.

CONTENTS

		Page
SUMMARY		2
ACKNOWLEDGMENTS		4
LIST OF TABLES		13
LIST OF FIGURES		16
LIST OF APPENDICES		22
CHAPTER 1.0 -	**INTRODUCTION**	24
CHAPTER 2.0 -	**LITERATURE AND THEORY**	27
2.1	Background	27
2.2	Legislation	28
2.3	Design Codes	30
2.4	Materials of Construction	33
2.5	Theoretical Considerations	35
2.5.1	Principles of Gasification	35
2.5.2	Equilibrium Modelling	37
2.5.3	Computer Model	38
2.5.4	Design Parameters	39
2.5.5	Feedstock and Quality	39
2.5.6	Gasification Medium	40
2.5.7	Temperature	41
2.5.8	Pressure	42
2.5.9	Reactor Type	42
2.6	Pressurised Gasification of Biomass	45
2.6.1	Catalytic Gasification	48
2.7	Concluding Comment	51
CHAPTER 3.0 -	**DESCRIPTION OF THE TEST FACILITY**	64
3.1	Introduction	64
3.2	General Description	66

3.3	Design Parameters	66
3.4	Feed	72
3.5	Main Reactor	72
3.6	Partial Oxidation Reactor	74
3.7	Ash Removal	75
3.8	Furnace Vessel	75
3.9	Utilities and Services	76
3.10	Instrumentation and Control	76
CHAPTER 4.0 -	**SOLIDS FEED SYSTEM**	91
4.1	Specification	91
4.2	Evaluation and Options	91
4.2.1	High Pressure Feeders	91
4.2.2	Feed Elevation	94
4.3	Chosen Feed System	94
4.3.1	Funicular Hoist	95
4.3.2	Feed Hopper	95
4.3.3	Solids Feed Valves	96
4.3.3.1	Description of the Feed Tests	97
4.3.3.2	Test Conclusions	99
4.3.4	Control System Logic	100
4.3.5	Design	102
4.4	Operation	104
4.5	Safety	104
4.6	Commissioning	104
CHAPTER 5.0 -	**MAIN GASIFICATION REACTOR**	114
5.1	Specification	114
5.2	Evaluation of Reactor Configuration Options	116
5.2.1	General Considerations	116
5.2.2	Cross-Flow Reactor	117
5.2.3	Downdraft Reactor	117
5.2.4	Other Reactor Options	117
5.3	Detailed Design of Main (external) Reactor shell	118
5.3.1	Vessel Calculations	118

5.3.2	Description of Reactor Vessel	118
5.3.3	Material Properties	119
5.3.3.1	Neck Flanges	122
5.3.3.2	Stud Bolts	122
5.3.3.3	Nozzle Reinforcement	122
5.4	Reactor Vessel Fabrication	124
5.4.1	Sub-contracting	124
5.4.2	Reactor Girth Flanges	124
5.4.3	Tightening Torque	125
5.5	Refractory Selection for Gasifier Vessel	126
5.5.1	Chemical Considerations	127
5.5.2	Physical Considerations	127
5.5.3	Thermo-mechanical Behaviour and Design	129
5.5.4	Refractory Lining Construction for Gasification Reactor	129
5.6	Reactor Vessel Instrumentation	130
CHAPTER 6.0 -	**PARTIAL OXIDATION REACTOR**	142
6.1	Background	142
6.2	Specification	142
6.3	Evaluation and Options	144
6.4	Detailed Design	145
6.4.1	Reactor Size	145
6.4.2	Oxygen Injection Arrangement	146
6.4.3	Refractory Lining of the POX Vessel	147
6.4.4	Downstream Gas Cooling	148
6.4.5	Ignition Electrodes	149
6.4.6	Catalysts	150
6.4.7	Monitoring Reactor Performance	150
CHAPTER 7.0 -	**ASH REMOVAL SYSTEM**	161
7.1	Specification	161
7.2	Evaluation and Options	163
7.2.1	Enclosed Vibratory Conveyor	163
7.2.2	Quench Sluice	164

7.2.3	Lock Hopper	165
7.2.4	Screw Conveyor	166
7.3	Design and Manufacture of Screw Conveyor	168
7.3.1	Ash Characteristics	169
7.4	Conveyor Supports	172
7.4.1	Weight of Conveyor Plus Components	173
7.4.2	Reactor Cold Condition	173
7.4.3	Reactor Hot Condition	173
7.4.4	Vessel Expansion	173
7.5	Operational Considerations	174
7.5.1	Reception Hopper Bridging	174
7.5.2	Screw Jamming	175
7.5.3	Water Jacket	175
7.5.4	Thermal Insulation	176
7.5.5	Purge Gas and Seal	176
7.6	Instrumentation	177
7.7	Commissioning and Operation	178
CHAPTER 8.0 -	**GAS CLEANING SYSTEM**	185
8.1	Specification	185
8.2	Evaluation and Options	187
8.2.1	Background	187
8.2.2	Gas Cleaning Technologies	187
8.2.3	Particulate Removal	188
8.2.4	Tar Removal	188
8.2.5	Equipment Selection	188
8.3	Detailed Design	194
8.3.1	The Design of the Scrubber Quench System	195
8.3.2	Choice of Final Gas Temperature	195
8.3.3	Constraints on Scrubber Outlet Temperature	196
8.3.4	Calculation of Vapour Loading in Outlet Stream	196
8.3.5	Liquor Recirculation	198
8.3.5.1	Enthalpy Balance on Scrubber	198
8.3.6	Equipment Supply: Gas Cleaning	201

8.3.6.1	Twin Jet Venturi Scrubber Vessel	201
8.3.6.2	Shell and Tube Heat Exchanger	201
8.3.6.3	Liquor Recirculation Pump c/w Strainer and Discharge Valve	201
8.3.6.4	Liquor Blowdown Control Valve	202
8.3.6.5	Flash Blowdown Drum c/w Gas Vent and Drain	203
8.3.6.6	High and Low Level Sensors	204
8.3.6.7	Level Indicators and Transmitters	204
8.3.6.8	Water Make-up Pump c/w Non-return Valve	204
8.3.6.9	Pressure Relief Valve	205
CHAPTER 9.0 -	**FURNACE VESSEL**	213
9.1	Specification	213
9.2	Evaluation	216
9.3	Detailed Design	216
9.3.1	Burner Nozzle Compensation	217
9.3.2	Furnace Refractory	218
9.3.3	Ignitor Arrangement	222
9.3.4	Burner Design	224
CHAPTER 10.0-	**STEAM SUPERHEATER**	236
10.1	Specification	236
10.2	Options and Evaluation	238
10.2.1	Options	238
10.2.2	Evaluation of Options	239
10.2.2.1	Conventional Steam Plant	239
10.2.2.2	Enclosed Electric Element	239
10.2.2.3	Direct Steam Injection	240
10.2.2.4	Direct Electric Heating	240
10.3	Detailed Design	241
10.3.1	Boiler Selection and Specification	244
10.3.2	Power Requirements	244
10.3.3	Power Supply	245
10.3.3.1	Calculation of Superheater Tube Length	245

10.3.4	Heat and Mass Transfer	247
10.3.5	Busbar Clamps	248
10.3.6	Tee Blocks	248
10.3.7	Materials and Stress Analysis	249
10.3.7.1	Hydrostatic Pressure Test	251
10.3.8	Insulation	251
10.3.9	Superheater Tube Welding	252

CHAPTER 11.0- UTILITIES AND MISCELLANEOUS PLANT 268

11.1	Utilities	268
11.1.1	Services	268
11.2	Miscellaneous Plant	269
11.2.1	Product Gas Flare	269
11.2.1.1	Flare Operation	270
11.2.2	Piping	271
11.2.2.1	Scrubber Outlet Sampling Tee	271
11.2.3	Recycle Gas Fan	272
11.2.3.1	Fan (Blower) Sizing	273
11.2.4	Gas Flow Rate Measurement	275
11.2.5	Equipment Support Structure	277

CHAPTER 12.0- INSTRUMENTATION AND CONTROL 287

12.1	General Description	287
12.2	Process Control	287
12.2.1	Process Control Modes	287
12.2.1.1	Temperatures	287
12.2.1.2	Plant Pressure Control	288
12.2.1.3	Bed Level Control	289
12.2.2	Product Gas Analysis	290
12.2.3	Safety Interlock Systems	291
12.2.3.1	Main Plant Interlocks	291
12.2.3.2	Local Plant Interlocks	291
12.2.4	Control Room	292
12.3	Research Instrumentation	292
12.4	Data Acquisition	293

CHAPTER 13.0- SAFETY 294

13.1	Introduction	294
13.2	Hazard Analysis	294
13.2.1	Properties of Process Mixtures	295
13.2.2	Process Routes	296
13.2.3	Process Reliability	297
13.2.4	Plant Start-up and Shut-down	298
13.2.4.1	Purging	298
13.2.4.2	Venting	299
13.2.4.3	I.E.E. Statutory Regulations	299
13.2.5	Process and Mechanical Design	300
13.2.5.1	Process Design	300
13.2.5.2	Mechanical Design	300
13.2.6	Operating Limits	301
13.2.7	Personnel Protection	301
13.2.8	Plant Layout	301

CHAPTER 14.0- PLANNED EXPERIMENTAL PROGRAMME 304

14.1	Cross-flow	305
14.2	Cross-flow + POX	305
14.3	Downdraft	306
14.4	Downdraft + POX	307

CHAPTER 15.0- TEST PLANT COSTING 313

15.1	Estimate of Equipment Costs	313
15.2	Project Expenditure	313

CHAPTER 16.0- DISCUSSION 317

16.1	Technical Problems	317
16.2	Design Problems	319
16.2.1	Design Codes	319
16.2.2	Safety Considerations	319
16.2.3	Materials	320
16.2.4	Sub-contracted and Bought-out Equipment	321

16.2.4.1 Design Procedures 321
16.2.4.2 Manufacturing Difficulties 321
16.2.4.3 Industrial Problems 322
16.2.4.4 Supervision 322
16.3 Project Management 323
16.3.1 Management Systems 323
16.3.2 Costing 324

CHAPTER 17.0- CONCLUSIONS 325

17.1 General Observations 326
17.2 Findings 326

CHAPTER 18.0- RECOMMENDATIONS 330

APPENDICES

LIST OF REFERENCES

LIST OF TABLES

Table Number	Description
Chapter 2.0	
2.1	Examples of Relevant Legislation
2.2	Gasification Reactions
2.3	Principal Design Elements
2.4	Gasification Media Options
2.5	Comparative Reactor Characteristics
2.6	Pressurised Gasification Routes
2.7	Catalytic Steam Gasification
Chapter 3.0	
3.1	Principal System Units
3.2	Flow Rates
Chapter 4.0	
4.1	Potential High-Pressure Feeders for Wood Residues
4.2	Test Feed Materials
4.3	Experimental Results
Chapter 5.0	
5.1	Reactor vessel design specification
5.2	Material Properties
5.3	Minimum Thickness
5.4	Flange Connections
5.5	Reinforcement Requirements

Table Number	Description
Chapter 6.0	
6.1	Specification of the POX Reactor
6.2	Comparative Features POX Alternatives
Chapter 7.0	
7.1	Specification of Ash Removal System
7.2	Comparative Features: Selected Ash Removal Options
7.3	Summary of Results
Chapter 8.0	
8.1	Gas Cleaning System Specification
8.2	Summary of Gas Cleanup Systems
8.3	Comparative Features of some Commercial Gas Cleaning Systems
8.4	Venturi Scrubber Features
8.5	Venturi Scrubber Particle Removal Efficiency
8.6	Estimated Gas Composition (Dry)
8.7	Water:Gas Ratio versus Pressure
8.8	Liquor Recirculation Rate
8.9	Gas Cleaning Plant: Equipment List
8.10	Scrubber Blowdown Flowrates
Chapter 9.0	
9.1	Summary Furnace Vessel Specification
9.2	Furnace Vessel Branch Connections
9.3	Furnace Refractory Construction
9.4	Furnace Heat Transmission
9.5	Refractory Bake-out Sequence
Chapter 10.0	
10.1	Steam Superheater Design Specific-
10.2	System Comparisons: Superheated Steam

Table Number	Description
Chapter 10.0(contd.)	
10.3	Superheater Design Summary
10.4	Superheater Stress Ratings
10.5	Incoloy Design Stress Data
10.6	Insulation Heat Loss (W/m) versus Thickness
10.7	Reccommended Lining Thicknesses
Chapter 11.0	
11.1	Recycle Fan Specification
11.2	Fan Pressure versus Volume Flow
11.3	Orifice Plate Flowmeters
11.4	Weights of Reactors and Ancillary Equipment
Chapter 14.0	
14.1	Proposed Experimental Programme
14.2	Proposed Timetable For Experiments
14.3	Summary of Experimental Parameters
Chapter 15.0	
15.1	Breakdown of Proposal Costs
15.2	Proposal Cost Breakdown in Stages
15.3	Equipment Cost Breaakdown
15.4	Final Cost Summary

LIST OF FIGURES

Figure Number	Description
Chapter 2.0	
2.1	Gasification with Steam and oxygen-equilibrium with no solid carbon
2.2	Operating limits for steels in hydrogen service
2.3	Simplified Flowchart for a general gasifier computer model
2.4(a)	System diagram for fixed bed gasifiers
2.4(b)	System diagram for entrained and fluidised bed gasifiers
2.5	Gasification with oxygen only - Equilibrium with solid carbon. Pressure: 10 bars
2.6	Gasification with steam only - equilibrium with solid carbon: Pressure 10 bars
2.7	Reactor types and Process conditions for gasification of wood to synthesis gas
2.8	Main characteristics of four C.E.C. supported gasification pilot plant projects

Figure Number	Description
Chapter 2.0 (Contd)	
2.9	Summary of development items
2.10	The Creusot Loire process
2.11	Lurgi´s circulatory fluidised bed gasifier
2.12	MINO outline flow scheme
2.13	SERI Downdraft pressurised gasifier
2.14	Novelerg´s moving bed gasifier
2.15	Novelerg´s gasifier
Chapter 3.0	
3.1	Process Schematic
3.2	Test Plant
3.3	Gasification Test Rig
3.4	Line Designation Diagram
3.5	View of Reactor Vessel and Feeder System
3.6	View of Feed Valve Arrangement
3.7	Downdraft Reactor
3.8	Partial Oxidation Reactor Awaiting Installation
3.9	Char/Ash Removal System Arrangement for Biomass Gasification Test Rig
3.10	View of Furnace Vessel and Reactor
3.11	Nucleonic High Level Alarm
3.12	View of Completed Reactor and Feed System
3.13	Piping and Instrumentation Diagram for Biomass Gasification Test Rig Showing Air Option and Partial Oxidation Reactor
Chapter 4.0	
4.1	Funicular Hoist
4.2	Feed Valve Schematic
4.3	Feed Valve Arrangement
4.4	Feed Valve Model

Figure Number	Description
Chapter 4.0(contd.)	
4.5	Feed Valve Logic Diagram
4.6	Feed Valve Crack Damage(a)
4.7	Feed Valve Crack Damage(b)
4.8	Feed Valve Logic Schematic (Logic Sequences)
4.9	Feed Valve Logic Schematic (Inputs and Outputs)
Chapter 5.0	
5.1	Test Rig Reactor Vessel Cross-flow
5.2	General Plant Arrangement showing POX
5.3	Schematic: Cross-flow Gasifier
5.4	Biomass Reactor No. 1
5.5	Biomass Reactor No. 1 - Fabrication
5.6	Gasifier Vessel Design Flow Diagram (with feed-back)
5.7	Main Reactor and Furnace Vessels Undergoing Hydro-test
5.8	Main Reactor Upper Section Showing Sleeve Installation
5.9	Reactor Vessel Lower Section Showing Lining Shuttering and Exit Sleeve
5.10	Main Reactor Upper Section Showing Lining Step(a)
5.11	Main Reactor Lower Section Showing Lining Step(b)

Figure Number	Description
Chapter 5.0(contd.)	
5.12	Underside of Reactor Vessel Showing Thermocouple Location
Chapter 6.0	
6.1	Fluidized Bed POX
6.2	Tubular Reactor
6.3	Sub-stoichiometric Burner
6.4	Venturi POX Reactor
6.5	Partial Oxidation Reactor
6.6	Oxygen Injection Quarl in Venturi Reactor
6.7	POX Systems
6.8	Oxygen Supply Scheme
6.9	POX Ignition Electrodes Assembly
6.10	Unlined POX Ignition Electrode Assembly
Chapter 7.0	
7.1	Enclosed Vibratory Conveyor
7.2	Quench Sluice
7.3	Double Lock Hopper System
7.4	AS FIGURE 3.9
7.5	Reactor Spring Hanger Supports
7.6	Spring Support Hangers
Chapter 8.0	
8.1	Conceptual Plant Arrangement showing Gas Clean-up System
8.2	Particulate and Tar Loadings in Biomass Gasifiers
8.3	Particle Size Classification and Useful Collection Equipment
8.4	Typical Efficiencies for Various Gas Cleaning Methods
8.5	Simplified Schematic Gas Clean-up With Venturi Scrubber

Figure Number	Description
Chapter 8.0(contd.)	
8.6	Castletree Engineering: General Arrangement of Two Stage Jet Venturi/Cooler(best available copy)
8.7	Castletree Engineering: General Arrangement of Shell and Tube Heat Exchanger
8.8	Scrubber Manifold
Chapter 9.0	
9.1	System Schematic Showing Furnace Vessel
9.2	Peckston Engineering: Furnace Vessel (best available copy)
9.3	Furnace Arrangement for Biomass Gasification Test Rig
9.4	Proposed Ignitor Arrangement for Furnace Burner
9.5	Ignition Electrode Assembly
9.6	Air-Propane Burner
9.7	View of Partially Assembled Test Plant
9.8	Furnace Vessel Burner Assembly Awaiting Lining Installation
9.9	Installation of Furnace Lining
9.10	Furnace Vessel Shuttering
Chapter 10.0	
10.1	Steam Superheater Schematic
10.2	Enclosed Electric Element
10.3	Direct Steam Injection
10.4	Direct Electric Superheater
10.5	Detail: Thermal Sleeve
10.6	Direct Electric Superheater Schematic
10.7	Superheater Resistance Circuit
10.8	Calc´n Procedure: SuperheaterTubes

Figure Number	Description
Chapter 10.0(contd.)	
10.9	Detail:Tee Blocks for Superheater
10.10	Detail:Busbar Clamps
10.11	$1\frac{1}{4}$ in NB Superheater Coil
10.12	Detail:Extension to Staging
10.13	Transformer Staging
10.14	Resistivity versus Metal Temperature for Incoloy 800
10.15	View of Superheater Tubing
10.16	View of Test Plant Showing Completed Superheater Bank, Feeder System and Furnace
Chapter 11.0	
11.1	Stoic Gasifier Unit
11.2	Product Gas Flare Awaiting Installation
11.3	Product Gas Flare
11.4	Scrubber Outlet Sampling Tee
11.5	Blower Vessel
11.6	Test Rig Support Structure
11.7	Support Structure
11.8	Flow Diagram for Gas Chromatography Sampling and Injection System
Chapter 13.0	
13.1	Inert Gas Distribution
Chapter 14.0	
14.1	Test Plant Approaching Completion
14.2	Reactor Configurations

LIST OF APPENDICES

Appendix Number	Description
Chapter 2.0	
2.1	Health and Safety Policy
2.2	IEE Statutory Regulations and Associated Memoranda
2.3	Acceptable ASME Referenced Standards
2.4	DEPROG Computer Output
2.5	**Author´s Literature**
Chapter 4.0	
4.1	Biomass Feed Analysis
Chapter 5.0	
5.1	Main Reactor Design Calculation Check
5.2	Integral Hub Flange Rating
5.3	Thermal Insulation: Technical Information and Heat Transmission
5.4	Heat Transfer in Reactor Nozzles
Chapter 7.0	
7.1	Conveyor Support Springs
7.2	Molochite Screen Analysis
Chapter 8.0	
8.1	Scrubber Design Check Calculations
Chapter 9.0	
9.1	Furnace Burner Nozzle: Reinforcement Calculation
9.2	Oxy-Propane Burner Cooling Estimate
Chapter 10.0	
10.1	Specimen Calculation-Superheater Thermal Design

10.2 Superheater Busbar Clamps
10.3 Example of Welding Procedure
10.4 Vaporax Steam Generator
10.5 Superheater Tube Design Programme
10.6 Transformer:Scott Connection detail

Chapter 11.0

11.1 Heat Loss From Sample Tube
11.2 Calculations for Orifice Plates in Product Gas Line
11.3 Blower Vessel Design Calculations

Chapter 13.0

13.1 Determination of Type and Extent of Zone

Chapter 15.0

15.1 Equipment and Sub-contract Costs

....**"Look upon my works, ye Mighty, and despair!"....**

Ozyemandias

P.B Shelley (1792-1822)

1.0 INTRODUCTION

Biomass in the form of a cellulosic energy crop, biological by-product or waste, represents a significant renewable fuel resource. In its solid form utilization is restricted, due to its limited handling flexibility. As a result, in numerous international research centres, programmes have, or are being executed, with a view to converting it into more convenient fluid forms. Of particular interest and potential strategic importance, is the possibility of processing a given biomass feedstock, such as wood, into a liquid fuel such as methanol via thermochemical treatment routes.

Gasification of solid fuels to produce gas as a chemical feedstock, has been practised world-wide for many years. It is a process which produces a gas rich in carbon monoxide and hydrogen. Research has concentrated on the production of a suitable synthesis gas from a wide range of feeds: the synthesis gas being subequently catalytically converted to methanol or other products. Whilst in many applications this gas, or its derivatives, is combusted to generate heat or power, the chemical industry also uses hydrogen and carbon monoxide in reactions to produce new compounds. In the UK the present demand for hydrogen and carbon monoxide for chemical synthesis, has an equivalent fuel value of approximately 900 million therms per year [1.1]. In perspective, this represents approximately 15% of the natural gas used by UK industry (1985).

The major uses of synthesis gas are for the production of ammonia and methanol. Methanol is used principally for making adhesives, particularly for chipboard and plastics. It may also be used as a petroleum extender. Smaller quantities of synthesis gas are used to make other

alcohols.

Although gasification of biomass has been identified as a feasible route for the production of liquid fuels, there are numerous difficulties still to be resolved. The extensive research and development effort highlights one point in particular - the most economic process route(s) still awaits validation. Many technical problems are still unresolved, specifically in the area of process plant design and optimization. Without a cost basis for plant selection, operational and hence final product costs, will be impossible to assess accurately, except on an "as-built" basis. This is unacceptable in relation to the investment required for such a plant.

The European Economic Comunity (EEC) depends on imported oil for approximately 37% of its energy requirements despite such measures as energy saving, North Sea oil developments and increased utilization of gas, nuclear power and coal, which have substantially reduced this dependence [1.2]. By the end of the century, the bio-wastes' potential for conversion into energy has been estimated to be 90 mtoe for Europe alone [1.2]. Recognizing the importance of funding research work in this area, the EEC and the United Kingdom Department of Energy entered into a series of cooperative R & D programmes, of which the subject of this thesis is one example.

The main objective of the work, was to design, build and operate a versatile biomass gasification test facility for the production of synthesis gas. The plant was to be run at elevated pressure and temperature, in order to evaluate both the engineering requirements and the thermochemical behaviour of pressurised gasifiers; when being fed on biomass rather than the more traditional coal or lignite. A limited parallel theoretical programme was also initiated, to provide process insight with a view to optimization and prediction of plant performance.

When the study was initially proposed, the Organization of the Petroleum Exporting Countries (O.P.E.C.) was heavily influencing prime fuel energy costs. By the time the plant was built and ready to be commissioned, fuel prices had dropped and stabilized. This resulted in an unfavourable financial climate for the commercial introduction of gasification technology to generate methanol from biomass - except for a few site specific situations. Also, by the time commissioning of the test facility commenced, substantial technical difficulties had been experienced in the design and construction phase of the test plant. These two factors created a situation that caused the programme of work to be terminated early.

Although there is an extensive body of literature reporting on the mechanical/thermal design of pressure vessels, there is only limited information available in relation to the general design of pressurised biomass gasification test plant and there is virtually none in the public domain on the detailed design aspects.

The potential importance of the completed work in relation to future activity in this area, either pilot plant, demonstration plant or full commercial scale, could be significant. It is considered therefore, that objective analysis and assessment of the plant design, highlighting the procedural steps involved, represents a useful advance of knowledge in the field.

2.0 LITERATURE AND THEORY

2.1 Background

Thermochemical gasification has been practised for over 150 years. The earliest commercial and domestic use (from 1830 onwards) was the supply of large parts of London with gas lighting [2.1]. The early gasworks used iron retorts to distill, usually coal, and sometimes biomass or wastes, to produce gas, coke and oils. A variety of techniques, such as cyclic air/steam blowing into an incandescent coke bed, were used to generate 'producer' gas or 'blue water gas' depending on the retort equipment. The gas was either used directly for heat and light, or used to operate spark and diesel engines. By the 1920's Europe was running trucks and tractors on 'producer gas'. These early operations did not achieve wide acceptance except during the war years, but some development continued, aimed at reducing tar levels and improving efficiency.

During World War II, there was a massive resurgence of interest in these systems, caused by the shortage of liquid fuels and a wide range of fairly reliable but inefficient units were developed [2.2]. The end of the war with the ready availability of the more convenient liquid fuels effectively terminated the fuel gas developments.

The formation of the O.P.E.C cartel, with the subsequent international movements in oil prices in 1973, created renewed interest in gasification, both for gas and liquid fuels' production. A considerable number of research projects were initiated by both government agencies and individual companies around the world from early 1970 onwards. In many instances, joint collaborative research programmes were entered into and undertaken by industry, being part funded by governments or international agencies.

This thesis relates to a retrospective technical and engineering assessment of one such programme which was directed to the design, construction and operation of a versatile pressurised biomass gasification test facility. Five key areas associated with the design and engineering of the test facility are reviewed and discussed in this Chapter:

a) Legislation
b) Design Codes
c) Materials of Construction
d) Theoretical Considerations
e) Pressurised Gasification of Biomass

2.2 Legislation

The design, construction and operation of a gasification test plant is a complex task. As the operating plant is potentially hazardous in a number of respects, for example, pressurised operation and toxic gas production, severe restrictions must be placed on design methodology, to ensure compliance with relevant statutory instruments. The following provisions are not exhaustive, but they do reflect the necessarily cautious approach to plant design. There may be alternative management interpretation of the relevant enactments on different UK sites, and other countries will operate to different standards.

The subject plant was located on an industrial manufacturing site at the FWPPL Works in Hartlepool; therefore, The Factories Act, 1961 [2.3], applied. This Act contains general provisions for Health, Welfare and Safety. In all instances, The Health and Safety at Work etc. Act, 1974 [2.4] is adhered to as a matter of company policy. The FWPPL policy statement is reproduced in Appendix 2.1. Particular examples of the requirements are shown in Table 2.1. A useful 'vade-mecum' is 'Redgrave's Health and Safety in Factories' which summarizes and discusses the main legislative instruments related to

factories, and also associated miscellaneous enactments [2.5]. Halsbury is the definitive authority [2.6].

TABLE 2.1

Examples of Relevant Legislation in the Plant Design

Area	The Enactment	Source
Product gas flare	Clean Air Act, 1968	[2.7]
Gamma switch (feed)	Radioactive Substances Act,1960	[2.8]
Disposal of toxic/ hazardous liquids	Public Health Act,1961	[2.9]
Atmospheric emissions	Alkali and Works Regulation Act,1951	[2.10]
Handling/storage oil fractions	Petroleum (Consolidation) Act,1928	[2.11]
Use of asbestos	Asbestos Regulations,1969	[2.12]
Fire hazards	Fire Precautions Act,1971	[2.13]
Staff welfare	Employment Medical Advisory Service Act, 1972	[2.14]

It should be noted, that most of the above enactments are implicit statutory provisions, so far as The Health and Safety at Work etc. Act is concerned.

Electrical and control instrumentation was installed in accordance with The Institute Of Electrical Engineers (IEE) Regulations [2.15]. Appendix 2 of these regulations, reproduced as Appendix 2.2 summarizes the principal legal requirements.

2.3 Design Codes

Any manufacturing organisation, through commercial necessity, including for example, meeting Health and Safety and insurance requirements, has to produce equipment in accordance with acceptable procedures and practices. Depending on the industry, agreed codes of practice, design codes, and manufacturing procedures are established, to set standards for safe, efficient design. These can have both national and international recognition. They are also important from the point of insurance cover, in that acceptable and verifiable design and construction are paramount considerations for the purpose of claims. There are also legal implications in failing to comply with the statutory instruments discussed in section 2.2.

In the UK, some organisations such as Rolls Royce and Associates (RR&A) or the Central Electricity Generating Board (CEGB), set their own standards and by association these sometimes emerge as industry standards. FWPPL is qualified (certificated) to undertake construction to many of these. As a result of the FWPPL American background (as a wholly owned subsidiary), there is a long-standing familiarity with American design standards. The pressurised gasifier plant was thus designed generally in accordance with The American Society of Mechanical Engineers (ASME) Boiler and Pressure Vessel Code and the American National Standards Institute (ANSI) Code for Pressure Piping. Similar governing bodies operate in the UK, France and Germany. Equipment in other countries is designed according to the codes of the International Standards Organisation (ISO).

The ASME standards are divided into different divisions, depending on application. The pressurised gasifier reactor was considered as an unfired pressure vessel and the applicable design standard was ASME VIII Division I [2.16]. For the scope of this division, pressure vessels are containers for the containment of pressure, either internal or external. This pressure may be obtained from an external source, or by the application of heat from a direct or indirect source, or any combination of these.

Division I is divided into a number of Subsections, Mandatory Appendices, and Nonmandatory Appendices. Subsection A consists of part UG, covering the general requirements applicable to all pressure vessels. Subsection B covers specific requirements that are applicable to the various methods used in the fabrication of pressure vessels. This consists of Parts UW, UF and UB dealing with welded, forged and brazed methods respectively. Subsection C covers specific requirements applicable to several classes of material used in pressure vessel construction. It also contains tables of maximum allowable stress values for these materials.

The Mandatory Appendices address specific subjects not covered elsewhere within the division and their requirements are mandatory when the subject covered is included in construction under this division. The Nonmandatory Appendices provide information and suggested good practice. For a more extended discussion the reader is referred to the ASME code introduction [2.16].

Throughout this thesis, reference is made to particular sections or subsections of the ASME VIII Division I design or other applicable standard. For convenience, the relevant section accessed is quoted locally to any calculation undertaken and referenced back to the basic division or standard.

The equivalent British Standard (BS) for unfired pressure

vessel design is BS 5500 [2.17]. This standard is very similar to ASME VIII but, for the calculation procedure required, is closer to ASME VIII Division II, which involves more detail than Division I. Division II procedures permit higher allowable stresses than for comparable materials under Division I codes. The rules of Division II are more restrictive in the choice of materials and more precise design and inspection procedures are required. As a rule, the designer has to strike a balance between saving on material costs and expending additional effort on the design calculations and inspection. For this test plant, the simplified procedures in Division I were considered appropriate.

BS design standards were used interchangeably with Americian standards in the design calculations and material specifications particularly, as in the case of nozzles, flanges, and similiar components, the data available from UK vendors was largely based on British Standards. The acceptable referenced standards for ASME VIII Div I are reproduced in Appendix 2.3 [2.16]. For design generally in accordance with ASME VIII Div I, the equivalent BS standards were used (As all standards are continuously updated, this discussion refers to the latest edition of ASME VIII and other standards used).

It should be noted, that the use of mixed (British, German and American) standards in conjunction with industry 'custom and practice' has created a dilemma for the author in interpreting design 'units'. Whilst SI units are desirable, from the point of simplification and unification, the standards available at the time the design was undertaken, were available in either imperial or metric units, but not always both. Calculations were performed using the available data sources. This has resulted in the procedures and findings being reported in both systems. Additionally, the 'custom and practice' element in the UK, allows for some parallel unit systems to maintain outside the accepted SI system due to common

usage. A further complication is the fact that some standards were converted to the SI system as the work was progressing.

To resolve the mixed unit problems, design information is reported in the manner executed and, where appropriate, critical figures are converted to either imperial or metric for clarification.

2.4 Materials of Construction

Due to the anticipated high temperatures needed for gasification, (up to 1200 C) and the projected plant operating pressures, (up to 30 bar g), an early decision was taken to install refractory lining in the furnace and gasifier, to permit the use of ordinary carbon steel for vessel shell construction. From the standpoint of strength alone, the economics favour carbon steel at temperatures below about 440 C ([2.18] - a particularly good reference for materials selection for high pressure applications). Following discussions with the refractory suppliers, a maximum metal temperature of 350 C was specified for the main reactor and furnace vessels.

Reference to BS 1501 [2.19] indicated that the material specified by BS 1501:224(32B) would have the required thermal and mechanical properties. It was shown that the presence of molybdenum would act as a steel base strengthener at elevated temperatures [2.18]. Material to BS 1501:224(32B) contains approximately 0.25% chrome and 0.1% molybdenum. A detailed study on use of molybdenum in pressure vessel design is recommended for those wishing to pursue the topic in greater depth [2.20].

Hydrogen attack at low temperatures, usually termed 'hydrogen embrittlement' from absorption of atomic hydrogen, was investigated as a possible design problem, because gasification product gases usually contain a significant amount of hydrogen. The hydrogen atoms

diffuse to voids, lattice imperfections or low angle grain boundaries, where they collect and form molecular hydrogen. At higher temperatures, hydrogen atoms can react with carbon to form methane (CH_4) causing, what is commonly called 'hydrogen damage'. In both mechanisms, the resultant internal pressure forms blisters, laminations, cracking and drastically reduces the strength and ductility of the base metal.

A computer analysis, based on the theoretical equilibrium modelling studies discussed in 2.5.2 below, was performed, to determine the pressure at which the maximum hydrogen pressure would occur within the proposed trials. This was estimated to be 30 bar g, from the invariance in gas composition shown in Figure 2.1, which arises at approximately 10 bar g. A typical computer output from this analysis is given in Appendix 2.4. It was shown by thermodynamic equilibrium calculations (sections 2.5.2 to 2.5.3 and Appendix 2.5) that the the maximum hydrogen content will occur at an oxygen flow of 10 kg/h (the maximum flow for the system) and a steam flow of between 11 and 60 kg/h. The peak hydrogen mole fraction is about 0.297 for a steam flow of 20 to 30 kg/h. The peak hydrogen partial pressure is therefore:
(30 x 0.297) = 8.91 bar g

From Figure 2.2 [2.21], it can be seen that a maximum operating temperature of 500 C, at a maximum operating pressure of 8.91 bar (252 psi) for a 0.25% chrome, 0.1% molybdenum steel, poses no risk of significant embrittlement of the material from hydrogen attack.

The superior qualities of Incoloy 800 led to its selection for the steam superheater. These properties are detailed in the manufacturer's catalogue [2.22]. The initial choice of Incoloy 800 was based on previous in-house experience. In general, the Incoloy alloys exhibit good corrosion resistance and low creep characteristics at the combined pressure/temperature conditions maintaining in

the superheater, (up to 30 bar g with metal temperatures of 800-900 C). The superheater was constructed from both Incoloy 800 and Incoloy 800H to limit use of the more costly 800H. The lower grade Incoloy was used at the cooler, steam input end of the superheater bank. Incoloy 800H is an enhanced austenitic solid solution alloy with improved creep-resistant characteristics compared with Incoloy 800. The specialist sub-contractor appointed to manufacture the superheater current clamps, found the 800H very difficult material to work with, it being particularly damaging to machine tools because of its hardness.

2.5 Theoretical Considerations

2.5.1 Principles of Gasification

Gasification may be viewed simply as partial combustion. If insufficient air is present to complete all the chemical reactions which take place in normal combustion, the resultant products are a mixture which are broadly categorised as condensible or non-condensible. Ash is also produced.

The non-condensible products are typically; carbon monoxide (CO), carbon dioxide (CO_2), methane (CH_4) and hydrogen (H_2). These products may be diluted with nitrogen (N_2) in the case of air, rather than steam or pure oxygen gasification. Small quantities of higher hydrocarbons are also produced, depending on the reactor and the operating conditions. The condensible fraction of the reaction products will, in most cases, be small in relation to the amount of water present - usually less than 5% (by weight) of input feed (dry basis).

There are three key steps in the gasification process:

a) Feedstock drying (this may occur both external to the process and within the process)

b) Pyrolysis (thermal distillation. Note:- Pyre: fire; lysis: a loosening); and

c) Partial oxidation or gasification

All of these processes are widely described in the literature and the reader is referred in particular to, SERI [2.23] and Bridgwater's publications [2.24].

Although the gasification reactions are very complicated because of the relatively unknown mechanisms involving pyrolysis products, the most important reactions are generally considered to be those shown in Table 2.2.

TABLE 2.2

Gasification Reactions

			Enthalpy of Reaction KJ/mol
Heterogeneous Reactions			
$C + {}^{1}/_{2}O_2$	=	CO	-110.6
$C + O_2$	=	CO_2	-393.8
$C + CO_2$	=	$2CO$ (Boudouard)	+172.6
$C + H_2O$	=	$CO + H_2$ (Water gas)	+131.4
$C + 2H_2$	=	CH_4	-74.9
Homogeneous Reactions			
$CO + H_2O$	=	$CO_2 + H_2$	-41.2
$CH_4 + H_2O$	=	$CO + 3H_2$	+201.9

2.5.2 Equilibrium Modelling

As noted in chapter 1.0, the test plant was constructed with the primary objective of producing synthesis gas suitable for converting into methanol (see Appendix 2.5). Actual production of methanol was not to be undertaken but, by employing a proprietary methanol plant design programme (ICI low pressure process), theoretical methanol yields could be determined, based on gasifier product gas composition. The test plant was therefore designed to maximize process flexibility in order to permit examination and possible optimization of the effects of a wide range of variables on product gas composition. The range of variables, including, for example temperature, pressure, gasification medium and reactor configuration, was too large to execute a realistic experimental programme. Equilibrium modelling was therefore proposed for a limited, preliminary examination of the interactive variables, in order to 'target' the experimental work (see chapter 14).

In the context of the plant design and the experimental progamme, the main function of an equilibrium model is to predict the composition, flow rate or temperature of the products from a gasifier [2.25]. This is achieved primarily by applying the principles of thermodynamic equilibrium to the mass and energy fluxes in and out of a suitably defined system, without consideration of the processes taking place. In practice, internal conditions determine a number of factors, principally heat losses, pyrolysis product composition and evolution from the system, ash temperature and composition. These effects can be allowed for by empirical correlations taken from experimental data.

Because relatively few internal details of the system need to be known, equilibrium models are quick and easy to use for such tasks as estimating the performance of an existing gasifier on a new fuel, or establishing the

operating envelope for a new gasifier design. The small number of parameters involved also makes it easy to develop a concept of the model and interpreting gasifier performance in equilibrium terms can be more helpful than using an array of figures covering, for example, feed and gas analyses, gasifier efficiencies, and so on. Conversely, because it ignores the effect of internal processes, such as pyrolysis, an equilibrium model cannot be used for detailed gasifier design, unless the gasifier operates under equilibrium conditions. If the effect of such factors as internal geometry on performance is required, a more complete kinetic model must be used, for example, Yoon, et al [2.26]. This type of model however, will usually take more time to produce and to use, while its accuracy will depend on the quality of data, such as fuel reactivity, which may not always be readily available. There appears to be a good case to use equilibrium models first for many applications, and to have recourse to kinetic models only when the former are known to be inappropriate for a particular task.

Many previous workers have described the use of equilibrium/mass balance/enthalpy balance models to analyse gasification systems, for example, Gumz [2.27], Edmister, et al [2.28], Von Fredersdorff and Elliott [2.29], and tabulated data describing equilibrium with solid carbon in C-H-O systems has been presented by Baron, et al [2.30].

2.5.3 Computer Model

A general flowchart for a computer equilibrium model developed at FWPPL is shown in Figure 2.3. Most of the calculation procedures used in the model (e.g. mass and enthalpy balances, derivation of equilibrium constants), are straightforward and well covered in the literature [2.30], [2.31]. Details are given of the work carried out for this project in Appendix 2.5. It is convenient to use polynomial expressions for gas enthalpy and standard free

energy values in the programme. Suitable formulae are given in Baron, et al [2.30] and the API Technical Data Book [2.32]. Some typical results from the evaluations are illustrated in Figures 2.5 and 2.6.

2.5.4 Design Parameters

As the application had been determined to be production of synthesis gas or medium heating value fuel gas, the design could be progressed. Some of the principal design elements in relation to selection and operation of a gasification plant are summarized in Table 2.3 below.

TABLE 2.3
Principal Design Elements

Feedstock and Quality
Gasification Medium
Reactor Temperature
Reactor Pressure
Reactor Type

2.5.5 Feedstock and quality

The important feed characteristics are:

a) Energy content; moisture, ash and elemental composition; usually determined by proximate and ultimate analysis.

b) Moisture content; high moisture levels adversely affect equipment operation - clogging, storage and also system efficiency - gas quality is lower. Some moisture (as steam) may participate in char reactions, to useful effect [2.33].

c) Ash content; a low ash level is desirable due to a better energy balance, lower carbon loss due to occlusion and reduced reactor problems caused by sintering and slagging.

d) Volatile matter; released by pyrolysis, this joins gasification products or is thermally (or catalytically)

converted to further gaseous products. Part of the volatile matter comprises high molecular weight compounds ('tar') which are a major source of operational problems in gasification plant.

e) Particle size; should be small enough to enhance heat and mass transfer reactions, free flowing and with close size distribution. Fine particles can be a problem in some reactors due to 'dusting'. There is a requirement to optimise particle size in relation to shredder power consumption and reactor performance. Bridgwater has compiled a useful table relating particle size to reactor type [2.34].

2.5.6 Gasification medium

The two main gasification media are steam and oxygen. The oxygen can be either pure oxygen or mixed with nitrogen (either air or enriched air). Other gases, such as carbon dioxide (CO_2), carbon monoxide (CO) and methane (CH_4) can also participate in reactions (See Table 2.2). The main advantage of pure oxygen gasification is that product gases are not contaminated (or diluted) by nitrogen. For synthesis gas this is very important, as it affects the size of the downstream processing facilities, for example gas cleaning systems and catalytic converters. Oxygen supply cost is a significant factor for fuel gas applications.

The test plant under discussion was provided with a variety of alternative systems, to permit exploration of the effects of varying the gasification medium on product gas composition. The main options are shown in Table 2.4 below.

TABLE 2.4

Gasification media options

Pure oxygen
Superheated steam
Air (also oxygen enriched air)
Recycled product gas
Propane combustion products

The proposed utilization of these media is described in the planned experimental programme (Chapter 14.0).

2.5.7 Temperature

A rise in temperature enhances the intrinsic rate of all chemical and physical phenomena considered, but the various rates are accelerated to different extents so that the rate controlling mechanism may be altered, for example, from chemical reaction at low temperature (up to 900 C) to internal diffusion at intermediate temperatures and external diffusion at high temperatures (up to 1200 C). The quoted temperature domains depend on the particle size, the intrinsic rates of chemical reaction and internal diffusion, and the rate of external diffusion, which is correlated to the flow characteristics and various physical properties of the gas. The operating temperature also determines the equilibrium composition of the gas, as illustrated in Figures 2.5 and 2.6 and discussed below. In general, temperature is not truly an independent variable, since it is determined by:

- the quality of the fuel (moisture and ash content, calorific value)
- the extent of partial combustion, expressed by the air factor ´K´, i.e. the ratio of actual oxygen supply to that required for stoichiometric combustion, typical values of K range from 0.3 to 0.6.
- the heat losses from the reactor, i.e. the "radiation"

losses (actually convection + radiation) and the sensible heat of the product gas and ash.

2.5.8 Pressure

Pressure is a major variable. Pressure favourably influences the absolute rates of reaction, heat and mass transfer, and modifies the equilibrium relationships in favour of methane CH_4 as shown in Figure 2.1. Methane is an undesirable 'diluent' gas so far as methanol synthesis is concerned, in that it reduces overall yield and requires purging from the synthesis loop.

2.5.9 Reactor Type

There are numerous reactor types, all well documented. A particularly useful study was recently undertaken and reported by Beenackers and Swaaij [2.35]. The U.K. Department of Energy (E.T.S.U.) also commissioned a review report, which summarizes the commercial status of biomass gasifiers [2.36]. A number of these reactors, such as the promising oxygen donor process [2.37], would be considered unsuitable for pressurised operation at the present state of the art.

The reactors are normally categorized in relation to their gas flow, for example, updraft, downdraft, cross-flow or fluidized bed. It is not necessary to produce a list of systems, but rather to concentrate on those systems which offer the opportunity for pressurised operation. The principal pressurised gasification routes which have been researched are discussed further in section 2.6.

It is important to understand that each gasifier has a multitude of constraints related to its performance, in particular the feed characteristics, which have previously been discussed. In downdraft gasifiers, the intrinsic geometry results in the reactor operating at or above the ash fusion temperature of the biomass feed. This results

in unreliable performance. A similar phenomenom arises in fluidized beds, where temperatures in excess of 800 C are achieved. In this case, the bed particles will agglomerate and the author has personal experience of complete bed fusion. Table 2.5 summarizes some of the main advantages and disadvantages of some types of gasifiers (adapted from [2.38]).

TABLE 2.5

Comparative Reactor Characteristics

Advantages	Disadvantages
Counter-current Moving Bed	
Simple	High tar content in the gas
Low exit gas temperature	Channelling and bridging possible
	Lump or block feed only
Co-current Moving Bed	
Nearly no tar in product	High gas outlet temperature
Simple	Bridging possible
	Lump or block feed only
	Limited ash content of feed
	Difficult to scale up
Cross-current Moving Bed	
Simple	Char only or high tar level
Low capital cost	
Less sensitive to plugging	
Fluid Bed	
Can accept wide range of particle sizes	High outlet temperature
	Tars and fine particles in product gas
High ash fuels can be accepted	Difficult to control and operate
Good heat transfer	Bed agglomeration problems

2.6 Pressurised Gasification of Biomass

At the time the subject programme of work was initiated, (1979), a detailed survey was carried out to ascertain what information was available on the engineering design of biomass gasification plant. Very little was found. Most of the papers reviewed, dealt with the operational aspects of laboratory operations and small test plant. Some useful information emerged from an examination of parallel literature in the field of coal gasification, but this was not entirely appropriate, due to the different characteristics of the respective feeds [2.39]. This position has not altered significantly to date, despite major international programmes of research. Smith has produced a helpful summary paper related to gasifier design methodology [2.58]. It was not however directed to engineering design.

The main pressurised biomass gasification routes which have been studied are shown in Table 2.6 below. The particular gasifiers have been operated with a variety of gasification media and reactor conditions. Some, such as the Winkler (pressurised fluidized bed)), The Koppers Totzek(entrained bed, ash slagging) and the Texaco entrained bed (pressurised with a slurry feed), were developed for coal or peat gasification and were briefly used for biomass trials or economic studies, but are not considered to be technically or commercially viable for use with a biomass feedstock at this time. Table 2.6 below relates primarily to Biomass feed.

TABLE 2.6

Pressurised Gasification Routes

Process types	pressure (bar)	Processes	Source
Downdraft	10	SERI	[2.40]
Electrothermal	20	Novelerg	[2.41]
Cross flow	**30**	**Foster Wheeler**	**[2.42]**
Downdraft	**30**	**" " " "**	**[2.43]**
Fluid bed	30	Creusot-Loire	[2.44]
Fluid bed	30	MINO	[2.45]
Fluid bed	20	IGT	[2.46]
Entrained Bed*	50	Texaco	[2.47]
Catalytic	10	PNL	[2.48]
Catalytic	15-20	Wright Malta	[2.49]

* See also Crossflow + Entrained bed [2.50]

An interesting summary chart which identifies the relative levels of activity in the different systems is shown in Figure 2.7 [2.51]. It may be observed that the pressurised systems which appear to offer the most scope for research and development and design, are based on the use of oxygen/steam, although there is considerable involvement with the less complex atmospheric pressure oxygen/steam systems.

The recent results of the EEC Pilot Programme detailing the findings of the methanol production from wood studies, are particularly disappointing in respect of engineering design [2.52]. Aside from P & I drawings and brief comment on operational aspects, there is a singular lack of detail related to the actual engineering of any of the systems researched. This may be partially explained by the inherent commercial sensitivity. Figure 2.8 indicates the main characteristics of the selected CEC gasification projects [2.53]. Figure 2.9 summarizes the development items and status of these projects.

The notes, shown in Figure 2.9 [2.54], which suggest that processes such as the Creusot Loire fluidized bed or Lurgi circulating bed, have solved basic system design problems, such as feeding, bed agglomeration and so on, must be tempered, because the reported operational biomass experience relates essentially to atmospheric pressure trials. Only the Creusot Loire, MINO, SERI and IGT fluidized bed processes are positively projected for pressurised operation on biomass. Lurgi however, has high pressure coal gasification experience to draw upon and the circulating fluid bed has a very strong development potential.

Both the Creusot Loire and the MINO process, shown in Figure 2.10 and Figure 2.12 , operate with a secondary gasifier similiar to the POX reactor installed on the subject test plant to reduce tar and solids (char) 'carry-over'. With all fluidized bed gasifiers, the

'carry-over' of bed material, char and feed ash, demands careful design attention. It is doubtful whether dust removal based on the MINO bag filter approach shown in Figure 2.12, would prove to be successful, due to tar deposition and blinding. Fabric selection for long-term high temperature operation could also be a problem. It is understood that high temperature ceramic filters are being studied with some success.

Other routes noted in Table 2.6, such as Novelerg's moving bed and SERI's downdraft, shown in Figure 2.13, Figure 2.14 and Figure 2.15, are unlikely to be involved in large scale development (greater than 0.5-1.0 t/h). In the Novelerg system, the cost of electricity will impose a critical penalty. There are also major design problems to overcome in the ash removal system. A shaking grate was built into the test plant but never tested. Clinkering would almost certainly arise in this area. The SERI downdraft pressurised gasifier could be very difficult to scale up to large commercial units except by parallel reactor operation, because of feed handling and gas distribution problems. The author has patented a similiar downdraft design which is also not reliant upon throat geometry and which could be operated under pressure [2.55] (see also Appendix 2.5, which contains intellectual property and representative technical papers arising from the subject study).

2.6.1 Catalytic Gasification

Despite two main problem areas, catalytic stability and deactivation (poisoning), catalytic gasification is an attractive option in biomass systems for a number of reasons:

a) improved conversion; resulting in greater throughput
b) lower reaction temperatures; allowing more economic system design
c) enhanced tar cracking; permitting a simplified gas

cleaning system and higher reliability

d) tailored product gas; allowing optimization and process matching, for example, methanol synthesis or high methane content gas

Primary catalysts can be inexpensive alkali carbonates (perhaps derived from biomass ash). Secondary catalysts are used to modify product gas composition (often metallic compounds deposited on an inert substrate such as alumina {Al_2O_3}). The area of catalytic gasification is still relatively unexplored, particularly in pressurised systems. The work of Mudge, et al. has been very important in changing this position [2.56]. For further information on the role of biomass catalysts, the reader is referred to [2.57]. Table 2.7 below summarizes the status of pressurised catalytic steam gasification of biomass.

With regard to the Wright-Malta process, major problems were experienced in feeding biomass to the pressurised reactor whilst maintaining a gas-tight seal. The inlet feed valve was continuously 'scored' by abrasive inorganics in the feed, strongly suggesting its unsuitability. It is also doubtful whether the reactor design, which incorporates a single span screw, could be scaled up significantly, because of deflection problems on large spans (greater than 5-6 m). This point is discussed further in chapter 7.0.

TABLE 2.7

Catalytic Steam Gasification+

Company/ Institute	Pacific Northwest Laboratory	Wright-Malta Corp.
capacity (kg/h)	300*	125
pressure (bar)	10	15-20
reactor type	fluid bed	rotary kiln
heat transfer	indirect, through wall	indirect
catalyst	Ni-Co-Mo	soda ash

* estimated from [2.48]

\+ adapted from [2.34]

2.7 Concluding Comments

The previous discussion on the reported pressurised gasification developments, indicates that the published literature in the field of pressurised gasification of biomass is generally devoid of significant engineering detail. Whilst some problems are disclosed and given some limited comment the reporting is insufficient to assess the basis of the engineering judgments made in relation to design.

The use of simple thermodynamic equilibrium models can be very helpful, both in visualizing gasification process trends and also in structuring experimental programmes. With further development studies, supported by hard experimental data, the value of the models will be enhanced. It remains to be seen, whether such trends as invariant product gas composition at pressures above 10 bar g will be substantiated by experimental findings.

The most promising routes towards production of synthesis gas appear to be based on fluidized bed technology. The circulating fluidized bed concept being particularly interesting when viewed in the light of steam/oxygen gasification and a chemically active or catalytic bed.

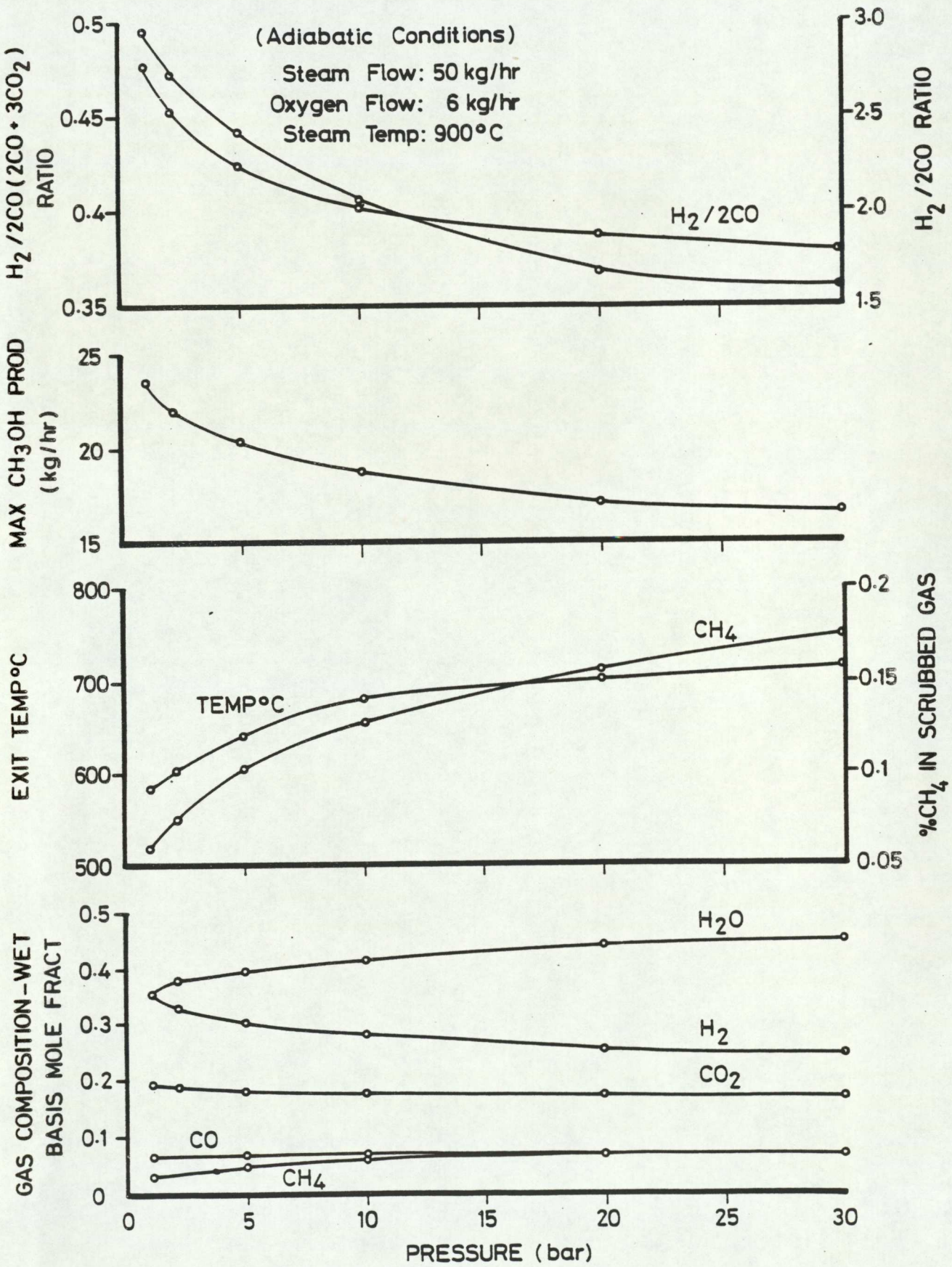

Figure 2.1 GASIFICATION WITH STEAM AND OXYGEN-EQUILIBRIUM, WITH NO SOLID CARBON

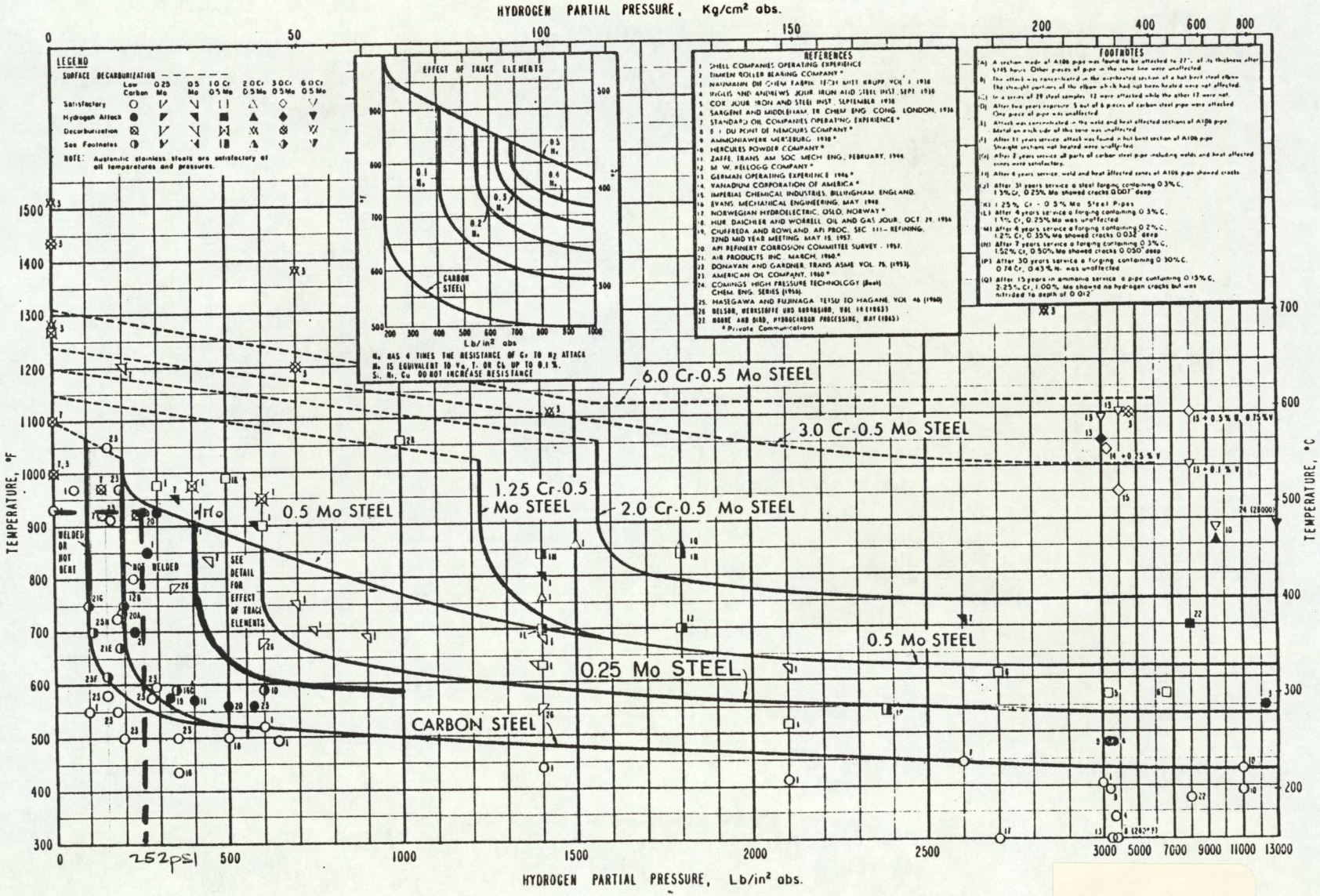

Figure 2.2 OPERATING LIMITS FOR STEELS IN HYDROGEN SERVICE [2.21]

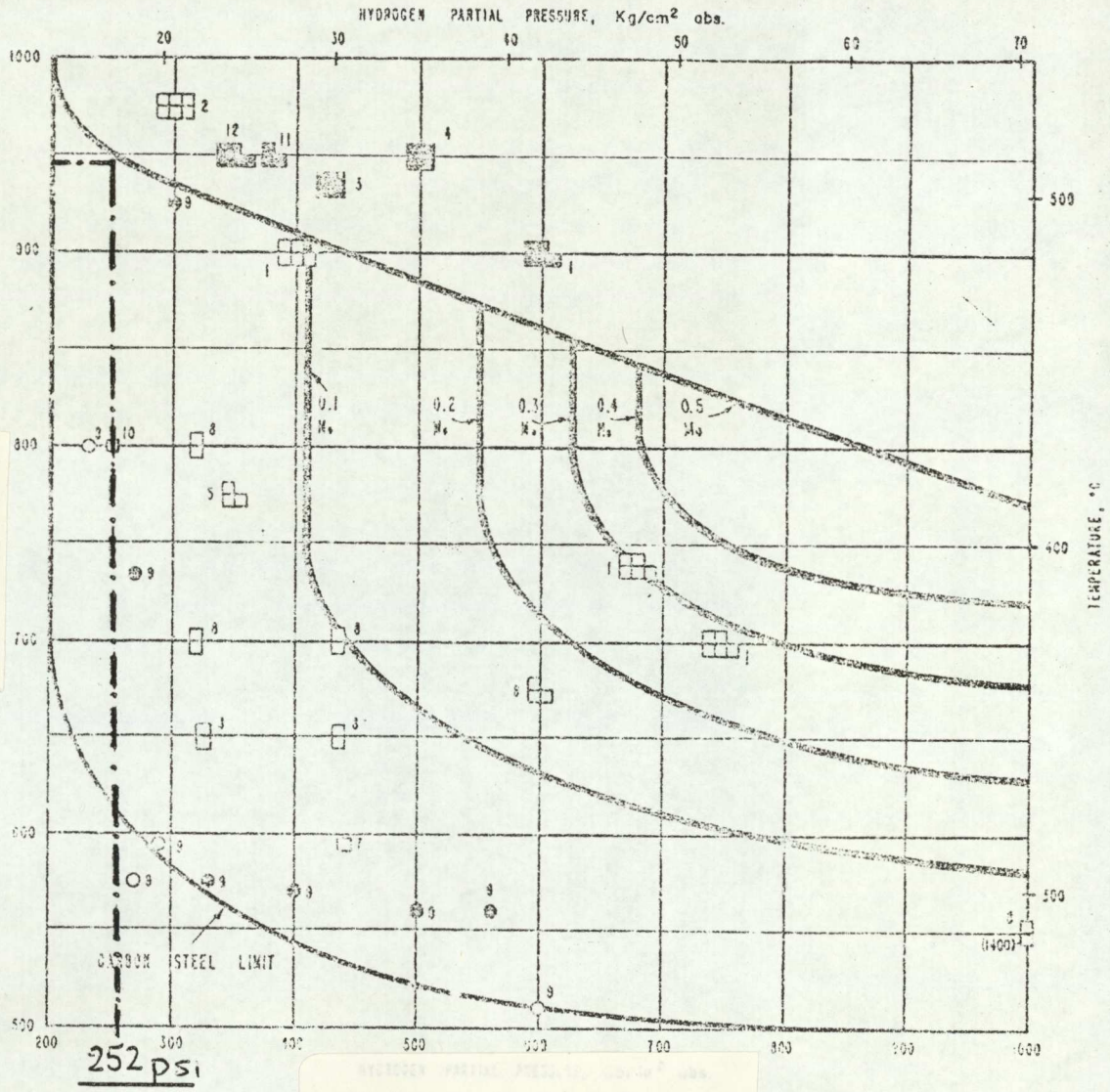

Fig. 2.2A operating limits for steels in hydrogen service [2.21]

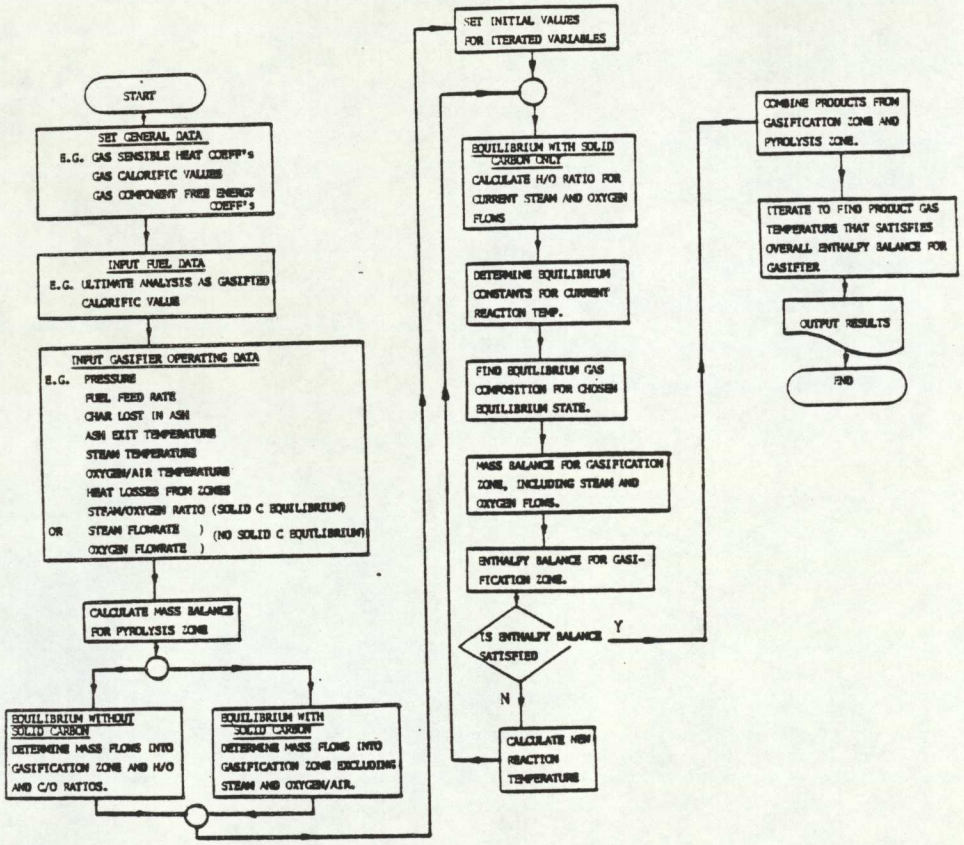

FIGURE 2.3 - Simplified flowchart for a general gasifier computer model.

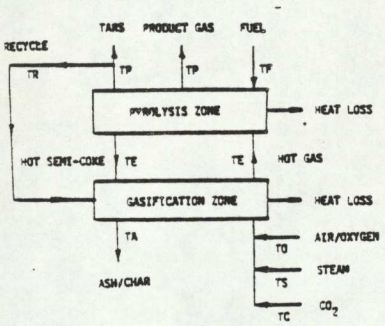

(Equilibrium type : usually solid carbon for slagging, no solid carbon for dry-bed)

FIGURE 2.4(a)

System diagram for fixed bed gasifiers.

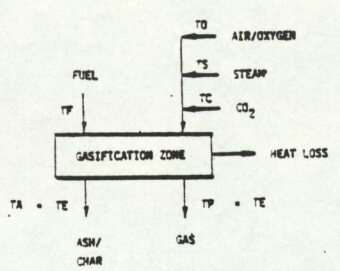

(Equilibrium type : usually no solid carbon for both)

FIGURE 2.4(b)

System diagram for entrained and fluidised bed gasifiers

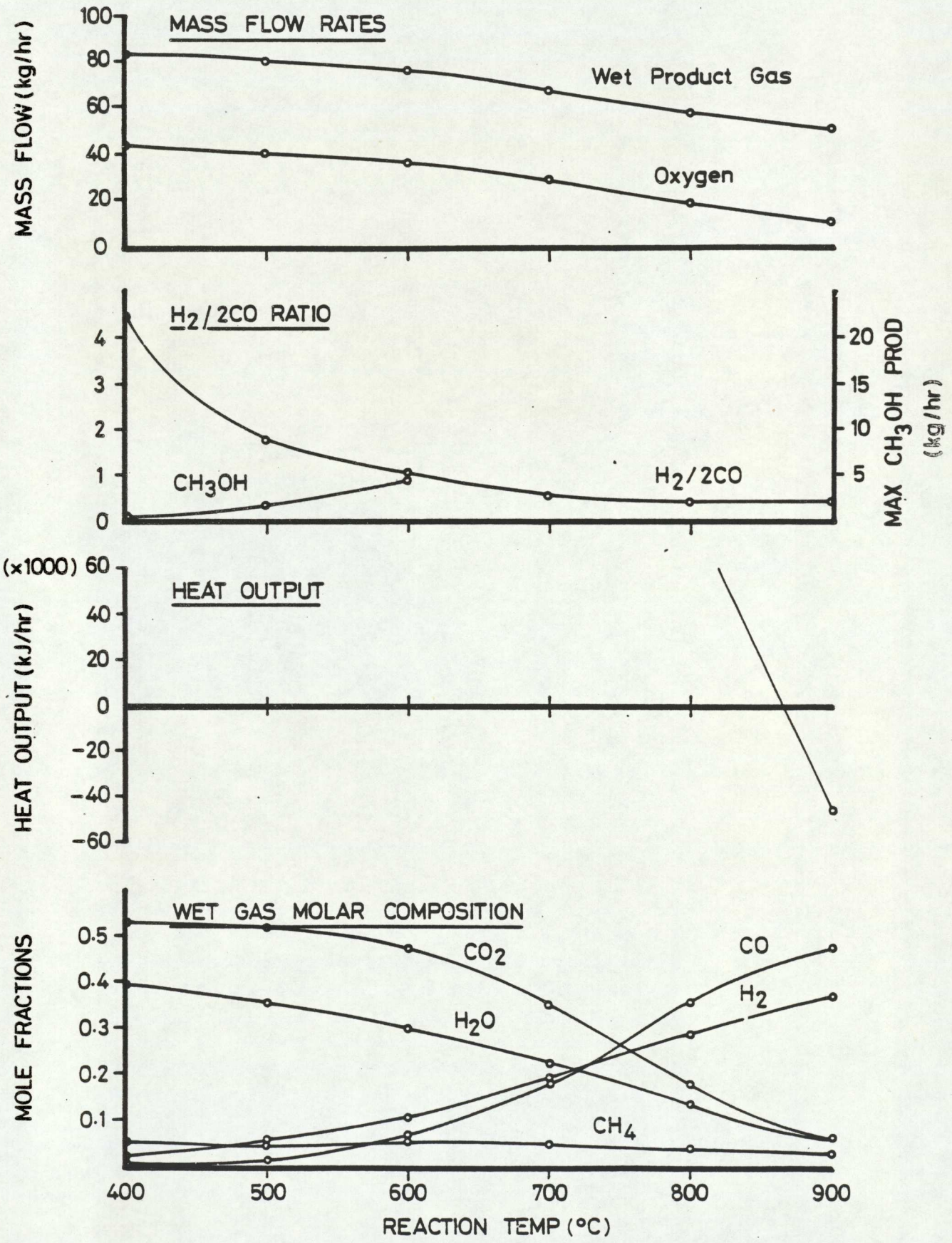

Figure 2.5 GASIFICATION WITH OXYGEN ONLY - EQUILIBRIUM WITH SOLID CARBON PRESSURE: 10 bars

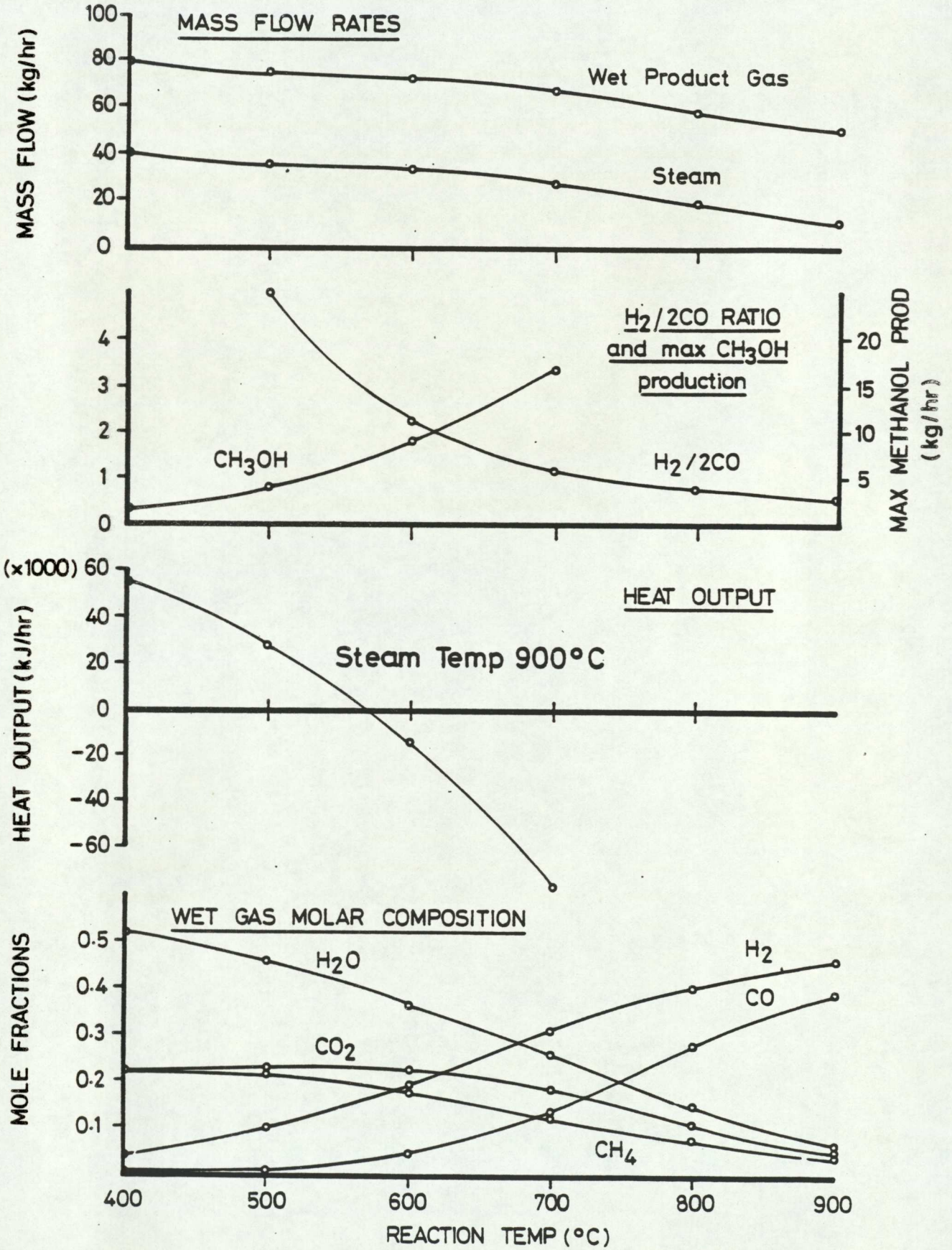

Figure 2.6 GASIFICATION WITH STEAM ONLY-EQUILIBRIUM WITH SOLID CARBON PRESSURE :. 10 bars

process conditions \ reactor type	co-current packed bed	counter-current packed bed	cross current packed bed	fluid bed	circulating fast bed	powder flame reactor	double fluid bed	exotic reactor types
1. Atmospheric air	±	±	-	±	±	±	///	±
2. Atmospheric steam (+air)(electricity)	±	-	-	///	-	-	\\\	-
3. Atmospheric oxygen/ steam	///	///	///	\\\	\\\	///	-	///
4. Pressurized air	-	-	-	-	-	-	±	-
5. Pressurized steam (+air)	-	-	-	-	-	-	±	-
6. Pressurized oxygen/ steam	///	///	///	///	±	///	-	±
	A	B	C	D	E	F	G	H

- no interest
± little interest and development
\\\ important research/dev. areas
/// EC supported projects

Figure 2.7 REACTOR TYPES AND PROCESS CONDITIONS FORGASIFICATION OF WOOD TO SYNTHESIS GAS [2.35]

Consortium or Company	pressure [bar]	design capacity [ton dry wood/h]	reactor type	gasification agent	duration testrun [hrs]	syngas methane + HC content [vol %]	proven actual capacity [ton dry wood/hr]	next step	oxygen and steam consumption [kg/kg dry wood]
Creusot Loire	1	0.320	fluid bed plus secondary empty tube gasifier	oxygen/steam for primary and secondary gasifier	24	0.6	0.350	2.5 t/h 15 bar Clamecy	O_2 : 0.57 H_2O: 0.08
Lurgi	1	0.320	circulating (fluid) bed gasifier	oxygen/steam	16	6.5	0.191	not yet announced	O_2 : 0.453 H_2O: 0.02
John Brown/Hellman	1	0.44	double fluid bed with chemically active solids	air	9.5	12.5	± 0.4 + 0.04 ton/h coal	not yet announced	only air
Italenergie/AGIP	1	0.5	primary fluid bed steam gasifier heated through wall plus secondary gasifier	steam for primary gasifier oxygen for secondary gasifier	0	*	0.25	not yet announced	only air **

* no accurate values available yet.

** secundary gasifier not yet in operation.

Figure 2.8 MAIN CHARACTERISTICS OF THE FOUR CEC SUPPORTED GASIFICATION PILOT PLANT PROJECTS [2.51]

Consortium or Company	Introduction of the feedstock	Melting;agglomeration of ash	Complete gasification	Solution for entrainment of ash and char	Avoiding expensive oxygen	Safe and effective separation between gasifier and combustor	Heat transfer between beds	Recovery of sensible heat product gas	Prospects of pressurization	Methanol grade gas production	Medium Joule Gas production
Creusot Loire	+	±P ±S	+	+	-	NA	NA	-	+	+	+
Lurgi	+	+	+	+	-	NA	NA	-	±	±	+
John Brown/Wellman	+	±	±	+ ±	±	+	+	±	-	-	+
Italenergie/AGIP	?		?		±		?	?	-	?	?

\+ solved/demonstrated
\- not solved/demonstrated
± not completely sure
? awaits future testing, only short duration runs available
NA not applicable to this process

Figure 2.9 SUMMARY OF DIFFERENT DEVELOPMENT ITEMS REALIZED IN THE CEC SUPPORTED GASIFICATION PILOT PLANT PROJECT [2.51]

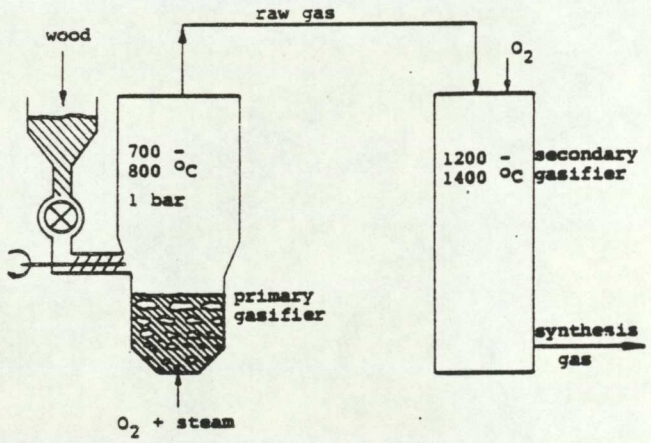

FIGURE 2.10 The Creusot Loire Process [2.35]

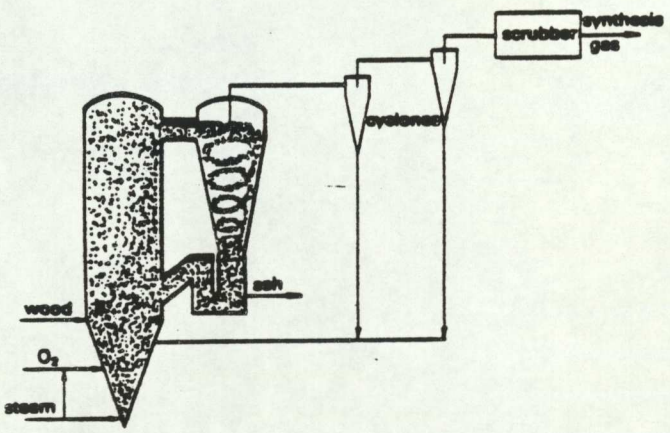

FIGURE 2.11 Lurgi's circulating fluidized bed gasifier [2.35]

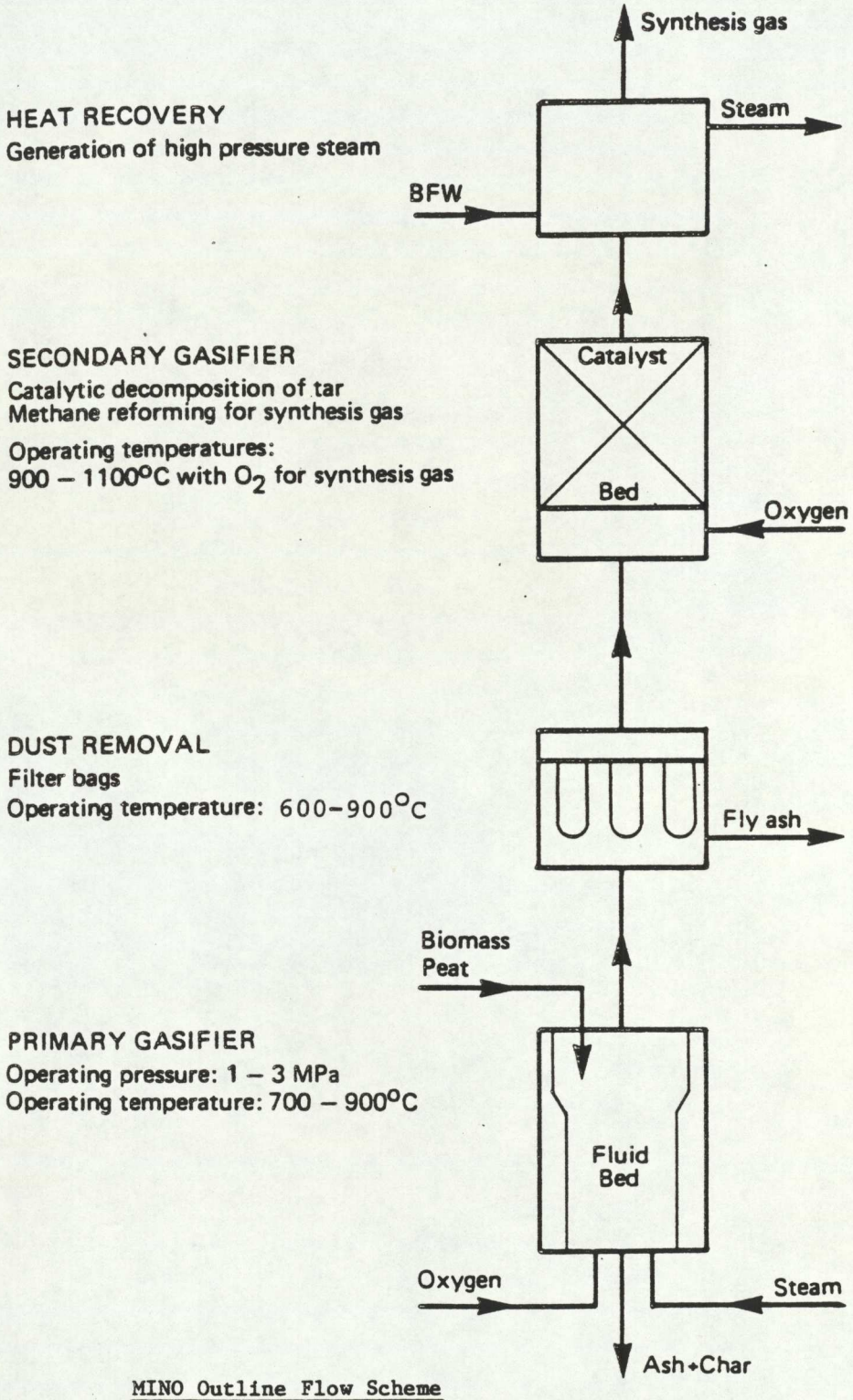

FIGURE 2.12 MINO OUTLINE FLOW SCHEME [2.35]

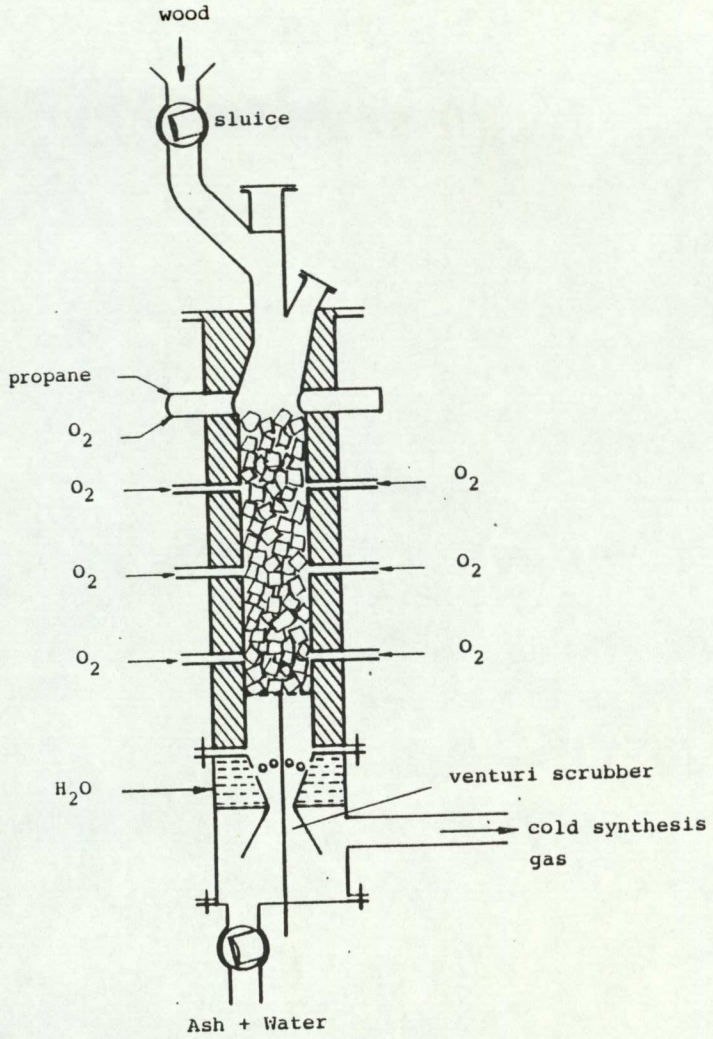

SERI's Down-draft Pressurised Gasifier for Oxygen-Wood Gasification

FIGURE 2.13 [2.35]

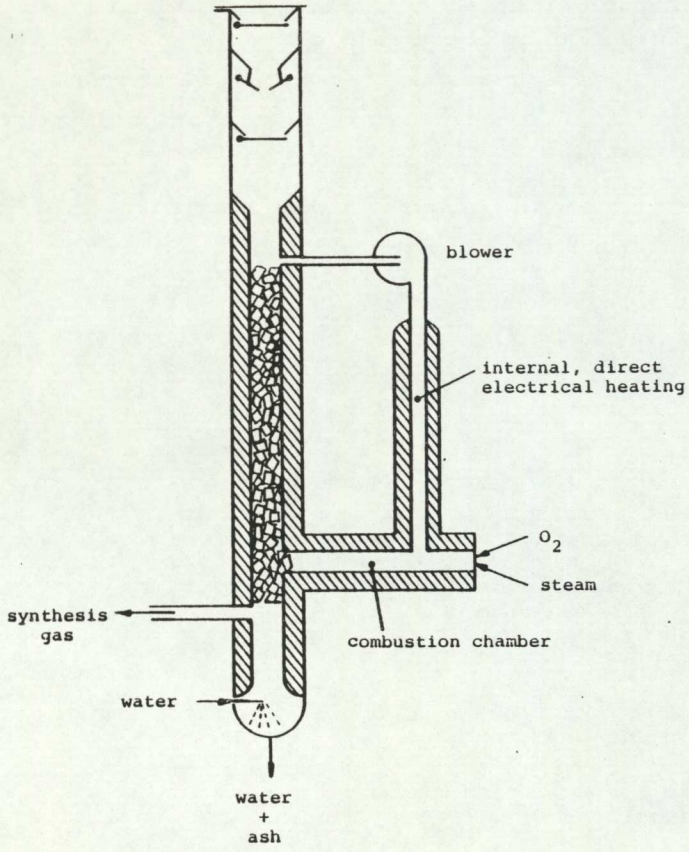

Novelerg's Moving Bed Gasifier

FIGURE 2.14 [2.35]

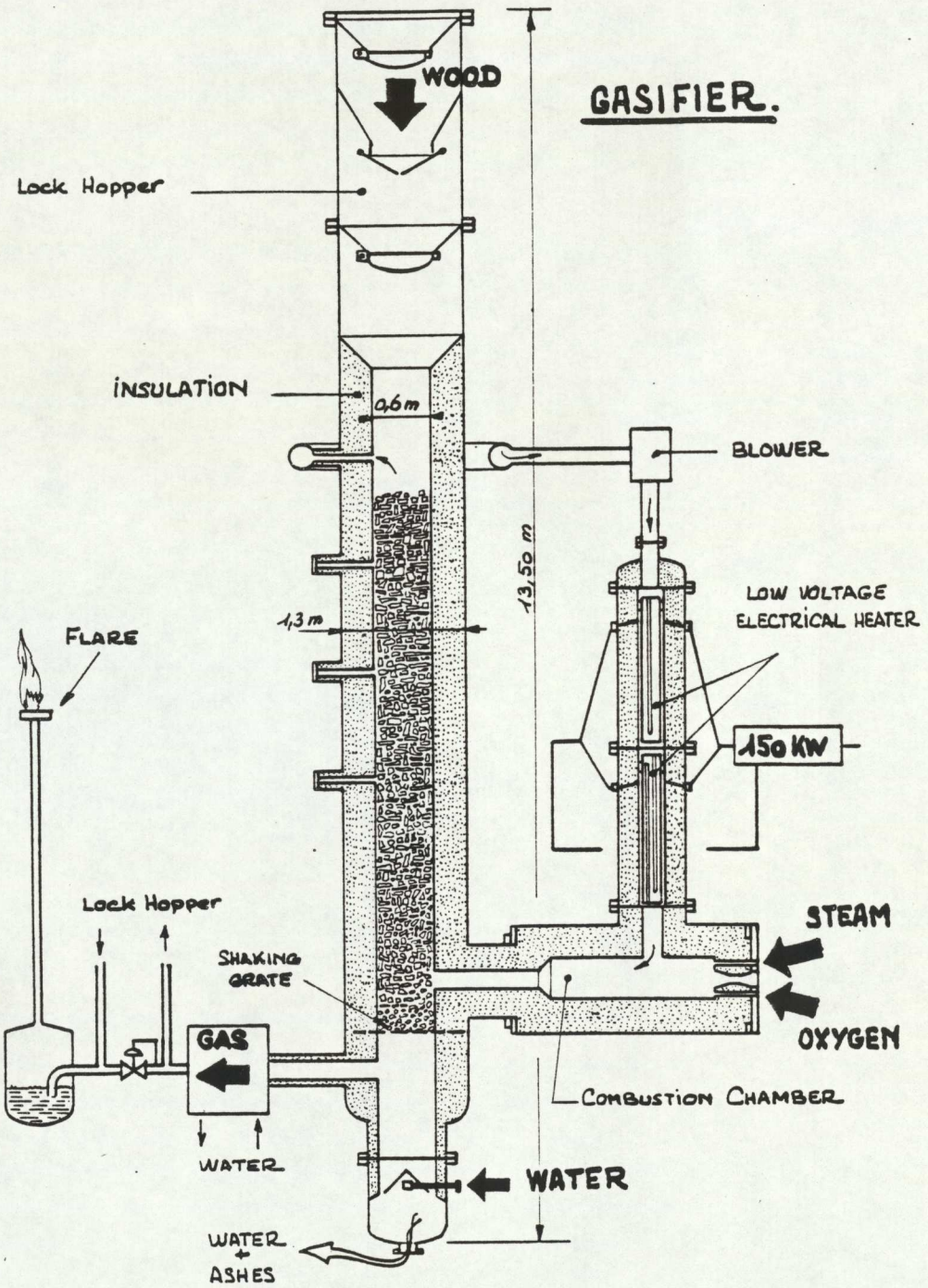

FIGURE 2.15 NOVELERG GASIFIER [2.35]

3.0 DESCRIPTION OF THE TEST FACILITY

3.1 Introduction

The project objectives were outlined in Chapter 1.0. They include the evaluation, design and construction of a versatile pressurised test facility, to study gasification of biomass under a wide range of conditions. Based on the 'state of art' literature review presented in chapter 2.0, a plant was designed and constructed for operation up to a maximum pressure of 3×10^6 N/m^2 g (30 bar g) at a maximum temperature of 1200 C.

The facility consists of a number of integrated and complementary units, which constitute the overall process depicted in Figure 3.1. The plant is described in terms of these units listed in Table 3.1 below, with reference to the chapter in which the detailed system designs are outlined.

Safety considerations are intrinsic to the plant design and are commented upon as they arise in each section; further details are presented in chapter 13.0.

TABLE 3.1

Principal System Units

Unit	Description	Reference
1	Solids Feed System	(chapter 4.0)
2	Main Gasification Reactor	(chapter 5.0)
3	Partial Oxidation Reactor	(chapter 6.0)
4	Ash Removal System	(chapter 7.0)
5	Gas Cleaning System	(chapter 8.0)
6	Furnace Vessel	(chapter 9.0)
7	Steam Superheater	(chapter 10.0)
8	Utilities	(chapter 11.0)
9	Instrumentation and Control	(section 12.0)

3.2 General Description

The central element of the test facility shown in Figure 3.2 and Figure 3.3 is the gasification reactor vessel with associated feed and ash removal systems. A steam generator and steam superheater arrangement is located on the upstream side of the gasification reactor. There is provision for an oxygen-propane or air-propane burner and separate oxygen injection, to provide flexibility in selecting the gasification parameters of temperature, reagents and flowrate. Steam, recycled product gas, combustion products and/or air/oxygen passes into a refractory lined combined furnace chamber/mixing vessel, prior to entering the selected gasification reactor.

A partial oxidation reactor (POX) sits downstream of the 'main' gasification reactor. This serves as a product transfer line when not being operated as a 'secondary' reactor. Gasifier reaction products (gases, tars and some entrained solids) can be further processed in the POX with air, oxygen or steam, prior to being cooled by addition of cold clean product recycle gas. The final combined gas stream is then directed into a high efficiency gas cleaning system. Cool clean product gas emerging from this system may be recirculated, to the POX reactor down stream of the main reactor, recycled to the furnace and/or diverted to a product gas flare.

3.3 Design Parameters

The principle design criteria which had a major influence in design specification were: design codes, pressure, temperature, feedrate and reagents. Also, as the product gases are both toxic (particularly the carbon monoxide) and highly flammable, special design attention was paid to ensuring safe leak-free operation. As discussed in chapter 2.0, the plant was designed and constructed generally in accordance with the requirements of the ASME VIII Div 1 pressure vessel code. Coded design is an

essential procedure for a plant which is to operate at high temperatures and pressures. It also satisfies both insurance and Health and Safety at Work demands.

The original design concept of the plant included operation at up to $3x10^6$ N/M^2 g. All principal components in the facility were, therefore, either designed or selected to be capable of withstanding the maximum operating pressure that they would experience ($3x10^6$ N/M^2 g operating and $3.2x10^6$ N/M^2 g design). Following evaluation of feed valve suitability and availability (discussed in chapter 4.0), it was decided that the experimental work would proceed in two phases, dictated in part, by availability of suitable feed valves: Phase I would run with pressures up to a maximum of $1x10^6$ N/M^2 g and phase II with a maximum pressure of $3x10^6$ N/M^2 g.

Temperature considerations were important in the selection of suitable materials of construction for both vessels and pipework because stress-temperature characteristics had to be compatible with the selected design codes. Potential stress corrosion and hydrogen embrittlement problems were also examined.

To limit pipe sizes/weights and minimize tar/char (pyrolysis products) laydown in pipes and nozzles, product gas pipe sizes were calculated and selected on a 'reduced diameter' basis. That is, the design 'normal' gas velocity in pipes of 15 m/s was increased to 45 m/s. At atmospheric pressure, this increase in velocity would result in greater pressure losses, increased noise level and in long term operation, potential problems with erosion (solids impingement). At the elevated pressures proposed for plant operation, gas velocities would however be low, due to compression, therefore these problems would not arise. This reduction in velocities is shown in the flowrate summary given in Table 3.2 below, with reference to Figure 3.4, the schematic pipeline designation.

ASTON UNIVERSITY LIBRARY

TABLE 3.2 FLOWRATES AT NOMINAL MAX. TEMP. AND PRESSURE OF 1.013 BAR * M^3/h

LINE No.	Name	MOLAR FLOW kmol/h Min.	Max.	Normal	VOLUME FLOW m^3/s Min.	Max.	Normal	Pressures in Bar a FOR PIPELINE VEL.15 m/s CSA.m^2	Dia.mm.	NOM. MAX. TEMP. C
G1	Propane Feed	0.14	0.46	0.14	0.42*	13.94*	4.17*	2.6×10^{-4}	18.2	100
G2	Oxygen to propane burner	0.061	1.59	0.61						
G2a	Oxygen to re-cycle burner	-	1.59	0.70						
G3										
G4	Hot product from furnace	11.0	19.3		0.37	0.65		0.043	235	1200
G5	Product gas from gasifier	13.8	22.1		0.34	0.54		0.036	214	800
G6	Reduced flow after hot gas recycle		13.8			0.34		0.023	169	800
G7	Diluted gas entering scrubber	11.0	25.5	24.1	0.20	0.45	0.42	0.030	195	500
G8	Cooled gas to fan and export	11.0	25.5		0.12	0.28		0.018	153	200
G9	Export of gas	2.8	7.7		0.02	0.08		5.54×10^{-3}	84	200
G10	Fan duty discharge	2.8	21.4		0.03	0.23		0.15	140	200

TABLE 3.2 FLOWRATES AT NOMINAL MAX. TEMP. AND PRESSURE OF 1.013 BAR (Contd.)

Pressures in Bar a

LINE No.	Name	MOLAR FLOW kmol/h Min.	Max.	Normal	VOLUME FLOW m^3/sec Min.	Max.	Normal	FOR PIPELINE VEL.15 m/s CSA.m^2	Dia.mm.	NOM. MAX. TEMP. C
G11	Fan bypass	0	21.4		0	0.23		.015	140	200
G12	Scrubber Dilution Recycle	9.2	11.7	10.3	0.10	0.13	0.11	8.41×10^{-3}	104	200
G13	Recycle to furnace	11.0	19.3		0.12	0.21		0.014	133	200
G14	Cold Dilution recycle		19.3			0.21		0.014	133	200
G15	Recycled fuel	0	6.9			0.07		5×10^{-3}	79	200
G16	Hot Dilution	0	9.7			0.24		0.016	142	800
G17	Mixed Dilution recycle to furnace	11.0	19.3		0.27	0.47		0.03	200	800

FLOW RATES AT NOMINAL MAX. TEMPERATURE AND PRESSURE

REDUCED DESIGN DIAMETERS

Pressures in Bar a

LINE No.	Name	Max Mol Flow kmol/hr	Vol. Flow m^3/s @ Max. T @ 1 Bar a	Max. Temp. C	Pipe dia. mm @ 1.013 Bar 15 m/s	Reduced D @ Pressure mm	New Vel. @ 1.0131 bar m/s	Pressure for 15 m/s
G1	Propane Feed	0.46	0.42*	100	18.2	12.7 ($\frac{1}{2}$")	30.8	2.08
G2	Oxygen to Propane Burner	1.60						
G2a	Oxygen to Recycle Burner	1.60						
G3								
G4	Hot Product from Furnace	19.30	0.65	1200	235.0	153 (6")	35.4	2.39
G5	Product Gas from Gasifier	22.10	0.54	800	214.0	153 (6")	29.4	1.98
G6	Reduced Flow after Hot Gas Recycle	13.80	0.34	800	169.0	153 (6")	18.3	1.24
G7	Diluted Gas Entering Scrubber	25.50	0.45	500	195.0	153 (6")	24.4	1.65
G8	Cooled Gas to Fan and Export	25.50	0.28 * m^3/h	200	153.0	102 (4")	33.8	2.28

FLOW RATES AT NOMINAL MAX. TEMPERATURE AND PRESSURE (Contd)

REDUCED DESIGN DIAMETERS

Pressures in Bar a

LINE No.	Name	Max Mol Flow kmol/hr	Vol. Flow m^3/s @ Max T @ 1 Bar a	Max. Temp. C	Pipe Dia. mm @ 1.013 Bar 15 m/s	Reduced D @ Pressure mm	New Vel. @ 1.0131 bar m/s	Pressure for 15 m/s
G9	Export of gas	7.7	0.083	200	84.0	-	-	-
G10	Fan Duty Discharge	21.4	0.23	200	140.0	102 (4")	30.6	2.07
G11	Fan Bypass	21.4	0.23	200	140.0	102 (4")	30.6	2.07
G12	Scrubber Dilution Recycle	11.7	0.13	200	104.0	102 (4")	15.6	1.05
G13	Recycle to Furnace	19.3	0.21	200	133.0	102 (4")	25.5	1.72
G14	Cold Dilution Recycle	19.3	0.21	200	133.0	102 (4")	25.5	1.72
G15	Recycled Fuel	6.9	0.07	200	79.0	51 (2")	36.0	2.43
G16	Hot Dilution	9.7	0.24	800	142.0	102 (4")	29.1	1.96
G17	Mixed Dilution Recycle to Furnace	19.3	0.47	800	200.0	153 (6")	25.6	1.73

3.4 Feed

Feedrate capacity of the plant, was chosen on a balance between space restrictions (pilot scale operation), cost, and a minimum throughput rate for satisfactory results. Previous experience on a Cross-Flow Pyrolyser was also taken into account. High feed throughput is expensive both in terms of feedstock cost (including transportation) and handling costs because movement of large quantities of low bulk density feed demands sophisticated equipment. Pine 'Hacker Chip' was selected as the design feed, on the basis of its quoted particle size of 2-4cms which in turn was dictated by the specified feed valve dimensions and reactor size. Material handling difficulties (storage and transportation) and local feed availability were also factors considered.

The feed system to the rig is shown in Figures 3.5 and Figure 3.6. It comprises a funicular hoist and bucket arrangement which was choosen because of its simple compact nature. The feed hoist bucket delivers pre-weighed batches of feed to an upper hopper, located on a triple valve stack which sits on the main reactor inlet flange. A design maximum feed rate of 100 kg/h Hacker chip was selected on the basis of limited experimental trials using a full size model of the proposed valve arrangement and review of options.

3.5 Main Reactor

The gasification reactor vessel, shown in Figure 3.3 and figure 3.5, is a specially designed multi-purpose unit which can operate in a number of different modes, depending on the specified internal refractory configuration and gasification medium. A typical example, based on a downdraft configuration, is shown schematically in Figure 3.7. The reactor was constructed in two half sections to:

a) facilitate refractory installation
b) permit refractory alterations and/or replacement
c) permit full replacement of a half section for a new vessel configuration for example, by insertion of an additional section.

The main gasification vessel comprises two shells connected together on the largest diameter by stud bolts on the flanges. There are four major penetrations into the vessel: gas inlet/outlet, and feed inlet/outlet. During gasification, part of the feed is converted to gas leaving a small residue of char and ash, which is discharged in the ash removal system. The product gases and organic condensates exit downstream from the reactor in addition to any unconverted gasifying medium.

The overall dimensions of the main reactor are given in Figure 3.7 which shows two reactor types. The first (un-hatched) arrangement is a cross flow configuration, in which feed passes vertically in plug flow through the reactor whilst being intimately contacted with the hot gasifying medium which flows horizontally through the plug, sweeping away the reaction products. The hatched reactor shown in the same figure, results from a proposed modification to the internal refractory structure. This permits the main reactor to operate in a downdraft mode. In this case, the hot gasifying medium enters the reactor horizontally to the feed flow (plug feed) and then travels down through the reactor with the feed material. In the latter reactor arrangement there is provision for direct oxygen injection into the feed reactor shaft. As with the crossflow configuration, solid residue is removed from the bottom of the reactor and any reaction products, along with unreacted gasifying medium, are internally ducted from the reactor via the POX reactor to the gas cleaning system. Further details of the cross-flow and downdraft reactors are given in Patent documents included in Appendix 2.5. There are a large number of possible alternative configurations for the test reactor, depending

on the selected refractory configuration and inbuilt system flexibility. These include, updraft and fluidised bed operations [3.1].

The reactor vessel operates with a maximum shell temperature of 300 C and a design maximum shell temperature of 350 C. The selected material of construction and refractory thickness sets maximum temperatures. The outer shell is clad in an insulating mineral wool blanket (Kaowool) to reduce the external surface temperature to less than 70 C to minimise heat loss and for personnel protection.

3.6 Partial Oxidation Reactor

A partial oxidation reactor (POX), is sited immediatley downstream of the main gasifier vessel, linking the product gas discharge outlet to a high efficiency venturi scrubber. The completed POX unit, awaiting installation, is shown in Figure 3.8. It is essentially a flanged steel tube internally lined with refractory, with provision for oxygen, steam or air injection through a monolithic zirconia quarl (shaped refractory block). The quarl contains a series of hollow gas injection needles which pass back into an intrinsic common distributor (discussed in chapter 6.0). This design permits controlled direct addition of, for example oxygen, to the reactor products entering the POX.

Products exiting downstream from the main reactor flow through the quarl throat where the chosen reaction medium enters. In the case where pure oxygen or air is being employed, the organic material and gases from the reactor would be further oxidised. Downstream of the quarl, there is a connecting pipeline for returning part of the cleaned product exiting from a gas scrubber unit to the POX, in order to moderate the product gas temperature into the scrubber. This ´recycle´ provision simplified scrubber inlet nozzle design by reducing the temperature of the

inlet gas to the scrubber.

3.7 Ash Removal

Ash and residue (unreacted feed plus free carbon) is extracted from the base of the main reactor by means of the manually operated water cooled screw shown in Figure 3.9. Due to the very low ash content of wood (generally less than 0.5% wt), it was not considered necessary to operate a continuous ash extraction system for the 'short term' runs planned of up to 24h max. Provision was made to fully automate ash removal, should the outcome of the experimental work justify such a system.

The screw operates on a batch basis, with ash being transferred out of the reactor by manually operating the screw and dropping the ash level in the system. Initially, on plant start-up, the reacting feed would be supported on a bed of inert material (molochite). During operation of the reactor, ash is progressively displaced from the reaction zone and over a period the ash eventually exits the reactor into the screw. The displaced material is collected in a double valved 'spool' bolted to the discharge end of the screw.

The ash removal screw is surrounded by a water jacket to cool the ash and maintain low metal temperatures. As the screw inlet flange is bolted directly onto the reactor exit flange, it was necessary to support the unit by spring hangers to carry the load of the feed screw, whilst allowing for the thermal expansion of the reactor vessel during operation.

3.8 Furnace Vessel

The furnace vessel, is bolted directly to the gas inlet flange on the main reactor vessel as shown in Figure 3.10 and Figure 5.7. This unit comprises a single refractory lined chamber with a number of flanged penetrations.

The selected burner, located on the back flange can run on propane (or similiar flammable gas) fired with either oxygen or air. Two different burners were manufactured to accomodate the different combustion product gas volumes involved (air or oxygen).

The burner system can be bypassed to permit direct injection of pure oxygen or oxygen enriched air to the main reactor. The back flange on the furnace vessel also supports an ignitor, flame ionisation detector and thermocouple probe. At low pressures (up to $5x10^5$ N/M^2 g), the burner flame can be viewed directly through a sight glass. For safety reasons, this would be sealed off and isolated during high pressure operations (glass could crack). The furnace vessel serves in a duel role in that, it also acts as a mixing chamber for recycled product gas and/or steam passed to it from either a works supply or the steam superheater.

3.9 Utilities and Services

The test rig was located inside the main R and D workshop and was served by the usual 'domestic' services, washroom, messroom and so on. Additional provisions included:

a) High pressure saturated steam
b) Low pressure saturated steam
c) Propane gas
d) Oxygen
e) Inert gas
f) Electrical power
g) Water
h) Compressed air
i) Waste water drain
i) Crane

3.10 Instrumentation and Control

Instrumentation and electrical systems support three

primary functions:

a) system control (logic operations, level switching, valves, solenoids)
b) process monitoring (such as temperatures, flowrates, gas analysis, pressure)
c) unit operation (switch gear to pumps, fans motors)

The plant was extensively instrumented in order to maximise data recovery from the planned experiments. System operation is managed in a local control room housing switch gear and instrument cubicles. Temperatures, pressures and flowrates are measured and recorded in all main lines either by chart recorder or data logger. Surface thermocouples welded to the vessel shells and nozzles, monitor system thermal integrity by detecting critical temperatures. These readings are continuously recorded and analysed by a dedicated Apple IIe microcomputer programmed to create audible and visual alarms and automatic plant shutdown if necessary.

During plant operation, product gas composition is continuously analysed using a combination of an infra-red technique, for carbon monoxide (CO), carbon dioxide (CO_2), and methane (CH_4), thermal conductivity measurement for hydrogen (H_2) and a paramagnetic technique for oxygen (O_2). These analytical procedures are backed up and extended by gas chromatography.

The main reactor feeding process is almost entirely automatic, being controlled by a pre-determined 'hard wired' logic switching sequence. This sequence is initiated by the operator depressing a single button on receipt of a feed hopper 'low' signal, generated by a gamma switch located on the reactor inlet neck as shown in Figure 3.11.

The above points complete the introductory description of the subject test plant. This is shown in its latest state

in Figure 3.12. In the following chapters, a more detailed examination will be undertaken of the options and selection procedures, which resulted in the present plant design.

3.11 Summary of Flowsheet and Mass Balance

As a guide to the overall arrangement and typical flows through the system, a summary mass balance and flowsheet is given in Figure 3.14. This provides typical mass flows and composition through the pilot plant for the 10 bar case based, in part, on the equilibrium calculations described in Appendix 2.5 and exemplified in Appendix 2.4.

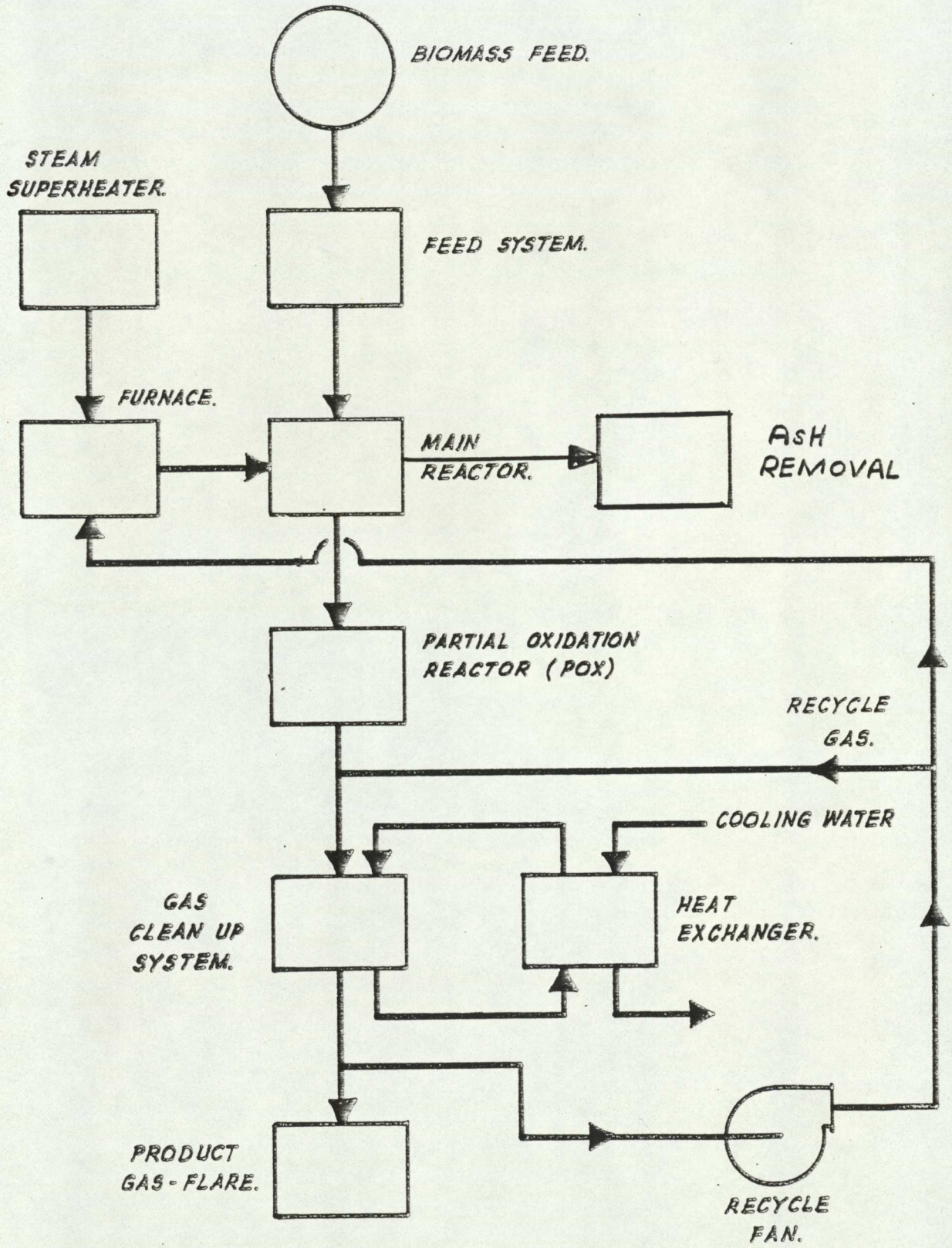

FIG. 3.1 - PROCESS SCHEMATIC.

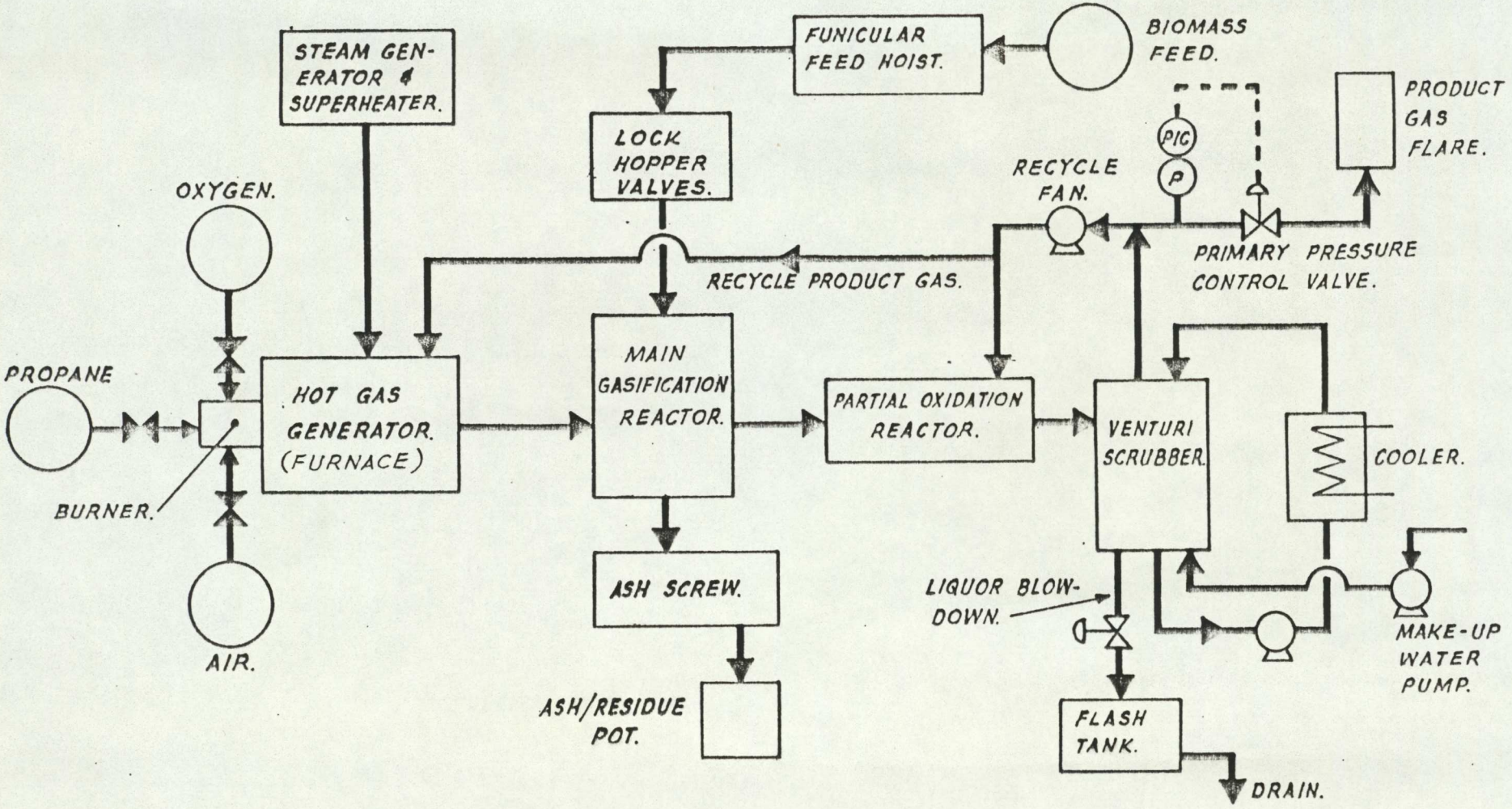

FIG. 3.2 - TEST PLANT.

Figure 3.3 Biomass Gasification Test Rig

General Arrangement

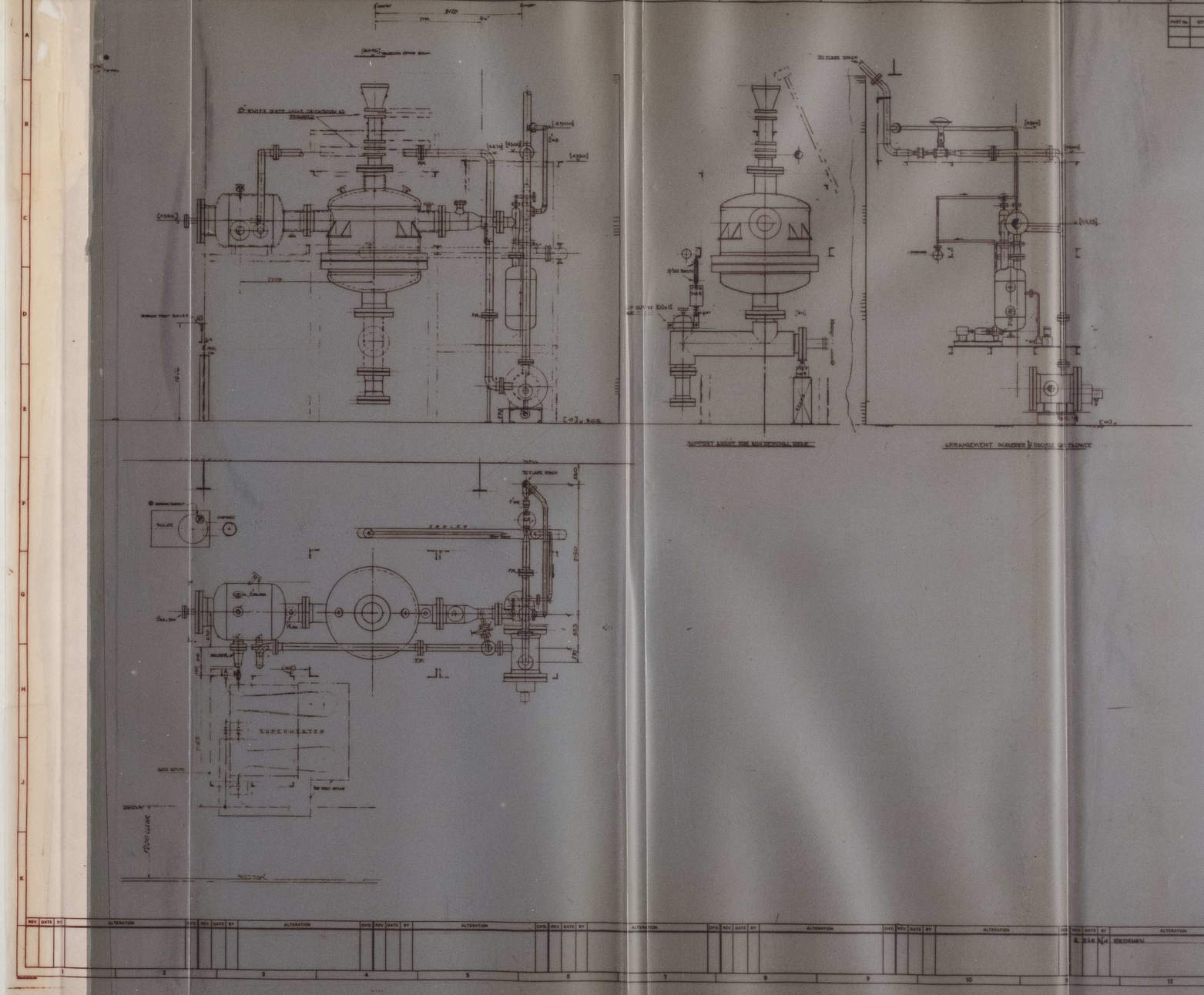

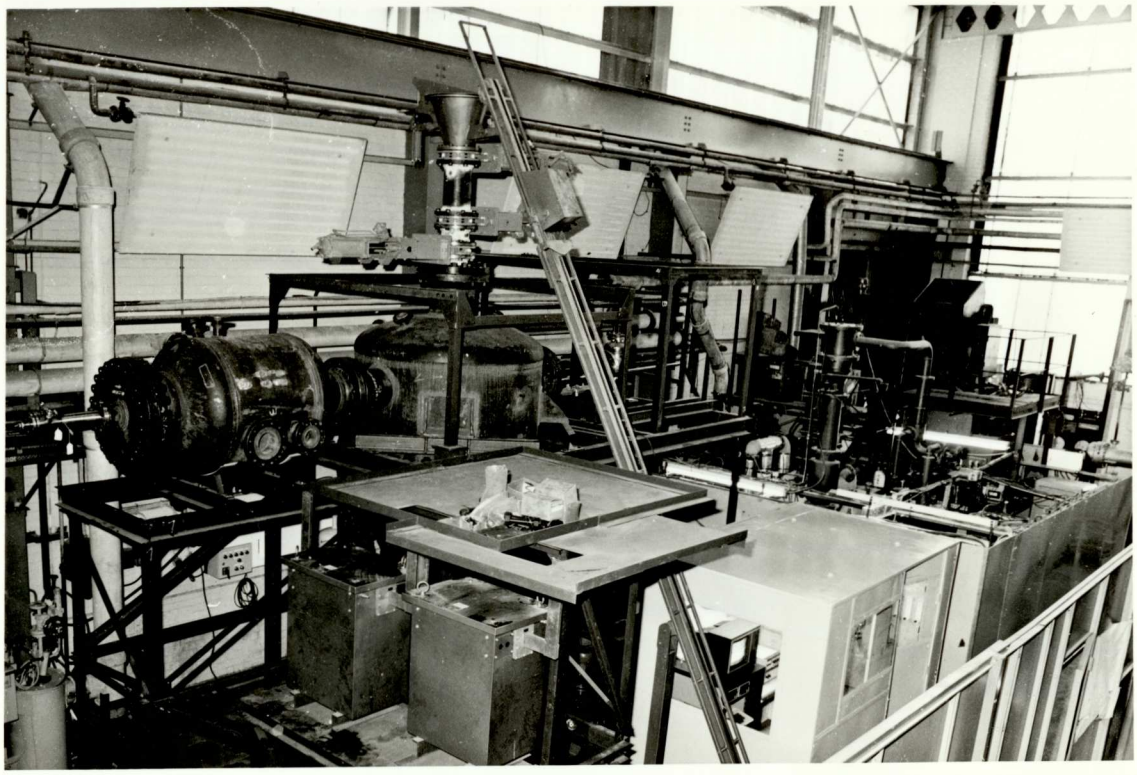

Figure 3.5. View of test plant showing furnace, reactor and feeder.

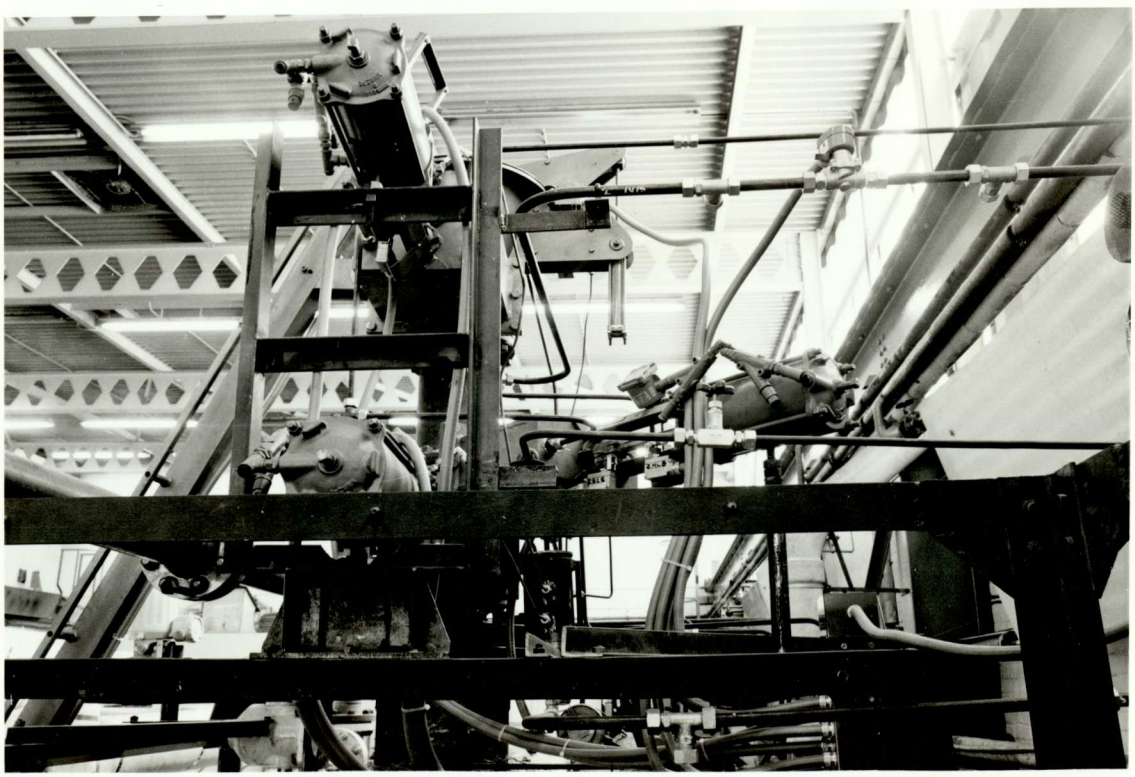

Figure 3.6. View of feed inlet valve assembly.

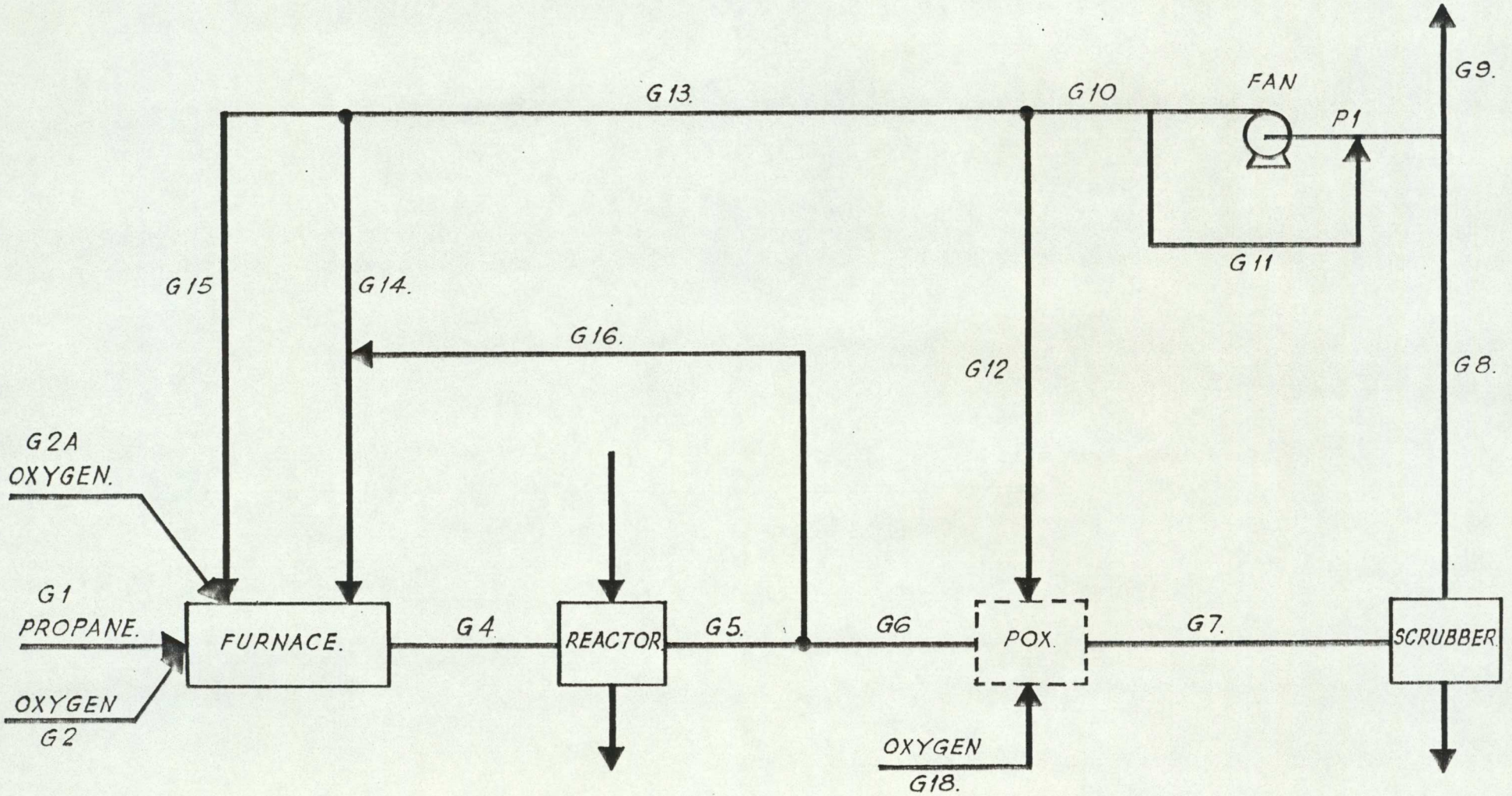

FIG. 3.4 - LINE DESIGNATION DIAGRAM.

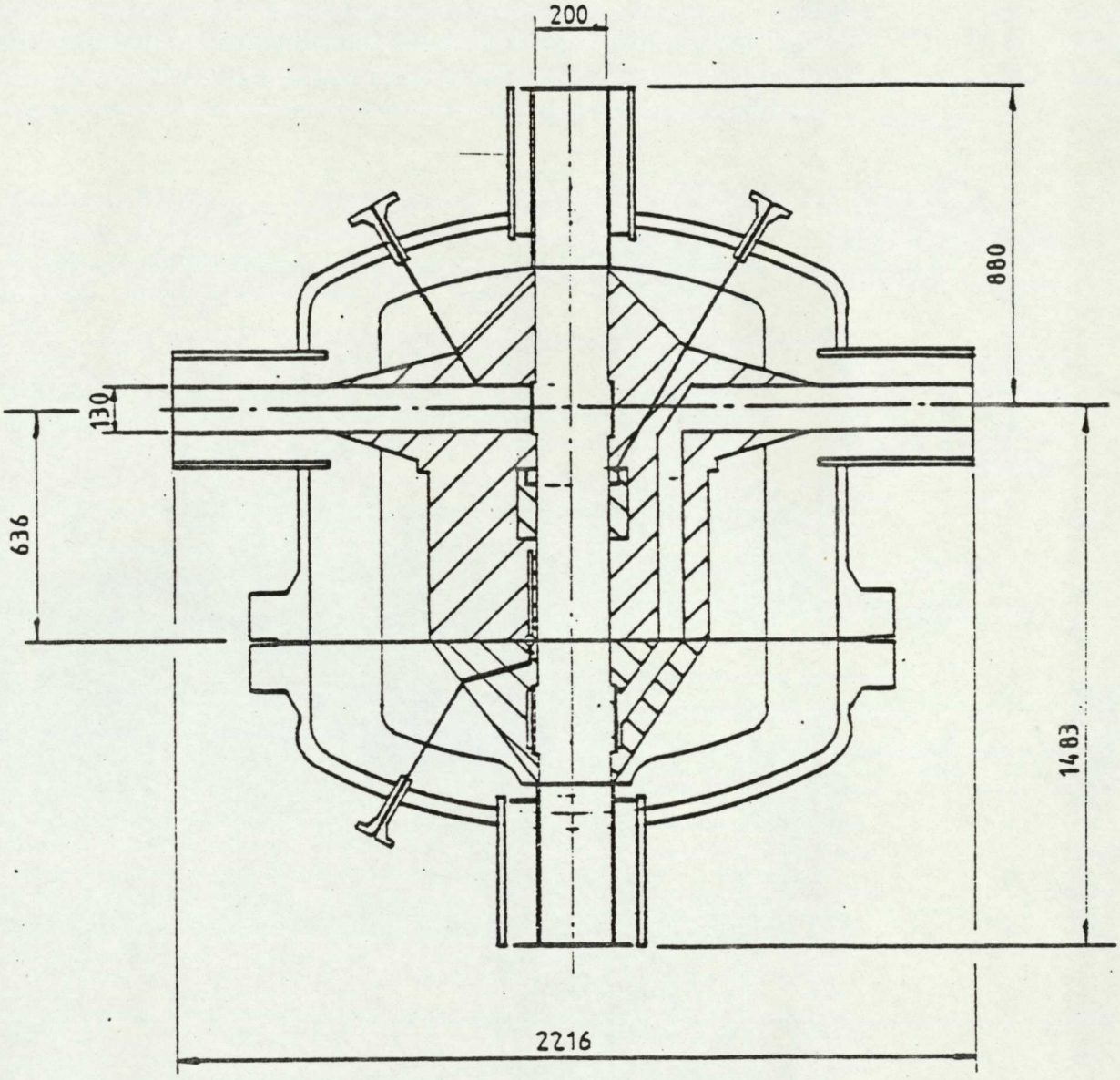

FIGURE 3.7 - DOWN DRAFT REACTOR

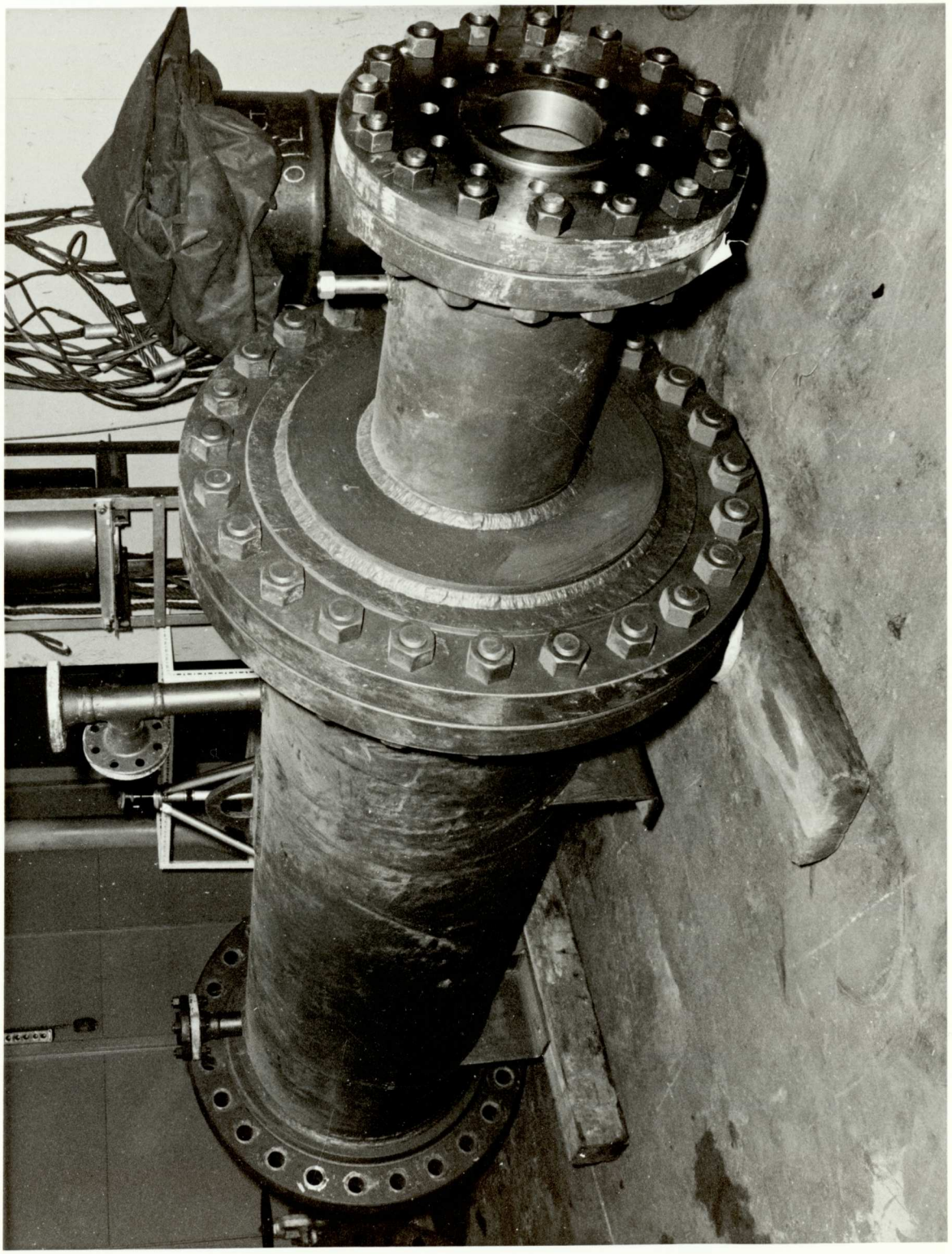

Figure 3.8. Partial oxidation reactor awaiting installation.

Figure 3.9 Char/Ash Removal System Arrangement for Biomass Gasification Test Rig

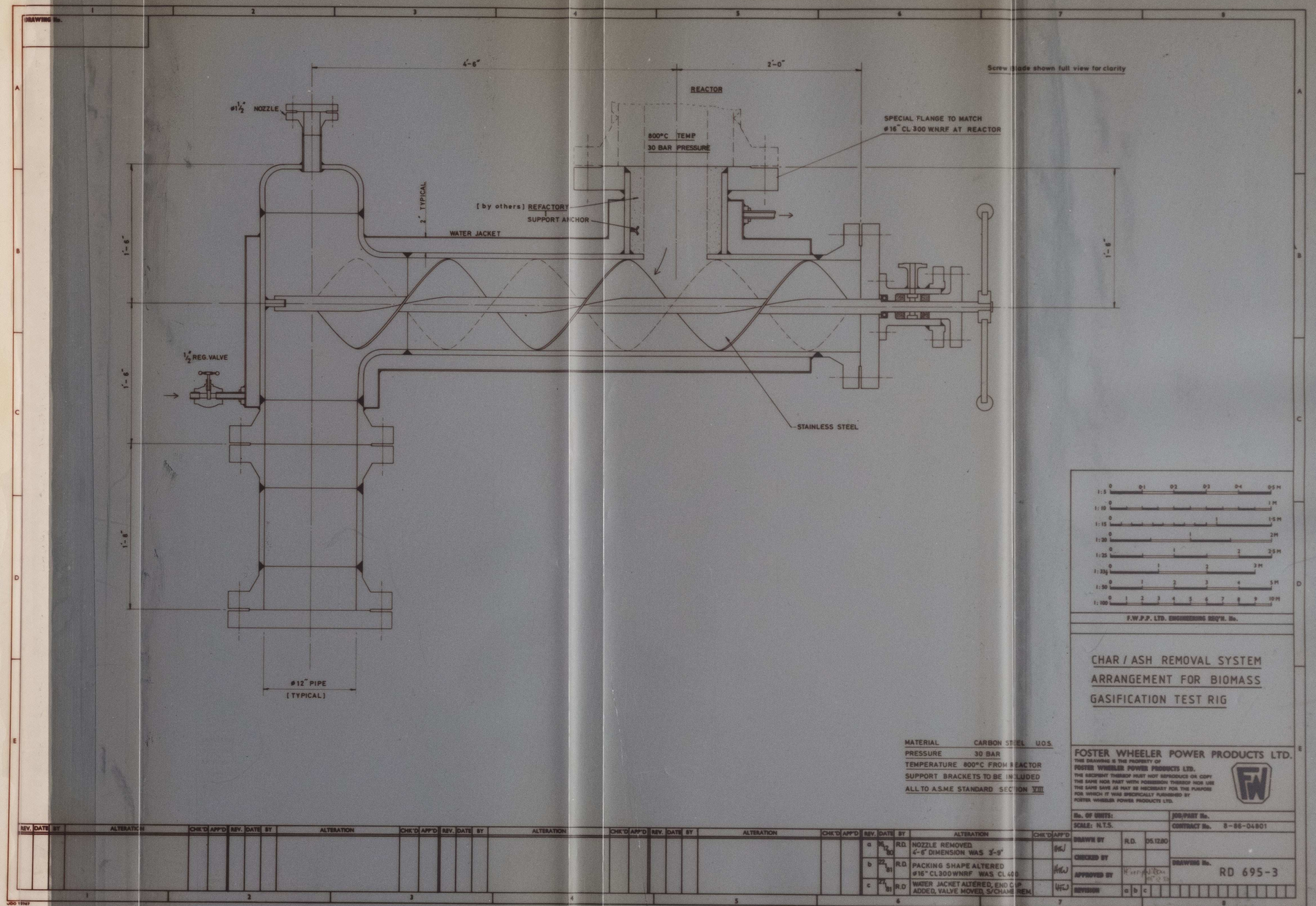

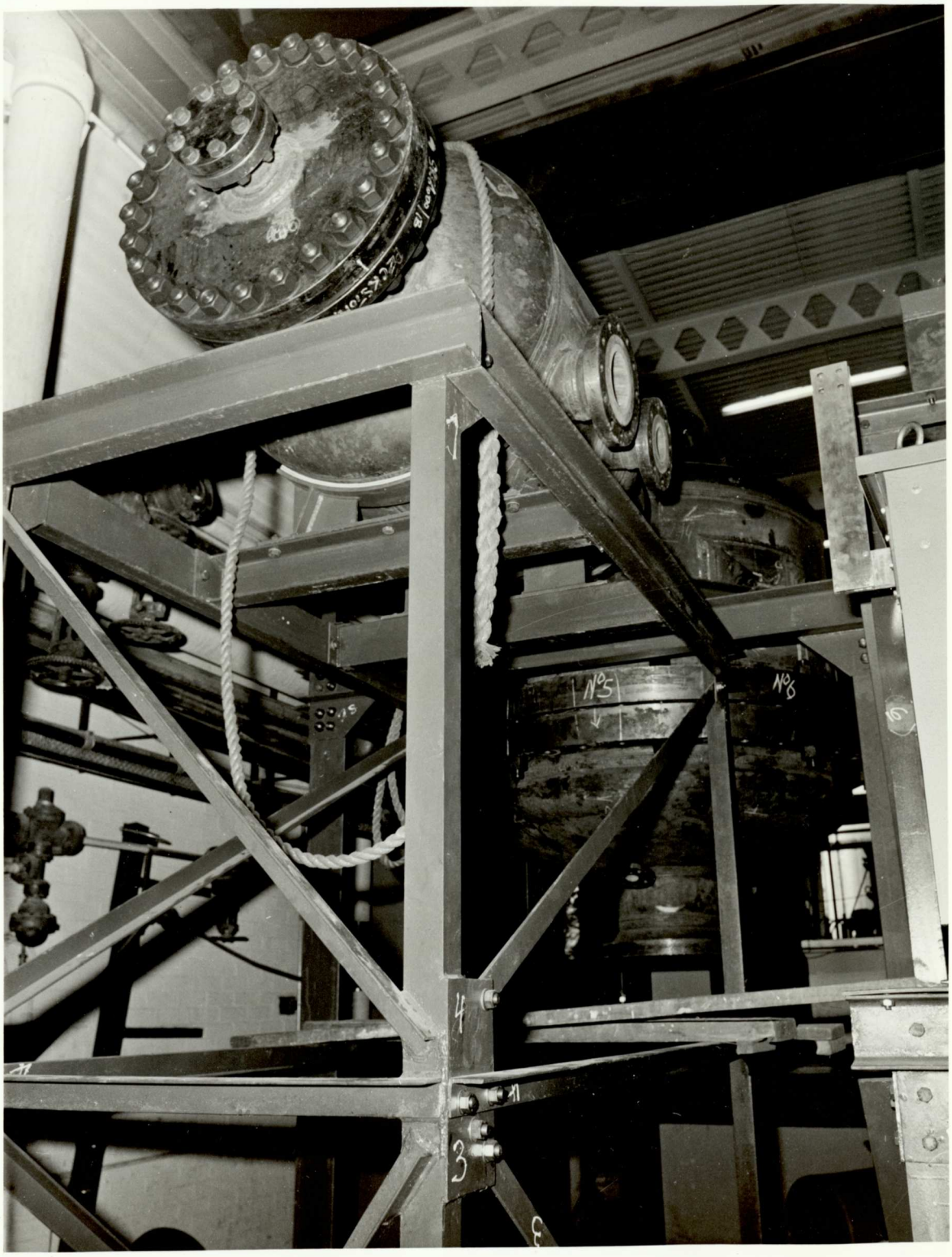

Figure 3.10. Furnace plus reactor vessel on support structure.

Figure 3.11 Nucleonic High Level Alarm Arrangement on Biomass Gasification Test Rig Reactor

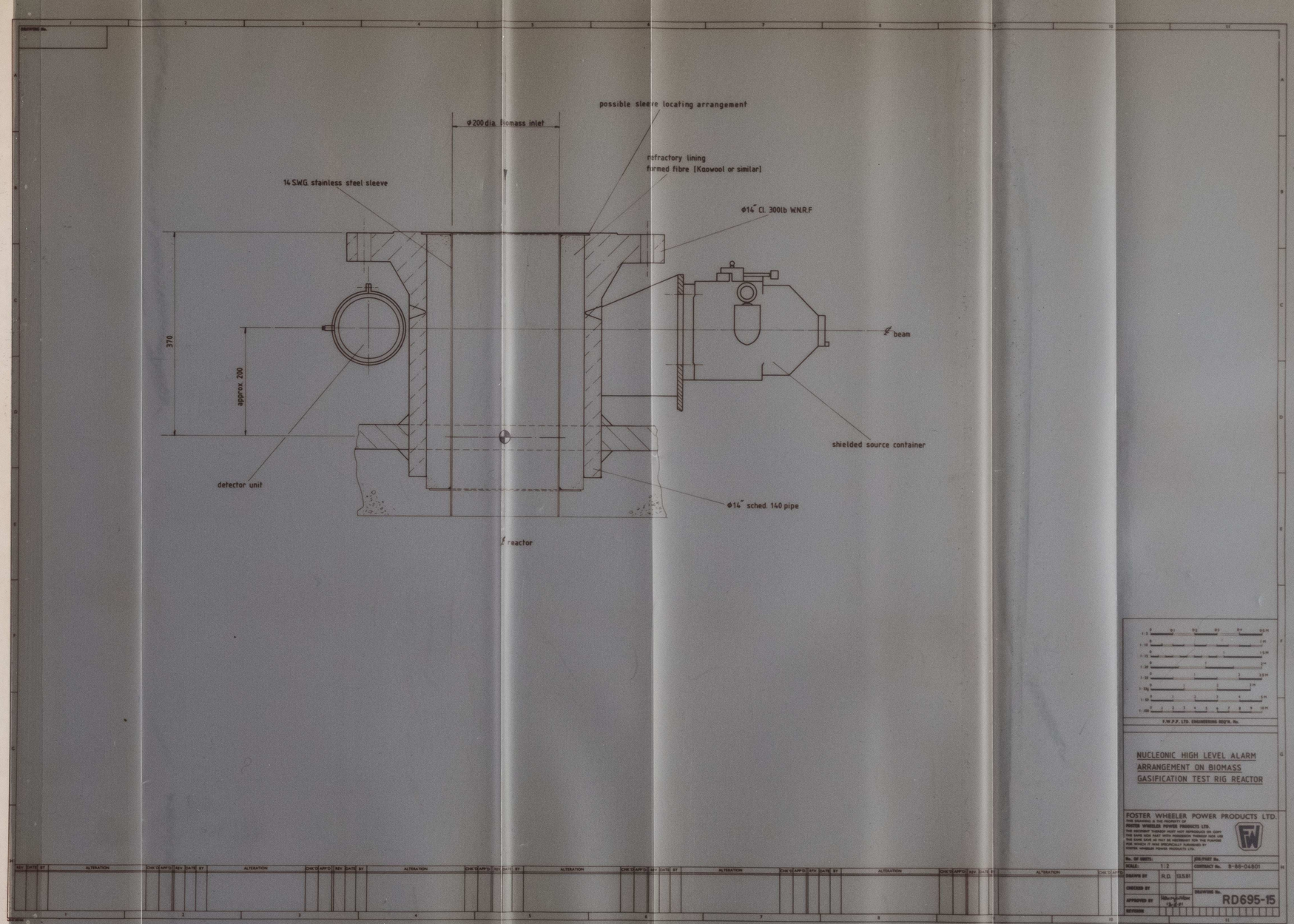



Figure 3.12. View of completed reactor and feed system.

Figure 3.13 Piping and Instrumentation Diagram for Biomass Gasification Test Rig Showing Air Option and Partial Oxidation Reactor

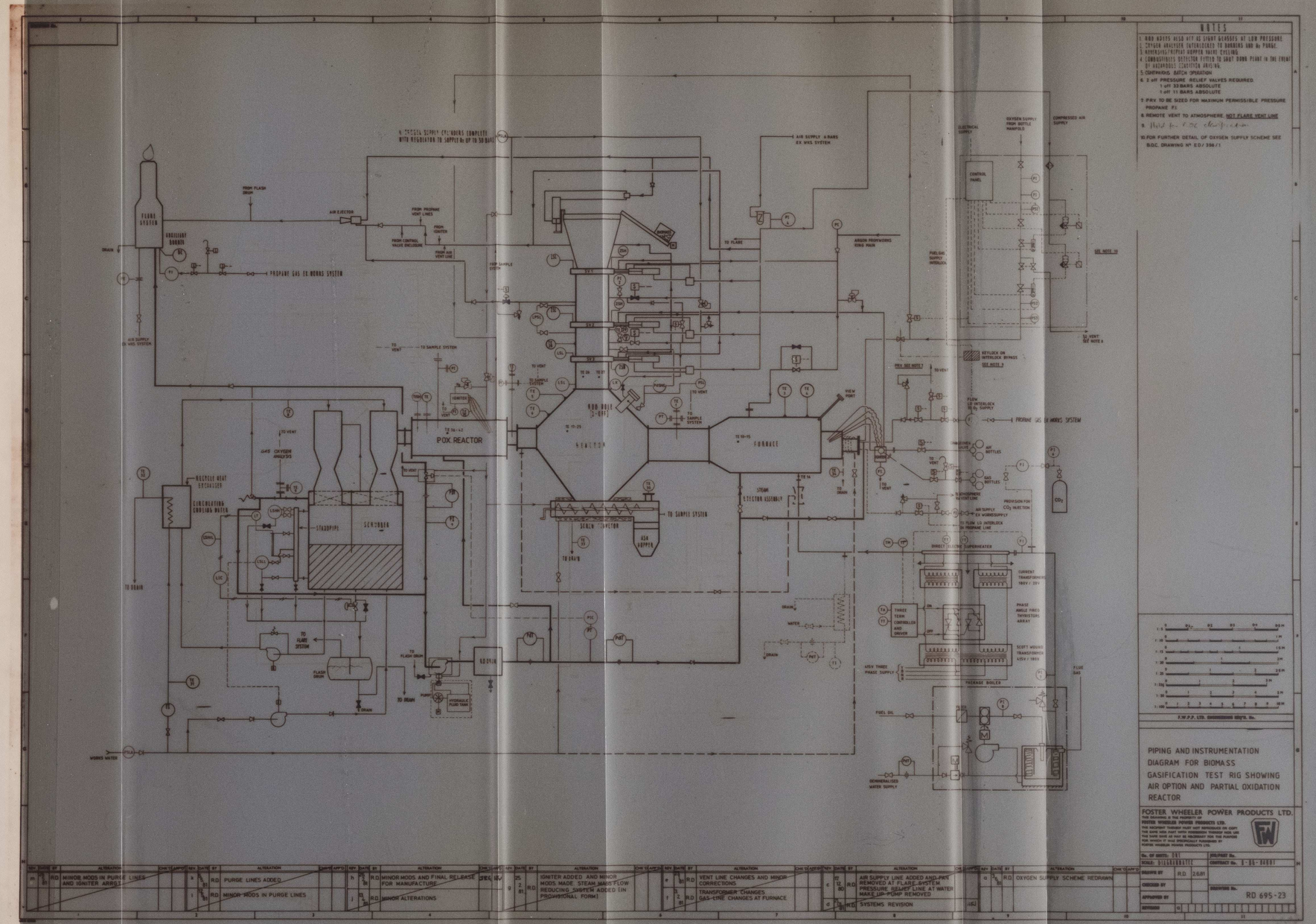

4.0 SOLIDS FEED SYSTEM

4.1 Specification

The solids feed system, shown previously in Figure 3.1, was required to transfer preweighed batches of wood chip feed into a continuously operated, high temperature, pressurised gasification reactor. It must withstand a maximum reactor operating pressure of 30 bar g and maximum temperature of 600 C at the feed nozzle.

The system will deliver and batch feed 10-20 mm size pine 'Hacker' chips to the gasification reactor solids feed nozzle. Feed throughput rate will nominally be 40 kg/h and variable up to a maximum throughput of 100 kg/h of received wood chip. Feeding will take place on a continuous basis. Headroom access is restricted in the test plant building by the crane hook clearance height of 6076 mm.

Reactor feeding is to be undertaken in two stages:

a) elevation of the feed batch from floor to upper level
b) transfer of the feed batch from the upper level into the pressurised reactor.

The feeding cycle will be automatic, following the plant operators' batch weigh and feed sequence initiation.

4.2 Evaluation and Options

4.2.1 High Pressure Feeders

The feed system was designed to satisfy the following requirements:

1) Rating: Unit to be capable of handling the required feed rate on a metered basis.
2) Size: Unit geometry to be suitable for installation in

confined space (location constraint).

3) Pressure: To be capable of reliable, safe, leak-free operation over extended periods at the selected system operating pressure.

4) Temperature: Materials of construction must be suitable for high temperature operation in accordance with A.S.M.E VIII division I design codes.

5) Cost: Due to budget constraints, the unit should be inexpensive and operate economically.

6) Control: Feedrate must be responsive and compatible with gasifier design and operation.

7) Supply: It must provide the feed consistency and distribution required by the reactor.

A range of high pressure feeders is shown in Table 4.1 below. This listing reflects the known position in 1980 [4.1]. It indicates, that proven operational experience was limited mainly to screw feeders and lock hoppers.

TABLE 4.1

Potential High-Pressure Feeders for Wood Residues

Feeder	Operated With Wood Residues?	Suggested Particle Sizes* for Wood Feed		
		1 cm	1-5 cm	5 cm
C.E. Bauer Pressafiner	Yes	P	P	T
General Electric Screw Feeder	No	T	T	T
Ingersoll-Rand Piston Feeder	No	T	T	
Ingersoll-Rand Screw Feeder	No	T	T	T
Koppers Screw Feeder	Yes	P	P	P
Linear Pocket Feeder	No	T	T	P
Lock Hopper Feeders	Yes	P	P	P
Lurgi Piston Feeders	Yes	T	T	
Rotary Feeders	Yes	P		
Stake Technology Screw Feeder	Yes	P	P	T
Werner Pfliederer Screw Feeder	Yes	D	T	

* Based on general characteristics of the feeder design and data obtained in this study.

Key: P = Proven; D = Demonstrated; T = Needs Testing

The state of art of coal feeding systems for coal conversion plants was reviewed at a conference on coal feed systems in 1977 [4.2]. A quite comprehensive assessment on high pressure coal systems was performed by Hawrych in 1980/81 [4.3] and [4.4]. Examination of the review information coupled with the above stated requirements led to the conclusion that a lock hopper arrangement could be the most appropriate choice for the test plant. To check suitability, limited flow characteristic tests were undertaken using an approximately full size mock-up of the proposed feed arrangement. These tests are described in section 4.3.3.

4.2.2 Feed Elevation

Four feed elevation options were considered for the test plant:

a) Pneumatic transportation
b) Belt conveyor (troughed and cleated)
c) Mechanical elevator
d) Funicular hoist

The pneumatic transport option was rejected on the basis of complexity and cost. For similiar reasons, the mechanical elevator system based on either a bucket or chain arrangement, was also rejected. Space limitations would not allow the installation of a conveyor system although cleated belt conveyors (Shultz-type bucket belts) were favoured for their simplicity. The final choice; a funicular hoist, was made on the basis of simplicity, and cost effectiveness.

4.3 Chosen Feed System

The selected reactor feeding system is shown in Figure 4.1 and Figure 4.2. It comprises a funicular hoist with attached feed bucket, feed reception hopper, feed valves and logic control circuit. The hoist bucket discharges

into the upper reception hopper. This is located above a triple slide valve stack, mounted on the feed inlet flange to the reactor. Operation of the feed system is undertaken on a complete logic control basis with the feeding cycle being initiated by the operator loading the feed bucket with a pre-weighed batch and then depressing the 'run' button; shown in Figure 4.5, Figure 4.8 and Figure 4.9. The principal feed system components are described below.

4.3.1 Funicular Hoist

The funicular hoist shown in Figure 4.1 is a proprietary system. It was selected for four main reasons:

a) Fitness for duty (including performance guarantee)
b) Availability
c) Simplicity
d) Low cost

The system comprises a lightweight steel support frame upon which is mounted a reversible drive motor and gear box. The shaft from the gear box has a sprocket wheel drive which provides the motive power for a continuous engaged chain loop. This chain in turn supports a feed box. Microswitches mounted on the support frame trip at upper and lower preset positions. These stop and/or reverse the hoist drive motor, depending upon the system logic status.

4.3.2 Feed Hopper

The reactor feed reception hopper was designed and supplied by the funicular hoist manufacturer. It is mounted approximately 900mm above the main reactor inlet flange and takes the form of a 450mm high inverted, truncated, carbon steel cone. The feed inlet diameter is 415mm. The hopper sits on, and discharges feed batches through, an integral 200mm diameter class 68.19 kg (150

1b) set on raised face (S.O.R.F.) carbon steel flange. This was chosen to allow stud bolting through the flanged housing of a 200mm knife gate isolation valve. Care was taken to remove burrs and weld spatter to ensure a smooth inside surface which would not interfere with feed flow.

To minimize potential dust problems during the hoist operational cycle, a hinged lid with an attached pneumatically actuated ram was fitted. This is mounted on a welded bracket set onto the hopper side and linked to the hopper lid. The lid opens as the feed box rises up the funicular hoist and closes immediately following its retraction, thus limiting dust emission. Gas purge and vent pipes were attached to the hopper wall to maintain an inert gas blanket and permit safe disposal of toxic/flammable leakage gases.

4.3.3 Solids Feed Valves

In the selection of the solids feed valves, it was established that to limit complex design and cost the rig operating conditions would have to be specified within the performance range of readily available proprietary equipment. As noted in section 4.2.1, knife valves were considered to be possibly acceptable. A brief comparative review of valve options was undertaken. The findings supported the knife valve option, but left doubts regarding flow performance. It was decided that some simple model tests would be helpful. An approximate full scale model was built. Samples of wood chippings were obtained from 'Dormet Industries' of Cirencester in three grades as described in Table 4.2. The test details and conclusions are presented below.

4.3.3.1 Description of the Feed Tests

A simple model of the proposed feed valve arrangement (Figure 4.2) was constructed as shown in Figure 4.4. The model differs in three respects from the proposed system, but none of these is thought to alter the validity of the results.

a) The distance between the two upper valves was slightly reduced (due to materials availability for construction)

b) The feed hopper was of different design to simplify construction but had sides at the same angle to horizontal as the proposed design, and offered a more restricted flow path.

c) The lowest heat shield valve was omitted.

A 2 Kg batch of ´Hacker Chip´ was weighed and charged to the hopper, then the two feed valves were opened in sequence, the experiment was repeated with both ´Pulp Fibre´ and ´Milled Chip´ as described in Table 4.2. Results and observations over several runs are recorded in Table 4.3 for both a free filled and a packed load.

TABLE 4.2

Test Feed Materials

Feed	Description
Hacker Chip	- Rough 25 mm Cubic Chips
Pulp Fibre	- Long Chips 25-50 mm x 5 mm
Milled Chip	- Short fine fibres

TABLE 4.3

Experimental Results

Material	Transition	Comments When Packed	Comments When Loose
Hacker chip	Hopper to tube	Does not pack Free flowing Good discharge	Free flowing
	Tube to Reactor	Free flowing Good discharge	Free flowing
Pulp fibre	Hopper to tube	Bridges and hangs up above open valve	Free flowing
	Tube to Reactor	No problems falls through	Free flowing
Milled Chip	Hopper to Tube	Strong bridging	Free flowing
	Tube to Reactor	Empties immediately	Free flowing. High repose angle (45 deg)

The milled chip feed showed a tendency to enter the slide grooves of the model valves. This indicates a possible source of difficulty during actual operations.

4.3.3.2 Test Conclusions

a) The valve interspace volume proposed was more than adequate for a 2 Kg charge of any of the feeds tested; no difficulties were experienced due to different bulk densities.

b) All three feeds tested are free flowing when loose, so normal operation should present no difficulties.

c) In the event of packing occurring, bridging only takes place in the hopper where the blockage may be cleared.

d) The most suitable feed from a materials handling point-of-view is 'Hacker Chip'.

e) Operation of the simulated slide valves posed no problems. There was indication that particles could lodge in the valve housing slot. This could be a problem area.

Consideration of factors previously noted in section 4.1, such as design feed rate (up to 100 Kg/hr wood chips) and space restrictions within the building housing the system, resulted in the choice of 200 mm pneumatically actuated knife gate valves (slide valves). These valves were modified by the manufacturer under instruction, to provide high temperature face seals (max temp 600 C) and specially vented bonnets (sealed steel enclosure surrounding the actuating rams). The bonnets contain and vent to flare, any product gases leaking through the ram shaft seals either in normal operation or if seal wear develops in abnormal operation. All the vents on the valve bonnets are linked to a common discharge line.

The triple valve stack shown in Figure 4.2 and Figure 4.3 was selected for installation on the basis of satisfying the specified operational requirements, these being:

a) containment of hot product gas under pressure, and
b) permitting the feed to enter the reactor

The lower valve in the stack acts both as a heat shield for the valves above it and a gas seal. The valves were fitted, so that the internal reactor pressure acts against the valve sliding gates, in such a manner as to force them up into the seating, making a leak resistant gas seal (see Figure 4.3). Control interlocks ensure that either, only the top valve opens, or the two bottom valves open together.

When the original valves were examined using a dye penetration technique, their bodies were found to have casting cracks as shown in Figure 4.6 and Figure 4.7 because these cracks could have caused catastrophic failure they were replaced. It is important to note the value of the ASME VIII rigorous examination procedures in this instance.

4.3.4 Control System Logic

Upon receiving the 'feed' light signal, which is generated by change in attenuation in a nucleonic level detector (25 millicuries caesium 137 source) mounted on the reactor feed inlet throat (see Figure 3.11), the operator presses the 'run' button (located at ground level). This causes the hoist to operate by initiating the feed logic sequence shown on Figure 4.5, 4.8 and 4.9. The logic system was simulated in the design stage, by a small patchboard bulb circuit, in order to shorten development time.

The feed bucket rises to the upper level, tripping two micro switches, M1 and M2 (Figure 4.1), located on the hoist structure as it does so. The micro switches are positioned at the top and bottom of the feed bucket tracking run. Within the feed control sequence, the pneumatically operated feed hopper lid opens and the feed

bucket tips its pre-weighed contents into the upper feed hopper, whereupon the hoist retracts returning the bucket to ground.

The solenoid valve S2 on the vent system, shown in Figure 4.2, opens permitting the interspace pressure between the upper and middle slide valves to equalize to atmospheric pressure by venting. At this point the upper slide valve SV1 opens, allowing the feed in the hopper to fall into the valve interspace.

After a pre-selected time (set by logic timers), to allow the material to fall and settle (determined by experiment-typically 3-4 secs), the upper slide valve SV1 closes and the upper interspace is pressurized with nitrogen to the set rig operating pressure. Gases vented by opening the purge solenoid valve and also feed hopper vent gases, are directed to the product gas flare for safe disposal. A non-return valve located down stream of the vent valve S2 prevents air being drawn back into the valve interspace and forming a potentially explosive mixture.

To reduce the overall feed cycle time to a minimum, the nitrogen fill rate into the valve interspaces was controlled by a timer on the inert gas inlet solenoid S1, (this sequence is shown on figure 4.5). Initially, the two solenoid valves S1 and S2 are open together, the nitrogen acting as a purge. When the solenoid S2 is energised it closes and there is an immediate rapid pressurisation of the upper valve interspace before solenoid S1 closes. This provides quick pressurization of the upper interspace, which is then topped up by opening S3 to bleed nitrogen in and complete pressurization. A non-return valve located down stream of S3 prevents any reverse flow. Nitrogen flowing to S3 and the interspace between the bottom two valves, SV2 and SV3, is bled in by a forward control pressure relief valve.

Once the upper interspace pressure equalizes, the lower two slide valves in the stack open and close simultaneously with a suitable delay of typically 3-4 seconds, discharging the feed batch into the reactor throat. There is no vent arrangement on the lower valve interspace because the trapped volume is very small.

A nucleonic level detector, (gamma switch), located at the top of the reactor inlet flange (Figure 3.11), indicates 'full' on the operator control consol until the feed interface level within the reactor falls to such an extent as to cause a change in nuclear attenuation. The feed interface falls as the charge in the reactor is gasified. The gamma detector reacts to the change and alarms resetting the start feed sequence, whereupon the cycle is repeated.

Pressure sensors mounted across each of the feed valves are interlocked with the valve opening cycle to prevent the valves:

(a) all opening together
(b) opening until pressures equalize in the manner described.

In addition to the pressure sensors across each valve, there is a pressure sensor mounted between the bottom two valves SV1/SV3 and the main reactor vessel. The two feed valve interspace volumes have both temperature (Cr/Al surface thermocouples) and pressure monitors (quartz crystal sensors). These form part of the interlock logic for both control and safety reasons.

4.3.5 Design

The upper feed hopper, mounted approximately 900mm above the main reactor inlet flange, is 450mm high with an inlet diameter of 415 mm. The hopper has an integral lower 200mm diameter class 68.19 kg (150 lb) S.O.R.F.

carbon steel flange, which is bolted through a 200mm diameter pneumatically actuated knife gate valve, to a similar flange, located on a 200mm diameter standard weight carbon steel reception cylinder (feed tube). Two 25mm sq x 20mm thick pads are welded to the tube and drilled through to accept purge and inert gas pipes.

The upper feed tube is 420mm between flanges, size being determined by the maximum proposed feed batch of 'Hacker' chips (approx 10 kg). The lower tube flange is bolted through two further 200mm diameter knife gate valves in turn, separated by a 300 mm o.d.x 200mm i.d x 35mm thick raised face stainless steel spacer ring. The ring is drilled to ANSI B16.5 68.19 kg (150 LB.) The lower valve connects with a 200mm diameter class 68.19kg (150 lb) S.O.R.F. in stainless steel. This flange forms the upper part of a second 200mm diameter stainless steel cylinder, which is in turn bolted to the reactor feed inlet via a 355.6mm (14inch) diameter class 136.1 kg (300lb) blind flange, bored to suit the connecting 200mm diameter standard weight cylinder. The top flange of the reactor is approximately 4215 mm above floor level.

The stainless steel spacer ring is drilled and tapped to accept two duplex pocket thermocouples, located 180 degrees apart on the circumference. The thermocouples are used to monitor the valve interspace temperature and hence valve integrity in relation to the allowable design stress. In the event that a temperature above 600 C is detected at the spacer ring, a dedicated microcomputer (Apple IIe) is programmed to alarm, and automatically close down the rig, venting product gas to flare whilst flooding the system with inert gas. The spacer ring has three further through holes to suit pipe socket-welded connections for two differential pressure switches and an inert gas line. The inert gas line serves the same purpose as the pressurised seals previously described, and in addition, minimises the pressure drop across the 'hot' lower valve. The differential pressure would not

normally exceed a preset value of between 127-254 mm w.g. (5-10 ins w.g.). The differential pressure switches are interlocked with the feed logic system to ensure that the feed valves can never open simultaneously whilst the system is pressurized.

4.4 Operation

The operator weighs out a 2-4kg batch of wood chips and fills the hoist feed bucket when it is in the retracted (ground) position. In response to an alert 'feed' signal from the feed control cubicle, the logic sequence is started by pressing the 'run' button, the feed bucket is then drawn up the hoist. The complete valve operation sequence previously outlined in section 4.3.4 is then initiated and completed.

4.5 Safety

Leakage gases are vented to the product gas flare via small-bore pipe lines (12.5mm diam). To ensure that dust in the feed does not result in blockage of the vent lines, replaceable mesh plugs are installed in the line ends adjacent to the feed valves. The vent pipes connect into a common system manifold which is maintained at a low negative pressure (approximately 75 mm w.g.) by a simple, air operated venturi, linked to the product gas flare discharge pipe. To further limit gas leakage, the slide valves were also specified to be provided with lapped slide surfaces. The metal-metal contact surfaces were hand ground to close parallel finish (between 0.02 and 0.005 in).

4.6 Commissioning

The feed system was 'cold' commissioned up to the feed tipping part of the logic sequence. It was found that the micro-switches located on the funicular hoist were incorrectly located in relation to the bucket start

position and also the feed bucket 'tip' position. These were relocated and reset, following which they operated satisfactorily. However, it was considered that non-intrusive (proximity) switches would been more suitable, due to the higher level of reliability arising from lack of physical contact with the feed bucket.
The choice of slide valves was only made after constructing and testing a full-size mock-up of the proposed system in 'cold', low pressure trials. There was insufficient funding available to permit hot trials and therefore the results of the limited tests, whilst apparently satisfactory, must be subject to confirmation.

In selecting slide valves rather than any other type of valve, it was noted that there was a potential for feed to jam in the gate slot - particularly in the forward or 'closed' state. This problem was examined in the model, but there was no evidence that it would be a difficulty. However, it was not possible to simulate continuous cyclic operation and this must remain an area of doubt.

Leakage of product gas is hazardous, not only in view of its toxic nature, but also from its temperature, which can cause mechanical failure if stress-temperature characteristics of critical components such as valves are exceeded in the pressurized system. Care was taken to limit product gas leakage by packing the feed valve stuffing box ram shaft seals with a high temperature resistant material. The stuffing box bodies were connected to a common inert gas source which, in an experimental run, would have delivery pressure set higher than the run pressure. In the event of seal breakdown, inert gas would leak into the test plant, rather than have product gas leaking out. This could result in a higher than expected inert gas content, during extended runs, where seal damage will take place due to entrapped grit from the feed, causing seal erosion.

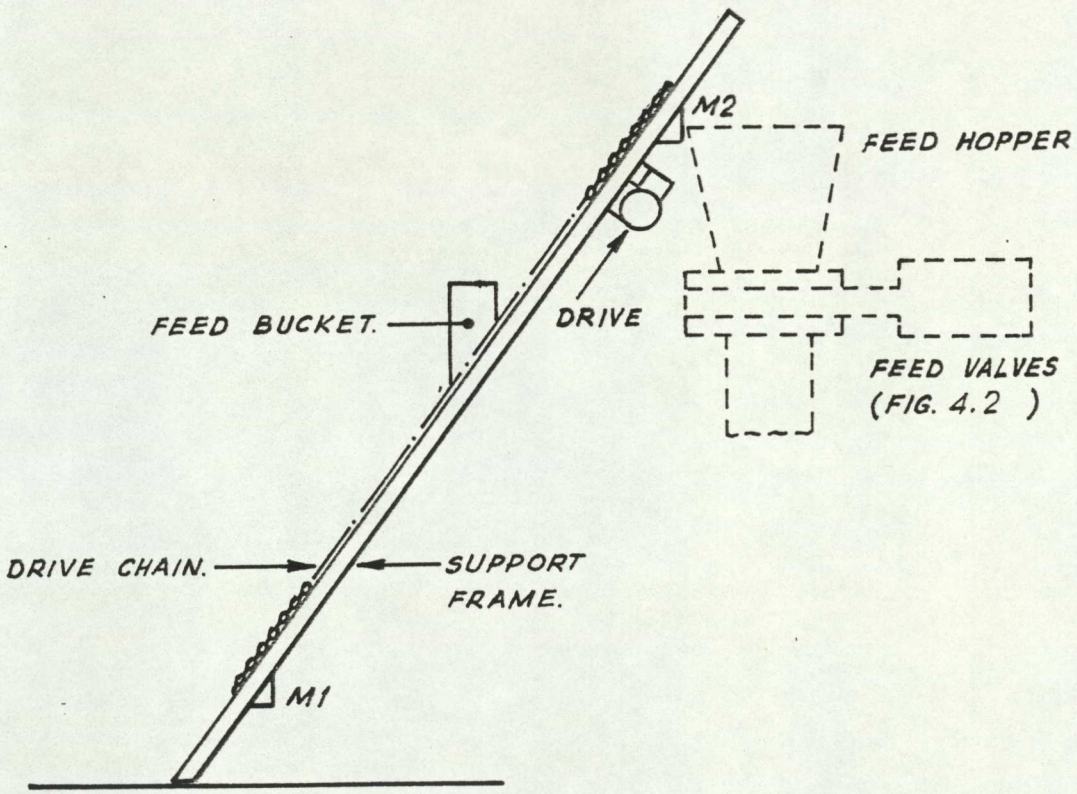

FIG. 4.1 - FUNICULAR HOIST.

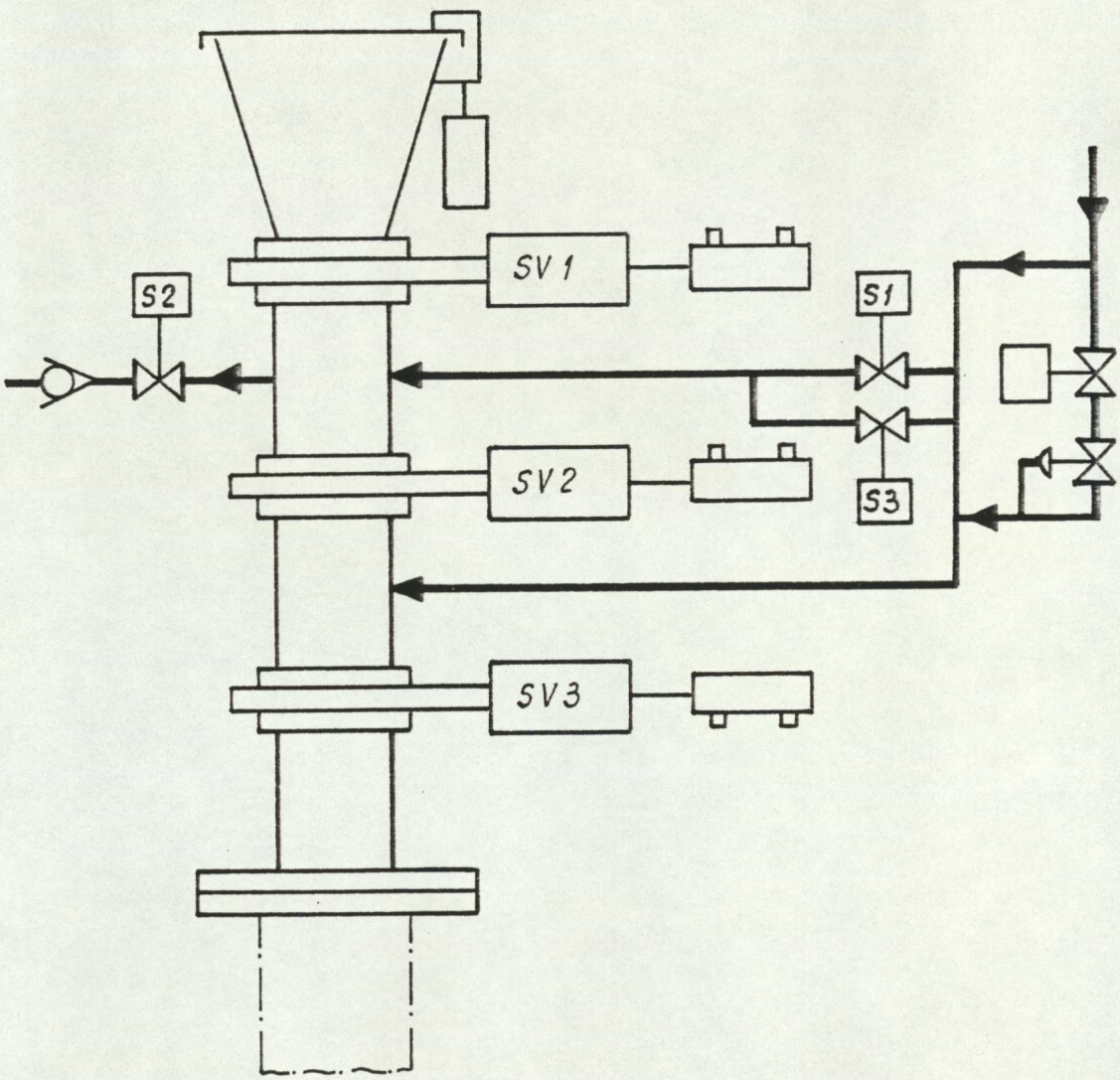

FIG. 4.2 - FEED VALVE SCHEMATIC.

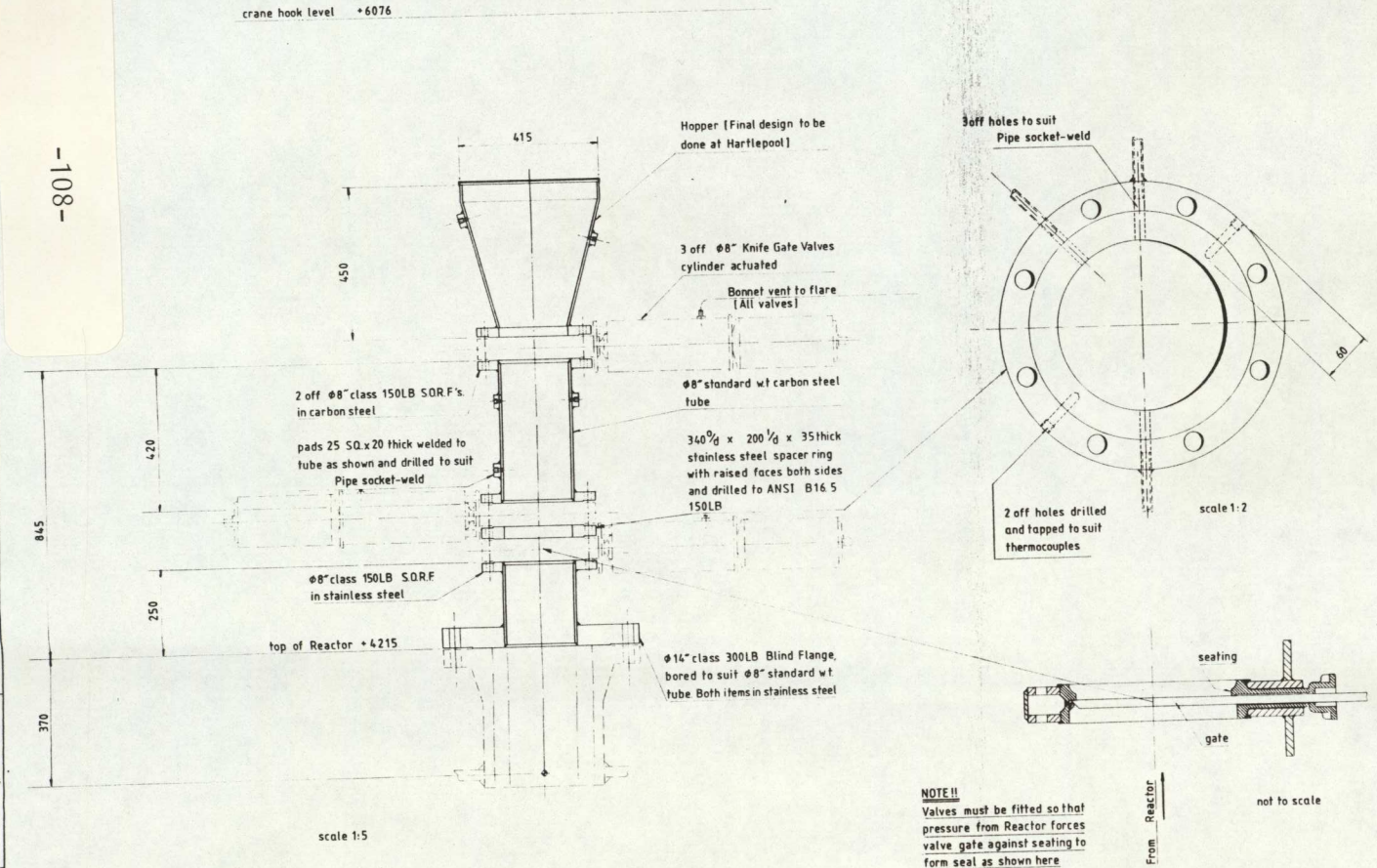

NOTE!!
Valves must be fitted so that pressure from Reactor forces valve gate against seating to form seal as shown here

ALL PIPE CONNECTIONS TO BE IN CONJUNCTION WITH P&I DIAGRAM RD 595-1

FIGURE 4.3

FEED VALVE ARRANGEMENT FOR BIOMASS GASIFICATION TEST RIG

FOSTER WHEELER POWER PRODUCTS LTD.

REV.	DATE	BY	ALTERATION	CHK'D	APP'D
A	13/1/81	RD	SPACER RING DETAIL ADDED INFORMATION REVISED		
B	19/1/81	RD	8" CLASS 300LB S.O.R.F CHANGED TO CLASS 150LB AND REVISED TO P&I DIAGRAM RD 595-1		

No. OF UNITS:	JOB/PART No.
SCALE: as stated	CONTRACT No. 8-86-04801
DRAWN BY RD 20/1/81	
CHECKED BY	DRAWING No. RD 695-5
APPROVED BY	
DIVISION A B	

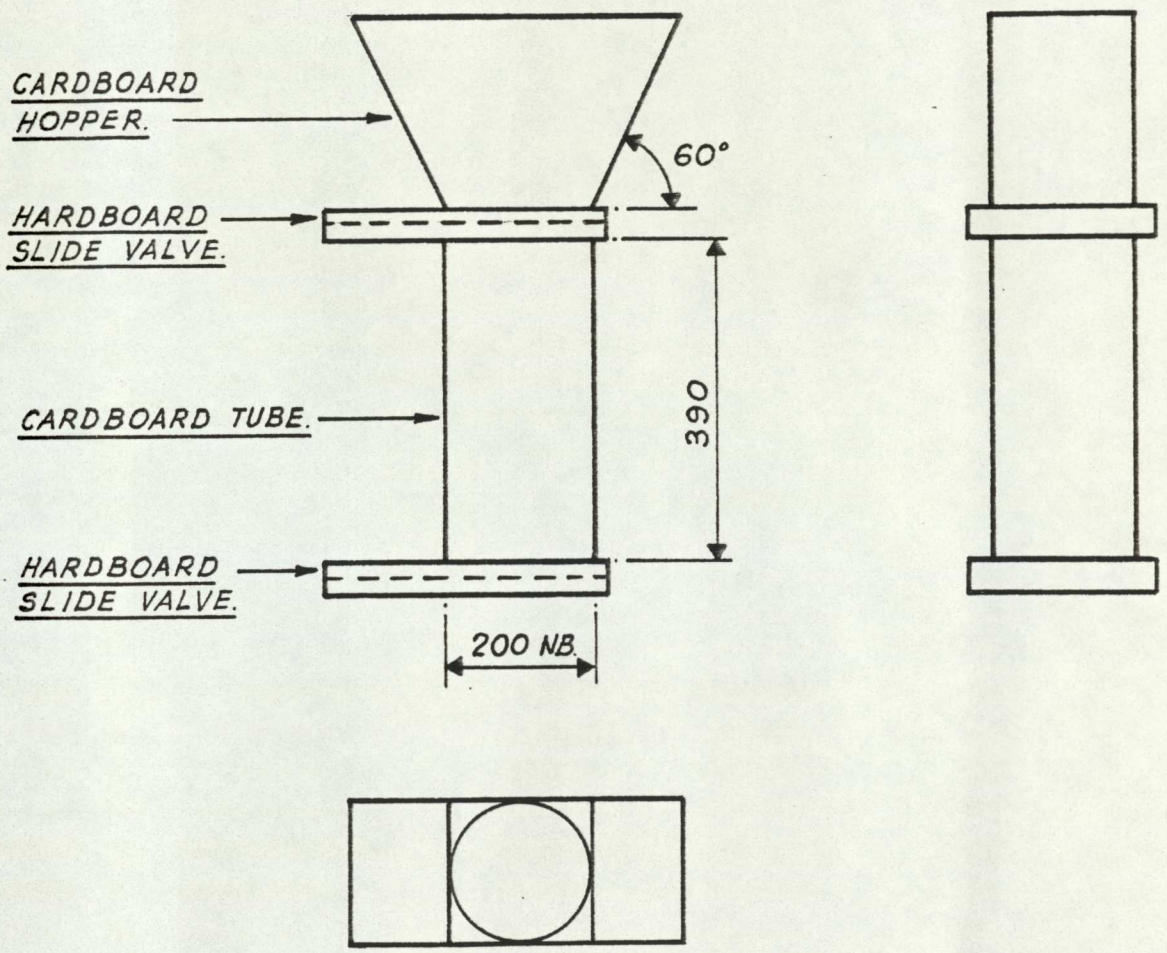

FIG. 4.4 - FEED VALVE MODEL.

Figure 4.5 Biomass Gasification Test Rig

Feed Valve Logic Diagram

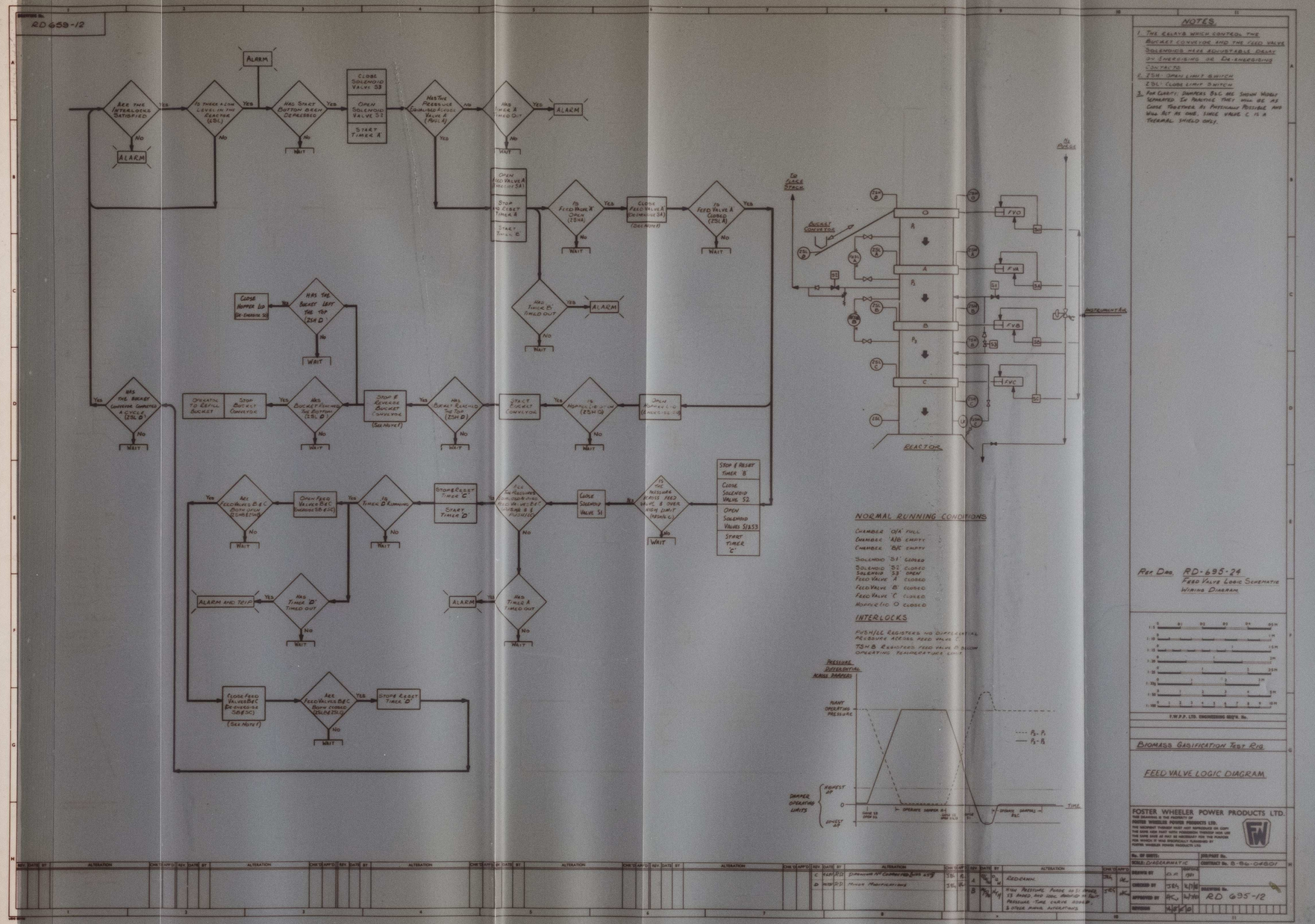
RD 695-12
NOTES
1. THE RELAYS WHICH CONTROL THE BUCKET CONVEYOR AND THE FEED VALVE SOLENOIDS ARE ADJUSTABLE DELAY BY ENERGISING OR DE-ENERGISING CONTACTS
2. TSH: OPEN LIMIT SWITCH
ZSL: CLOSE LIMIT SWITCH
3. FOR CLARITY, DAMPERS B&C ARE SHOWN WIDELY SEPARATED. IN REALITY THEY WILL BE AS CLOSE TOGETHER AS PHYSICALLY POSSIBLE AND WILL BE AS ONE, SINCE VALVE C IS A THERMAL SHIELD ONLY.
ALARM
Are the Interlocks Satisfied
Is there a low level in the reactor (LSL)
Has Start Button been Depressed
Close Solenoid Valve S3
Open Solenoid Valve S2
Start Timer A
Has the Pressure Equalised across Valve A (PSH A)
Has Timer A timed out
Open HO Valve A (Helicoid SA)
Stop HO Reset Timer A
Start Timer B
Is Feed Valve X Open (ZSH X)
Close Feed Valve X (Solenoid SX) (See Note 1)
Is Feed Valve A Closed (ZSL A)
Has Timer B timed out
Close Hopper Lid (De-energise SO)
Has the Bucket left the Top (ZSH D)
Has the Bucket completed a cycle (ZSL D)
Operate to Refill Bucket
Stop Bucket Conveyor
Has Bucket reached the Bottom (ZSL D)
Stop & Reverse Bucket Conveyor (See Note 1)
Has Bucket reached the Top (ZSH D)
Start Bucket Conveyor
Is Hopper Lid Open (ZSH Q)
Open Hopper Lid (Energise SO)
Stop & Reset Timer 'B'
Close Solenoid Valve S2
Open Solenoid Valves S1&S3
Start Timer 'C'
Are Feed Valves B & C both open (Closed)
Open Feed Valves B&C (Energise SB&SC)
Is Timer D Running
Stop & Reset Timer 'C'
Start Timer D
Is the Pressure across Feed Valve B & C Equalising
Close Solenoid Valve S1
Is the Pressure across Feed Valve B & C over High Limit (PSHL C)
Has Timer D timed out
Alarm and Trip
Has Timer A timed out
Close Feed Valves B&C (De-energise SB&SC) (See Note 1)
Are Feed Valves B&C both closed (ZSL B&C)
Stop & Reset Timer 'D'
NORMAL RUNNING CONDITIONS
Chamber O/A Full
Chamber A/B Empty
Chamber B/C Empty
Solenoid S1 Closed
Solenoid S2 Closed
Solenoid S3 Open
Feed Valve A Closed
Feed Valve B Closed
Feed Valve C Closed
Hopper Lid O Closed
INTERLOCKS
PSH/LL Registers no Differential Pressure across Feed Valve C
TSH B Registers Feed Valve B below operating temperature limit
Reactor
Instrument Air
Pressure Differential across Dampers
Plant Operating Pressure
Damper Operating Limits
Highest
Lowest
Time
Operate Damper B1
Operate Damper B2
Operate Damper B3
Operate Damper B4
Operate Damper B5
Operate Damper B6
Operate Damper B7
Operate Damper B8
Operate Damper B9
Operate Damper B10
Operate Damper B11
Operate Damper B12
Operate Damper B13
Operate Damper

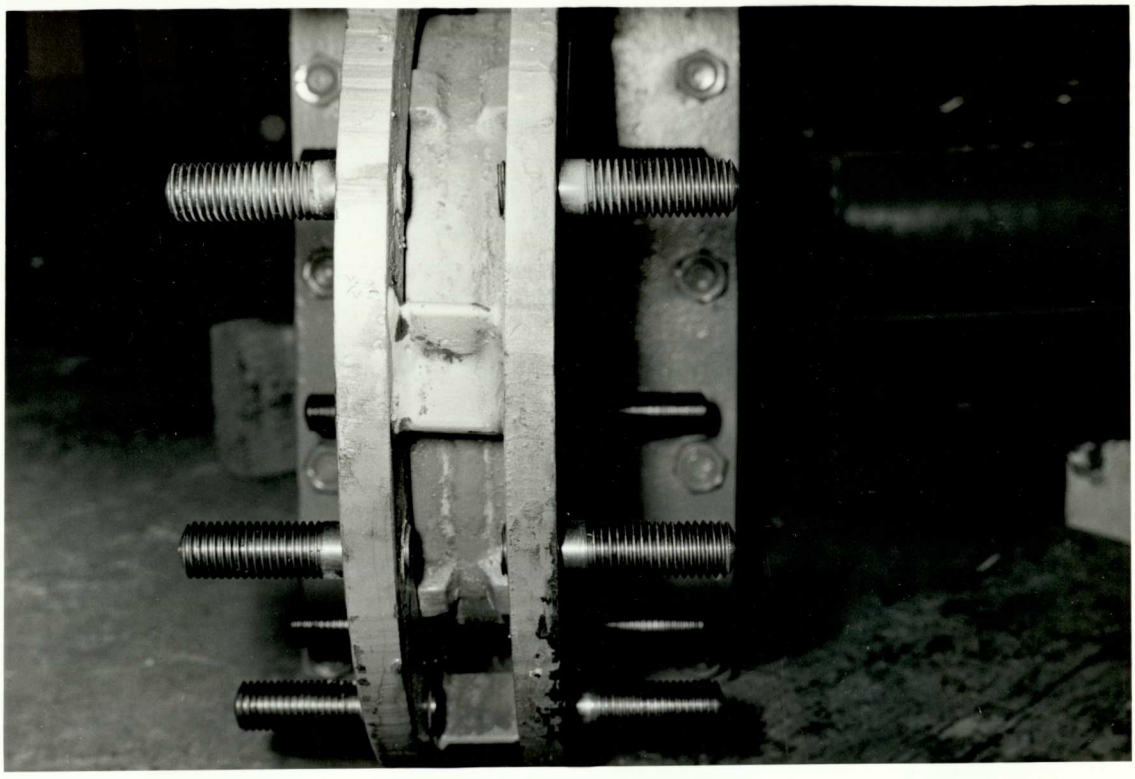

Figure 4.6. Feed valve showing crack damage (N.D.E.)

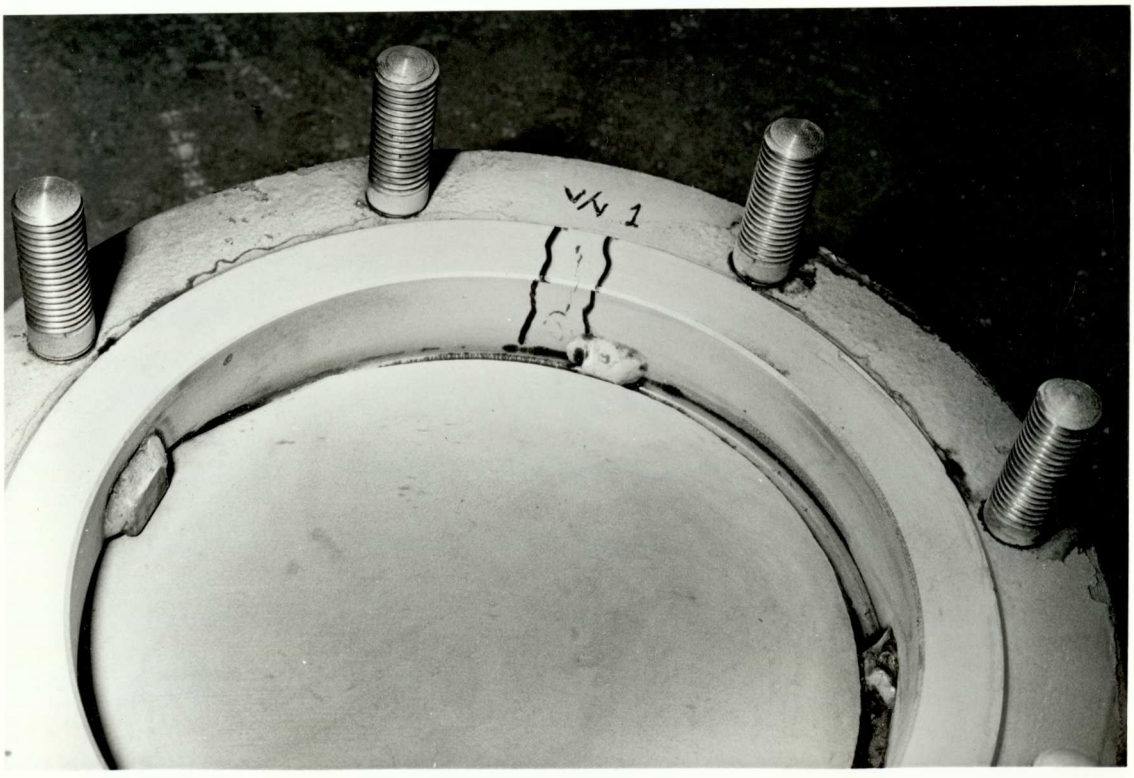

Figure 4.7. Feed valve showing crack damage (N.D.E.)

Figure 4.8 Biomass Gasification Test Rig
Feed Valve Logic Schematic Wiring
Diagram (Logic Sequences)

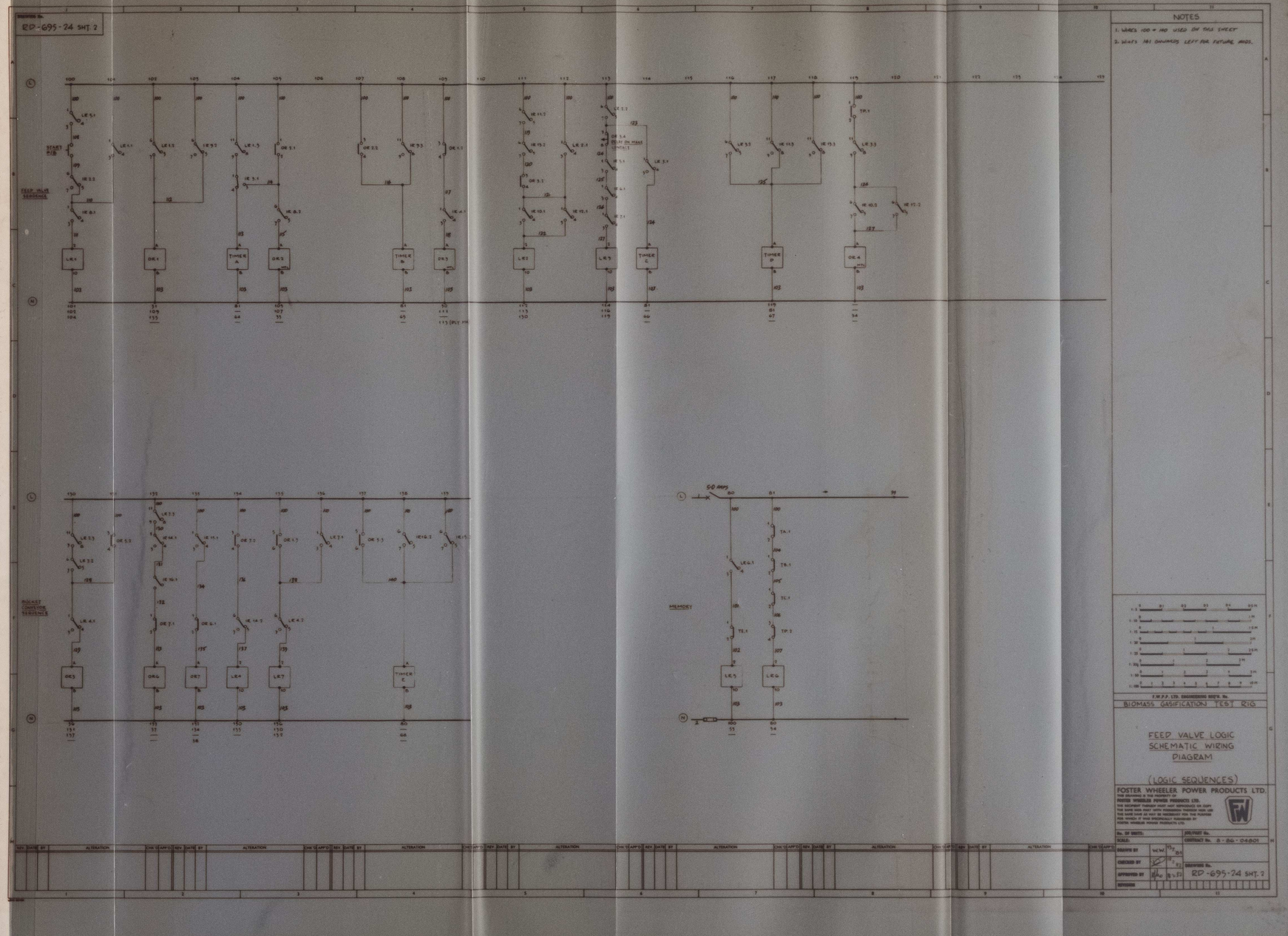

Figure 4.9 Biomass Gasification Test Rig Feed Valve Logic Schematic Wiring Diagram (Inputs and Outputs)



5.0 MAIN GASIFICATION REACTOR

5.1 Specification

The gasification reactor was required to process up to 100 kg/h of solid wood chip feed, at a design feed rate of 40 kg/h. It operates at pressures up to $3x10^6$ N/m^2 g (30 bar g) with a maximum metal temperature of 300 C. Internal refractory lining will maintain a maximum shell metal temperature of 300 C with a maximum bed temperature of 1200 C. To permit installation of refractory, and allow flexibility in selection of alternative internal reactor configurations, the vessel required two girth flanges integral with the strake (cylindrical body shell). A heat resistant gasket was to be employed to make a gas-tight seal between the mating flange surfaces.

The vessel required a. feed inlet, residue outlet and a gas inlet and product gas outlet. Refractory and reactor temperatures were to be monitored by thermocouples located in shell thermopockets. A flanged nozzle was positioned on the product gas discharge nozzle, for instrument mounting. It was also required have rodding/sight glass nozzles on the upper head.

TABLE 5.1

Reactor Vessel Design Specification

Design code:	A.S.M.E VIII Div 1
Working pressure (WP):	29.0 bar g
Safety valve pressure(WP x 1.1):	31.9 bar g
Vessel design pressure:	32.0 bar g
Hydrostatic test pressure:	48.0 bar g
Design temperature*:	300 C
N.D.E.+:	Radiography 100% main seams

* Maximum surface temperature of vessel

+ Non-Destructive Examination

5.2 Evaluation of Reactor Configuration Options

5.2.1 General Considerations

During the course of gasification, feed is converted to gas and organics, leaving a small residue which discharges into the ash removal system. The product gases and organic condensate pass from the reactor in addition to unconverted gasification medium.

The conceptual design of the main gasifier vessel shown in Figure 5.1, was based on experience acquired by the author in operating a 40 Kg/h cross-flow pyrolysis reactor (XFR) [5.1]. The working reactor volume of this reactor was 0.09 M^3 (1 cu ft) and the pyrolysing gas was supplied at atmospheric pressures and temperatures up to 1000 C. Because of the potentially hazardous combination of high temperatures and pressures coupled with toxic/flammable gas production, it was considered prudent to utilise the available operating experience on the known XFR system in initial pressurised operation as a first stage of development. Therefore, the first reactor configuration selected for tests was based on a XFR. In the XFR pyrolysis trials it was found that a gas:feed ratio (recycle ratio) of approximately 3.7:1 gave satisfactory results. A ratio of 4:1 was selected as the design basis for the gasification test facility. For a design feed rate of 40 kg/h a gas rate of 160 kg/h is required.

There are a large number of possible reactor configurations including cross-flow, updraft, downdraft, fluidized bed and entrained bed [5.2]). To limit the scope of work in the first phase of research, the decision was taken to initally select only the cross-flow and downdraft options, reserving a third possible option for later assesment; either a fluidized or entrained Bed. This limiting constraint was partially offset by a further decision to include a partial oxidation reactor (POX) downstream of the main reactor as shown in Figure

3.2 and Figure 5.2 (also see chapter 6.0). Further details of the alternative options are presented below in sections 5.2.2 to 5.2.4.

5.2.2 Cross-flow Reactor

Reactor function is shown schematically in Figure 5.3. The three integral stages: Drying, Pyrolysis and Gasification, take place in progressive overlapping steps as the feed batch travels vertically in plug flow through the reactor, being contacted with a horizontal flow of the selected gasifying medium, which passes through the plug, sweeping the gasification and pyrolysis products into the gas clean-up system. Solid residue, consisting of unreacted feed, char and ash is removed from the bottom of the reactor (see also Appendix 2.5).

5.2.3 Downdraft Reactor

The hatched reactor section detailed in Figure 3.7 represents an alternative configuration of refractory, permiting the unit to operate in the downdraft mode. In this example, the gasifying medium enters the reactor horizontally to the feed flow (plug feed) and then travels down the reactor shaft along with the feed material. With this arrangement, there is provision for direct oxygen injection into the feed reactor shaft. Solid residue is removed from the bottom of the reactor and the product gas, along with any remaining gasifying medium, is passed out from the reactor by an integral refractory conduit (see also Appendix 2.5).

5.2.4 Other reactor options

Alternative reactor configuration options selected for the experimental study are discussed in chapter 14.0 and summarized in Figure 14.2. On completion of the experimental studies with the initial reactor configuration, the specified configurations would be incorporated by

partially dismantling the plant to permit removal of the reactor. The alternative reactor types which could be installed were not specified in detail, due to time and finance constraints.

5.3 Detailed Design of Main (external) Reactor Shell

5.3.1 Vessel Calculations

The reactor vessel was fabricated by a small, local specialist (ASME cerificated) sub-contractor because its relatively small size meant that it would be uneconomic to fabricate it in-house. The use of subcontractors for such work is standard practice, where accomodating small construction requirements is difficult. The initial design and manufacturers specification drawings were developed 'in-house' Figure 5.4. To comply with industrial Health and Safety requirements (chapter 2.0) the detailed calculations were put through a rigorous checking procedure prior to approval/release. The manufacturers interpretation of the design information, in the form of the fabrication drawing was also checked, see Appendix 5.1, Appendix 5.2, Appendix 5.4 and Figure 5.5. The typical flowline for ASME certificated design and fabrication is shown in Figure 5.6. Some of the main problems to arise during fabrication of the reactor vessel are discussed below in section 5.4.

5.3.2 Description of Reactor Vessel

The reactor vessel shown in Figure 5.4 and Figure 5.5 consists of two flanged torispherical heads separated by a cylindrical strake. The upper and lower reactor sections connect to each other via a 'Flexatallic', spiral wound asbestos filled gasket and stud bolts on the girth flange. There are four major flanged nozzle penetrations: gas inlet and outlet, and feed inlet and outlet. Six thermopockets housing duplex Cr/Al thermocouples are welded into the strake. Two of these are mounted in

opposition, sited respectively at 90 and 180 degrees to the main inlet gas nozzle. The other four are also mounted in the strake being set equi-distant on the circumferance and located above the main flange.

The upper torispherical head is fitted with two rodding/sight nozzles. Sight glasses in the nozzles would be replaced by a blank flange for operational pressure in excess of 5 bar g (for safety). Rodding, (to clear blockages) would only take place in an unpressurized system. Both of the nozzles have a cooling/purge gas provision to thermally protect the sight glass and minimize condensation.

5.3.3 Material Properties

Full details and check calculations are given in Appendix 5.1. Materials were specified with reference to operating conditions in relation to ASME VIII Div I. Particular attention was paid to the stress-performance characteristics and potential hydrogen embrittlement(as discussed in chapter 2.0). Tables 5.2 and 5.3 below, summarise the key design information.

TABLE 5.2

Material Properties

Item	BS OR ASME CODE	ALLOWABLE STRESS (MN/M^2)	BS OR ASME REF
Shell	BS 1501-224 (32B)*	115	UA 500
Heads	BS 1501-224 (32B)	115	UA 500
Flanges	BS 1503-224 (32B)	123	BS 1503-1969
Piping	SA 106 GRB	103.4	UCS 23
Bolting	SA 193 B7	172.4	UCS 23
Nuts	SA 194-24		

* From BS 1501 addendum 4 (1973)

TABLE 5.3

Minimum Thickness

ITEM	t_{min} mm	t_{actual} mm
Strake	20.52	35 (33 corected*)
Torispherical Heads	35.81	45 (43 .....)

* corrected for 2 mm corrosion allowance

TABLE 5.4

Flange Connections

Item	t mm	t_{actual} mm
12" NB SCH 120	4.368	25.40 (23.40 corrected)
14" NB SCH 140	4.67	31.75 (29.75 .....)
16" NB SCH 100	5.645	26.19 (24.19 .....)
1.5"-XX Strong	0.504	10.16 (8.16 .....)
Thermopockets		
(0.5"NB SCH 160)	0.249	4.78 (2.78 .....)
Torispherical Head		
(Spherical portion)	20.23	45.00 (43.0 .....)

5.3.3.1 Neck flanges

The neck flanges have a pressure rating of 464.1 lbf/in^2 at 300 C for material type BS 1503-224 (32B). As the maximum pressure rating of a class 300 lbf flange is 555 lbf/in^2 [5.3], this was adequate for the duty.

5.3.3.2 Stud bolts

A total of 36 off 1.75 in UN-8-2A stud bolts were used to hold the girth flanges together. The bearing stress S_g was calculated to be 12083.6 lbf/in^2. This is within the 10-25000 lbf/in^2 range recommended by Flexatallic [5.4] for their flange sealing gasket and therefore acceptable.

5.3.3.3 Nozzle Reinforcement

Nozzle reinforcement requirements were calculated on the basis of loss of vessel strength due to penetrations removing part of the original metal. To restore original vessel integrity (the vessel behaving as though there was no nozzle), account was taken of nozzle area including weld runs. The total area must be equal to or greater than the original, or the nozzle penetration must be reinforced either by additional weld run or by addition of suitable reinforcement rings.

TABLE 5.5

Reinforcement Requirements

Item	Nozzle	Area mm^2 Required	Available.
Shell Strake	12" NB SCH 120	5685.07	9004.1
Head*	14" NB SCH 140	5990.10	11022.2
Head	16" NB SCH 100	7242.74	11173.3
Head	1.5"NB XX STRONG	1143.77	1146.0
Pipe	12" NB SCH 120+	139.5	1482.2
Thermopocket		323.8	1005.3

* calculated as a ´set-on´ nozzle

+ 1.5" NB XX STRONG

5.4 Reactor Vessel Fabrication

5.4.1 Sub-contracting

As noted in section 5.3.1, the reactor vessel fabrication was sub-contracted. Although convenient and less expensive initially, the arrangement was not wholly satisfactory due to reduced production control. This became important when the company was taken over. To progress the job, regular expediting was performed.

5.4.2 Reactor Girth Flanges

One problem which was anticipated during manufacture, was possible girth flange distortion, arising from welding the flanges to the vessel strake. To limit the thermal distortion, the girth flanges were bolted together prior to welding. On completion of fabrication a Flexatallic gasket was located between the two girth flanges, the nozzles were blanked and the vessel filled with water for witnessed hydraulic testing in accordance with ASME certification requirements. Figure 5.7 shows the completed reactor and furnace under hydro-test (also see Figure 5.6).

The water pressure was manually raised to 48 bar g and held for 30 minutes to check for leakage. Initial 'weeping' from the flange was stopped by increasing the flange bolt torque (see section 5.4.3). The test was repeated to the satisfaction of the insurance inspector. On delivery of the reactor vessel it was necessary to unbolt the girth flanges, in order to permit installation of refractory (the hydraulic pressure test could not be undertaken with refractory in place). Due to welding as discussed above and despite the precautions taken, the flanges had distorted. The sub-contractor had compensated for the distortion, which allowed the gasket to leak as it was not seated correctly, by applying an excessive torque to the flange bolts. The vessel had to be dispatched to a

further sub-contractor to have the flange faces machined parallel. Following which, it was re-tested in accordance with ASME procedure.

5.4.3 Tightening Torque

A variety of formulae exist for the calculation of recommended tightening torque and these vary in result and complexity. Due to the imprecise nature of friction parameters and predominance of friction conditions it is stated [5.5] that there is no point in using any expression more complicated than:

$T = {}^{1}/_{5}\ PoD$ (this formula is generally accurate to about $\pm$ 20%)

Flange design gasket seating bolt load:

= 1589175.4 lb (for 36 bolts)

P_o = 44143 lbf/bolt

D = Load bearing cross sectional area of bolt

= 1.5047 ins^2

$T_{min} = {}^{1}/_{5}\ (44143 \times 1.5047)/12$

Minimum recommended Torque = 1107 ft lbs

Maximum bolt load = say 80% yield [5.6]

= 105000 x 0.8 = 84000

$T_{max} = {}^{1}/_{5}\ (84000 \times 1.5047)/12$

= 2107 ft lbs

Maximum Recommended torque = 2107 ft lbs

5.5 Refractory Selection for Gasifier Vessel

High operating temperatures in the gasification reactor made it necessary to protect the steel shell with an inner refractory lining. Discussion with Plibrico (refractory suppliers), and previous experience enabled the properties of the refractories to be defined. These are as follows:

a) Volume stable up to temperatures of 1200 C. It is known that the presence of open cracks or joints in pressurised units can result in gas tracking with accelerated rates of wear. It is, therefore, especially important that the level of shrinkage be reduced to a minimum.

b) Chemically compatible with a wide range of reducing atmospheres.

c) Chemically resistant to the residues from the products of gasification.

d) Good resistance to rapid heating and cooling.

e) Good abrasion resistance over the full operating temperature range.

Immediately, the conditions imposed by the process limit the choice of refractories. Most operators of industrial gasification systems have decided that monolithic refractory linings are preferable to brick linings. This is because monolithics have better brick thermal shock resistance, less joints and, with the new range of castables, similar abrasion resistance to fired brick shapes are achievable. However, preformed fired shapes of silicon carbide remain a serious competitor to monolithics, provided the temperatures remain low and oxidising conditions are avoided. The other advantage that preformed fired shapes have over monolithics, it is easier to control the installation of the lining.

For simplicity, the discussion on the selection of a suitable material is divided into the following three categories:

Chemical considerations
Physical considerations
General design features associated with thermo-mechanical properties

5.5.1 Chemical Considerations

Early studies by Dial [5.7], and Crowley and Wygant [5.8] on refractories for coal gasification and liquefactiion recommended the use of high alumina castable, stressing the need for low silica and iron content to resist attack by steam and CO. A later, nine-year research programme on linings for coal gasifiers carried out of the U.S. Bureau of Mines reached different conclusions. Thirty-six castables were evaluated in environments including steam, H_2, CO_2, CO and typical high-and-low calorific value gas mixtures. Exposure pressures ranged from 100 to 1000 psi, temperatures from 500 C to 1100 C for periods from 50 h to 2000 h. It was found that intermediate - alumina refractories containing 45-70% alumina with fireclay aggregates and having low purity calcium aluminate bond, gave the best service as liner materials [5.9], [5.10]. Phosphate-bonded refractories could not be recommended since the stability of the bond in steam rich atmospheres could not be accurately predicted. Refractories containing iron were found to be subject to attack by CO and CH_4 at low temperatures (800 C). The presence of ammonia, sulphur compounds, and/or steam tended to retard CO and CH_4 attack.

Kennedy and Schlett [5.11] reached a similar conclusion for a non-slagging gasifier. They recommended the use of a dense fireclay castable with approximately 50% alumina content and low iron. Satisfactory lining life was only achieved after close attention to such details as the

thickness of the backing insulation and the incorporation of vapour stops to minimise the possibility of gas channneling.

Experience in the U.S. of the influence of fuel oils on refractories includes sulphur attack. The production of SO_3 from fuels has been related to the amount of excess air in the burner. The formation of SO_3 can be presented by burning residual oil with a minimum amount of excess air. At temperatures higher than 1200 C most sulphates decompose and sulphur is thus present only as SO_3 or SO_2. At lower temperatures, sulphates will be formed. The degradation in refractories due to the detrimental interaction between refractory oxides and sulphur combustion products is generally more serious than the case of sulphur-free combustion conditions. Formation of sulphates can cause a volume change and thus generate cracks in the refractory being exposed to the reacting species offering faster transport paths for them into the refractory. The net result of sulphate formation is probably enhanced refractory degradation [5.12].

5.5.2 Physical Considerations

Traditional cement bonded castables suffer serious reductions in strength and abrasion resistance between 500 C and 1100 C. A new range of monolithic castables have been developed in recent years where these problems do not occur. These are referred to as low cement (LC) castables. These materials have good volume stability, excellent abrasion resistance and low contractions on firing in oxidising conditions. However, there is litle information on volume stability when these materials are subjected to various reducing gaseous atmospheres over long periods of time. There is some recent evidence to suggest that the atmospheric conditions and/or other factors can increase the normal firing shrinkage by 0.7% in some castables.

As stated earlier, material selection on good volume stability is a very important factor for gasification systems operating under pressure.

5.5.3 Thermomechanical Behaviour and Design

Generally, the design of monolithic structures have been developed on the basis of trial and error. In recent years understanding of their behaviour as engineering materials has considerably improved. With LC and ULC materials there is less documentation available. However, under service conditions it is known that these materials are less accommodating because they have much higher elastic moduli. There are reports where the incorrect design has been implemented with LC materials and the vessel shell has split due to high stresses. It is also possible to have a backing layer that is too weak, which alllows the hot face layer to move causing joints to open up.

5.5.4 Refractory Lining Construction for Gasification Reactor

A range of materials could be selected for installation, final choice was considered to demand a specialist input; the work was therefore sub-contracted. The detailed technical information sheets for the linings are included in Appendix 5.3. This appendix also contains the heat transmission calculations from which it may be seen that the calculated hot face (casing) temperature is below 300 C in all the examples given.

The final system choosen for installation was:

Reactor

190/195 mm Plicasto 200
150 mm Plicasto Verilite 7 R/G
13 mm 4lbs density Plisulate Ceramic Fibre (external)

Inlet Nozzles

Fitted type 18/8 stainless steel liner with annular space filled with Plisulate Blanket 8 lbs density.

Outlet Nozzles

50 mm Plicasto 200
38 mm Plicasto Verilite 7 R/G
13 mm 4 lbs density Plisulate Ceramic Fibre (external)

Figure 5.8 is a view of the upper section of the reactor prior to refractory installation. The stainless steel liner is seen being offered up to the feed inlet nozzle. In Figure 5.9 the residue discharge liner is shown in place along with a section of the refractory. Location of the lower thermowell can also be seen. The insulation was installed by casting and rolling. The hot face refractory was cast behind a wooden former to obtain a smooth finish. A 'dog-legged' joint was made at the break line and packed with 6 mm vacuum formed ceramic fibre. Figure 5.10 and Figure 5.11 shows the completed lining and 'dog-legged' joint.

Type 18/8 stainless steel 'V' anchors were fixed to the inner shell surface on 9 in centres (tack welded) to retain insulation during the casting and rolling operations. The anchors can be seen in Figure 5.8 and Figure 5.9. As the anchors were welded to the vessel after pressure test acceptance a dispensation was agreed with the insurance inspector.

5.6 Reactor Vessel Instrumentation

Vessel instrumentation was limited to:

a) Feed level detection
b) Inner reactor temperatures and
c) Reactor surface temperatures

The function of the feed level detector has been dealt with in chapter 4.0 and will not be considered further here.

Concerning b) Inner reactor temperatures need to be monitored for both process control and safety reasons. A total of 6 thermowells (thermocouple pockets) were built into the vessel to permit measurement of refractory temperatures at different depths and locations. The 1/2 in sched 160 thermowells were set on two levels as shown in Figure 5.4 and Figure 5.5. Two levels were selected in order to monitor thermal gradient through the reactor. Each well was fitted with a duplex (twin sensor) cr/al thermocouple. The thermocouple outputs were taken to a continuous chart recorder.

Regarding c) Surface thermocouples were peened into tubular housings welded to the reactor surface as shown in Figure 5.12. The locations were choosen to act as a hazard alert system and for heat balance purposes. If refractory damage was to arise with the system under pressure and at high temperature, catastropic failure could occur. The thermocouple outputs were taken to a dedicated Apple IIe microcomputer which was linked in turn to the main emergency shut down system. In the event that the preset surface maximum temperature of 300 C was exceeded the emergency system would closedown the plant and simultaneously flood the system with inert gas.

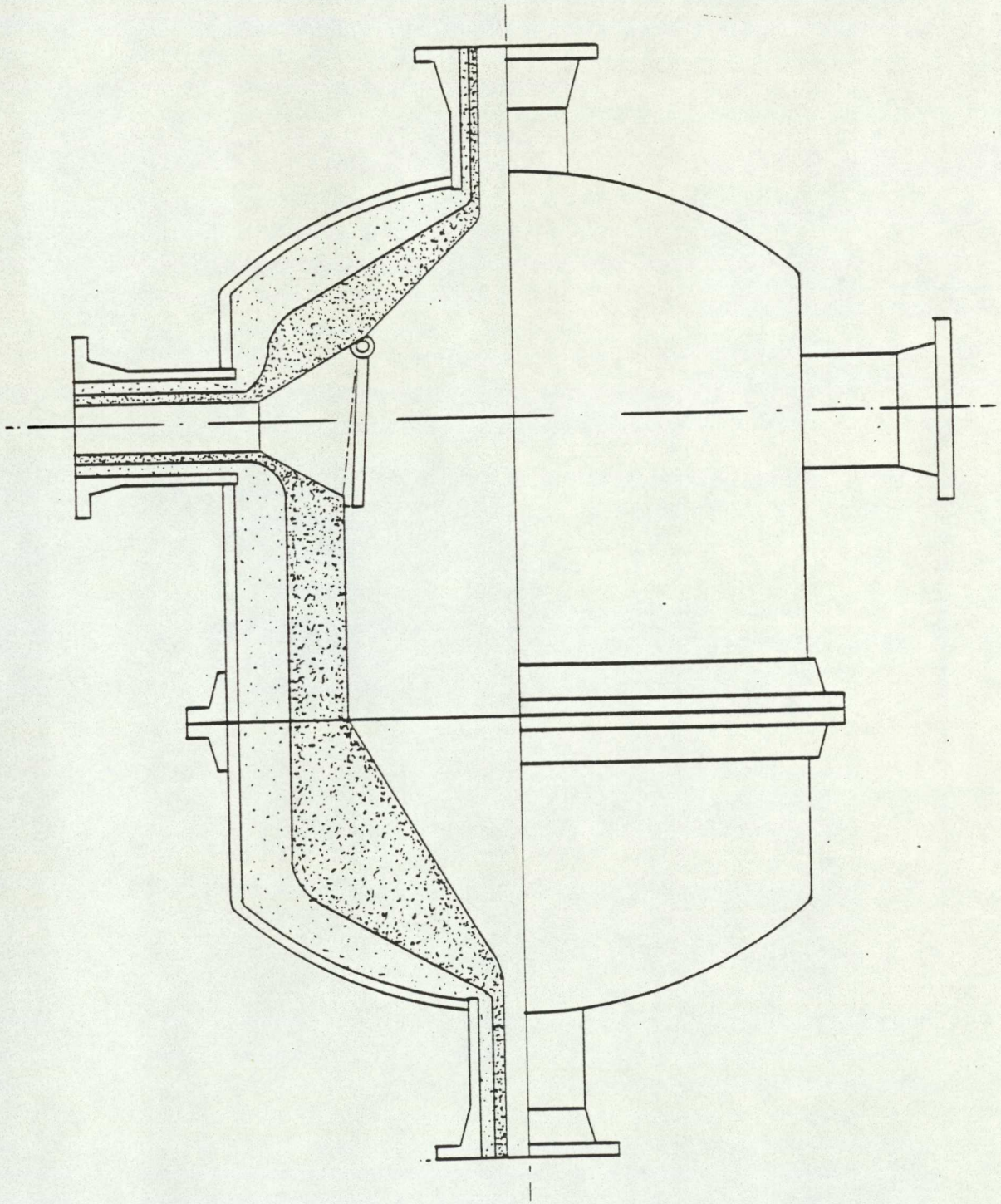

FIGURE 5.1 - TEST RIG REACTOR VESSEL CROSSFLOW

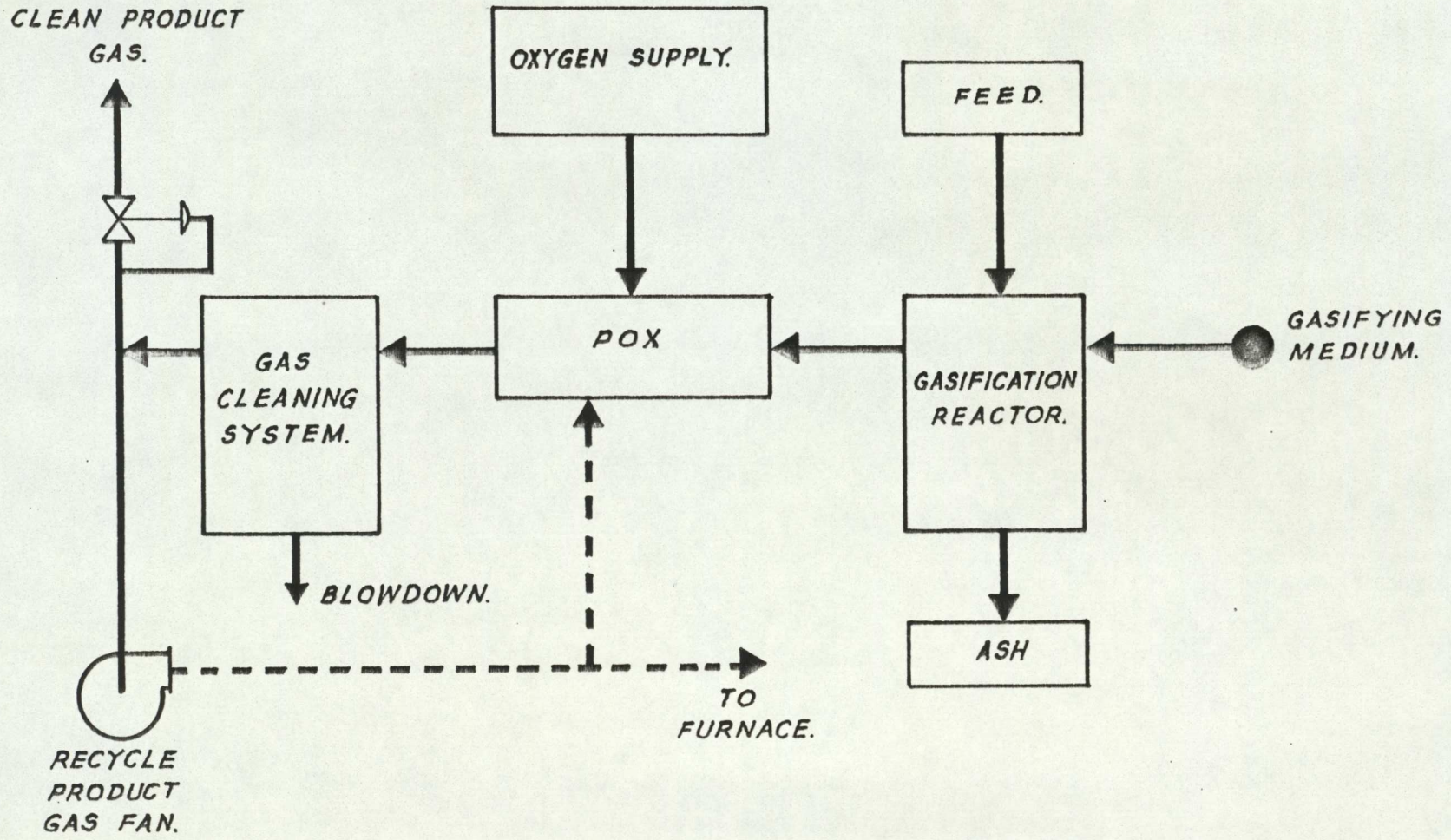

FIG. 5.2 - GENERAL PLANT ARRANGEMENT SHOWING POX.

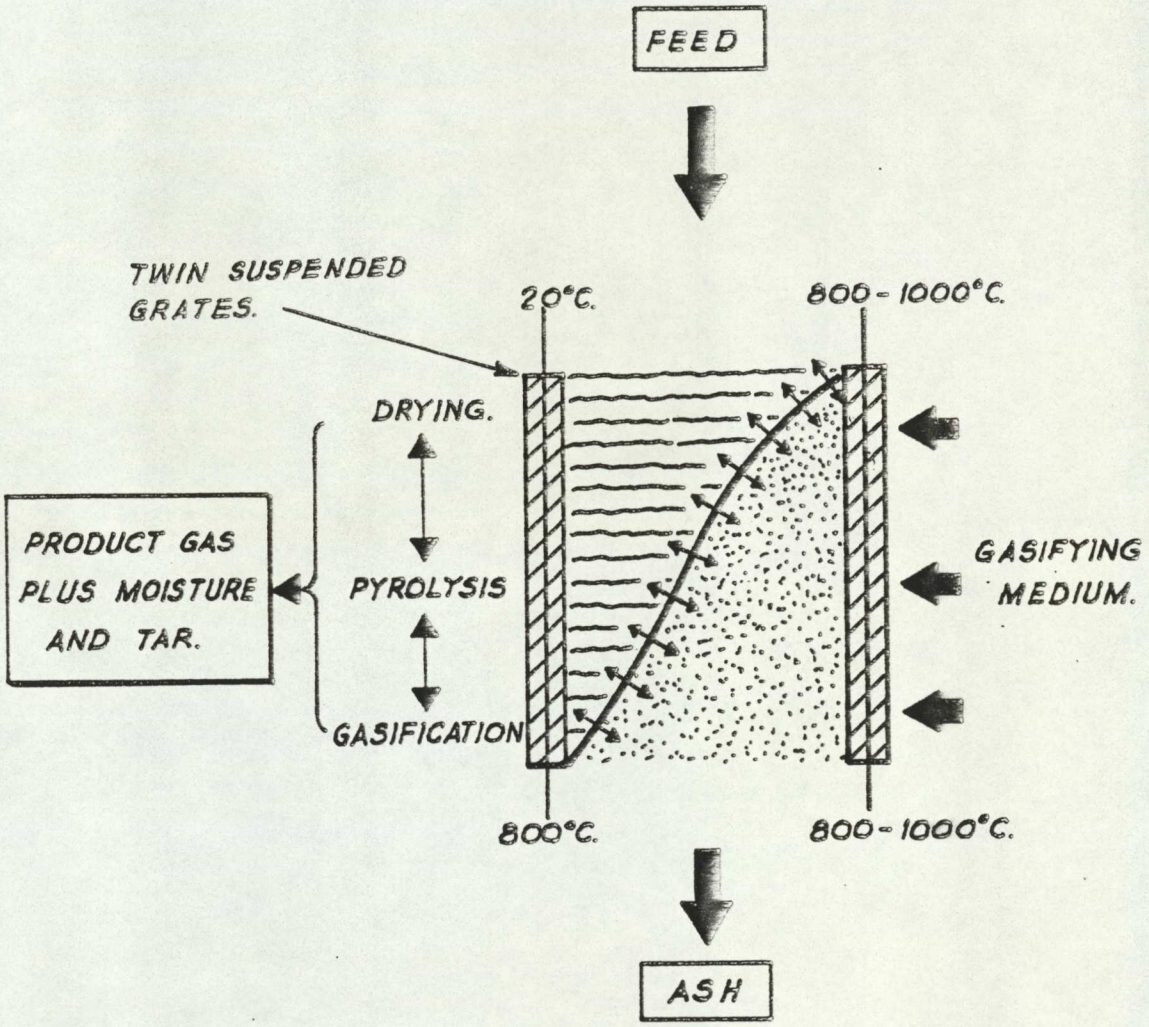

FIG. 5.3 - SCHEMATIC: CROSS FLOW GASIFIER.

Figure 5.4 Biomass Reactor No. 1

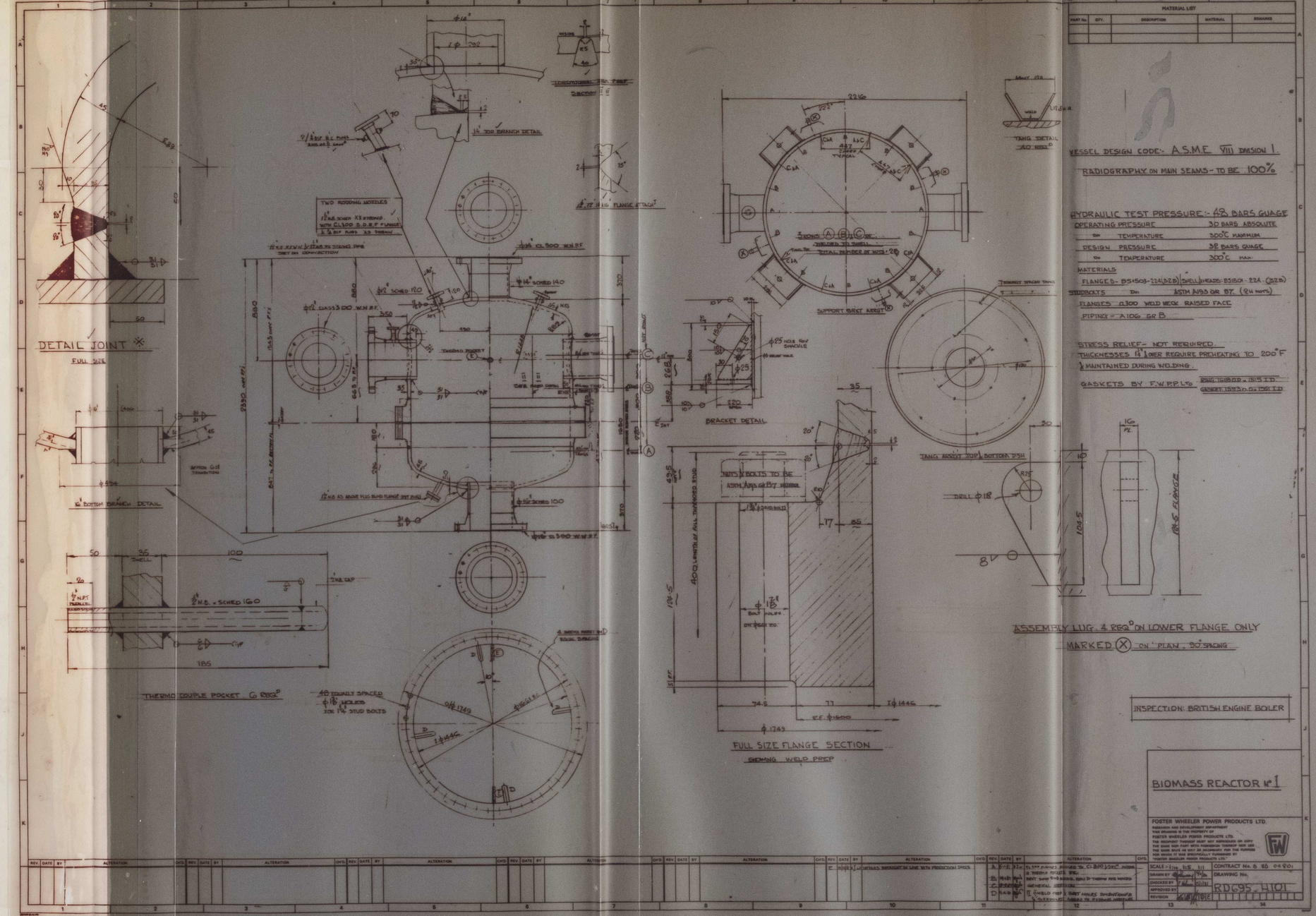

Figure 5.5 Biomass Reactor

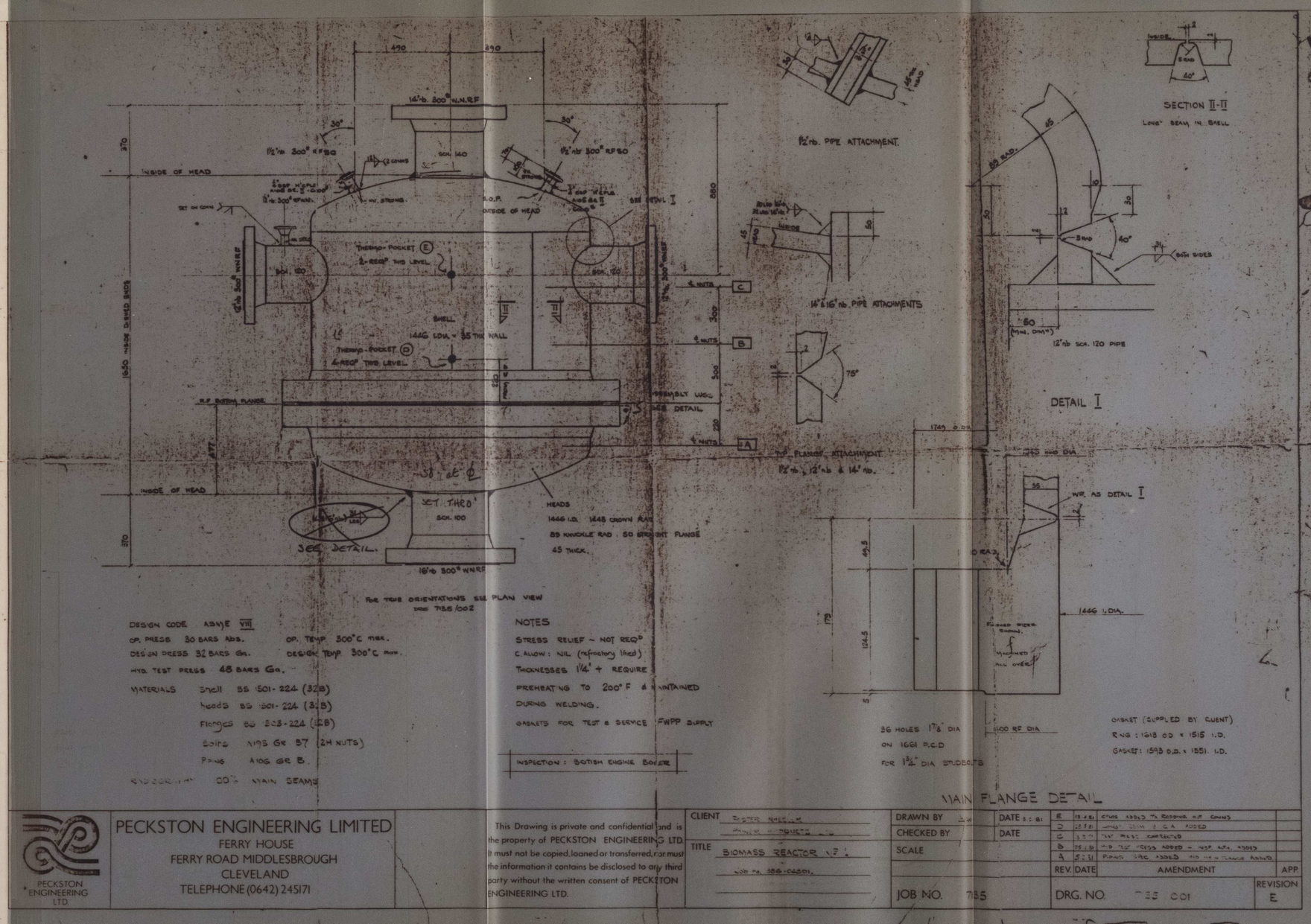

DESIGN CODE ASME VIII
OP. PRESS 30 BARS Abs. OP. TEMP 300°C max.
DESIGN PRESS 32 BARS Ga. DESIGN TEMP 300°C max.
HYD. TEST PRESS 48 BARS Ga.

MATERIALS Shell BS 1501-224 (32B)
Heads BS 1501-224 (32B)
Flanges BS 1503-224 (22B)
Bolts A193 GR B7 (2H NUTS)
Pins A106 GR B.

NDT 100% MAIN SEAMS

NOTES
STRESS RELIEF ~ NOT REQ'D
C. ALLOW: NIL (refractory lined)
THICKNESSES 1¼" + REQUIRE PREHEATING TO 200° F & MAINTAINED DURING WELDING.
GASKETS FOR TEST & SERVICE FWPP SUPPLY

INSPECTION: BRITISH ENGINE BOILER

PECKSTON ENGINEERING LTD.

PECKSTON ENGINEERING LIMITED
FERRY HOUSE
FERRY ROAD MIDDLESBROUGH
CLEVELAND
TELEPHONE (0642) 245171

This Drawing is private and confidential and is the property of PECKSTON ENGINEERING LTD. It must not be copied, loaned or transferred, nor must the information it contains be disclosed to any third party without the written consent of PECKSTON ENGINEERING LTD.

CLIENT
TITLE BIOMASS REACTOR N°1
JOB No. 735-0420.

DRAWN BY DATE 3.8.81
CHECKED BY DATE
SCALE
JOB NO. 735
DRG. NO. 735 C01
REVISION E

REV.	DATE	AMENDMENT	APP.
E	19.8.81	GUSS ADDED TO REDUCE NO. COATS	
D	12.8.81	WELD DIM. 1 C.A. ADDED	
C	5.7.81	FOR MECH. CONSTRUCTION	
B	25.6.81	H.D. TEST PRESS ADDED + N.D.E. NOTE ADDED	
A	5.5.81	PIPING SPEC ADDED, PIN ON FLANGE ADDED	

PRESSURE VESSEL DESIGN ASME VIII DIV. I

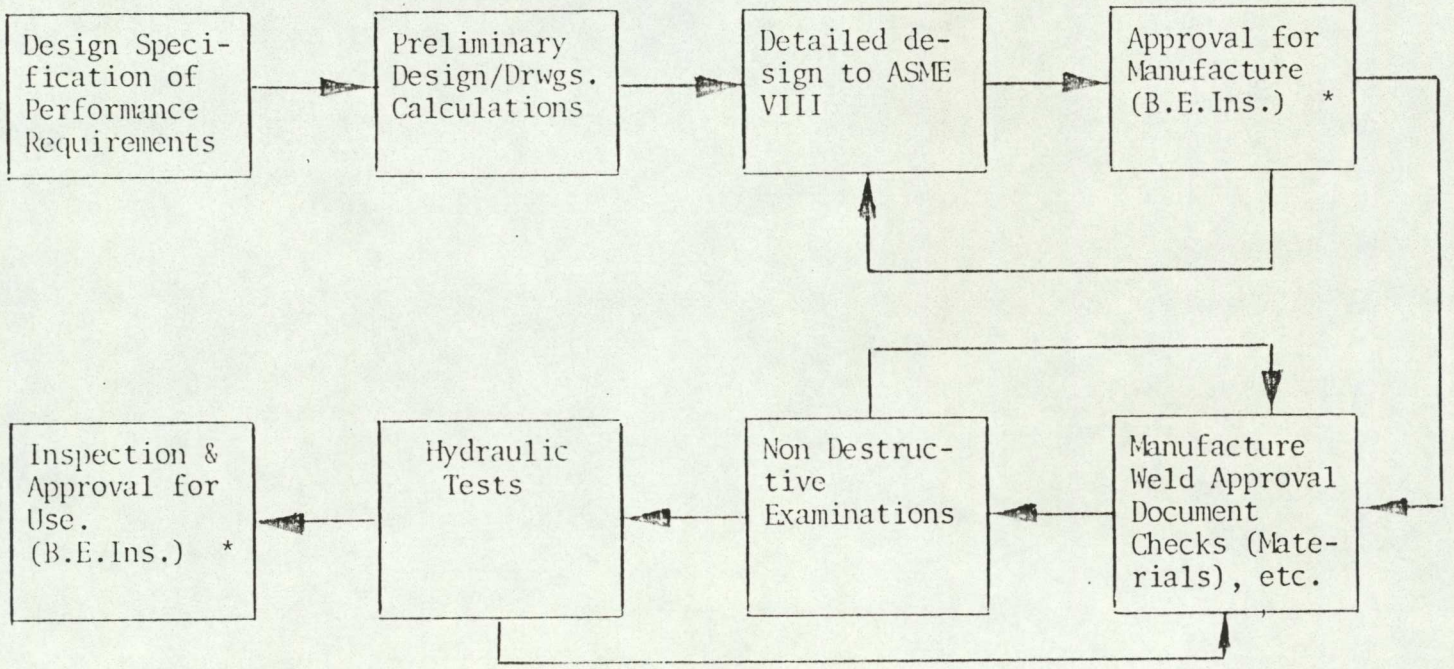

FIGURE 5.6 - GASIFIER VESSEL DESIGN FLOW DIAGRAM (With Feed Back)

* British Engine Insurance Co.

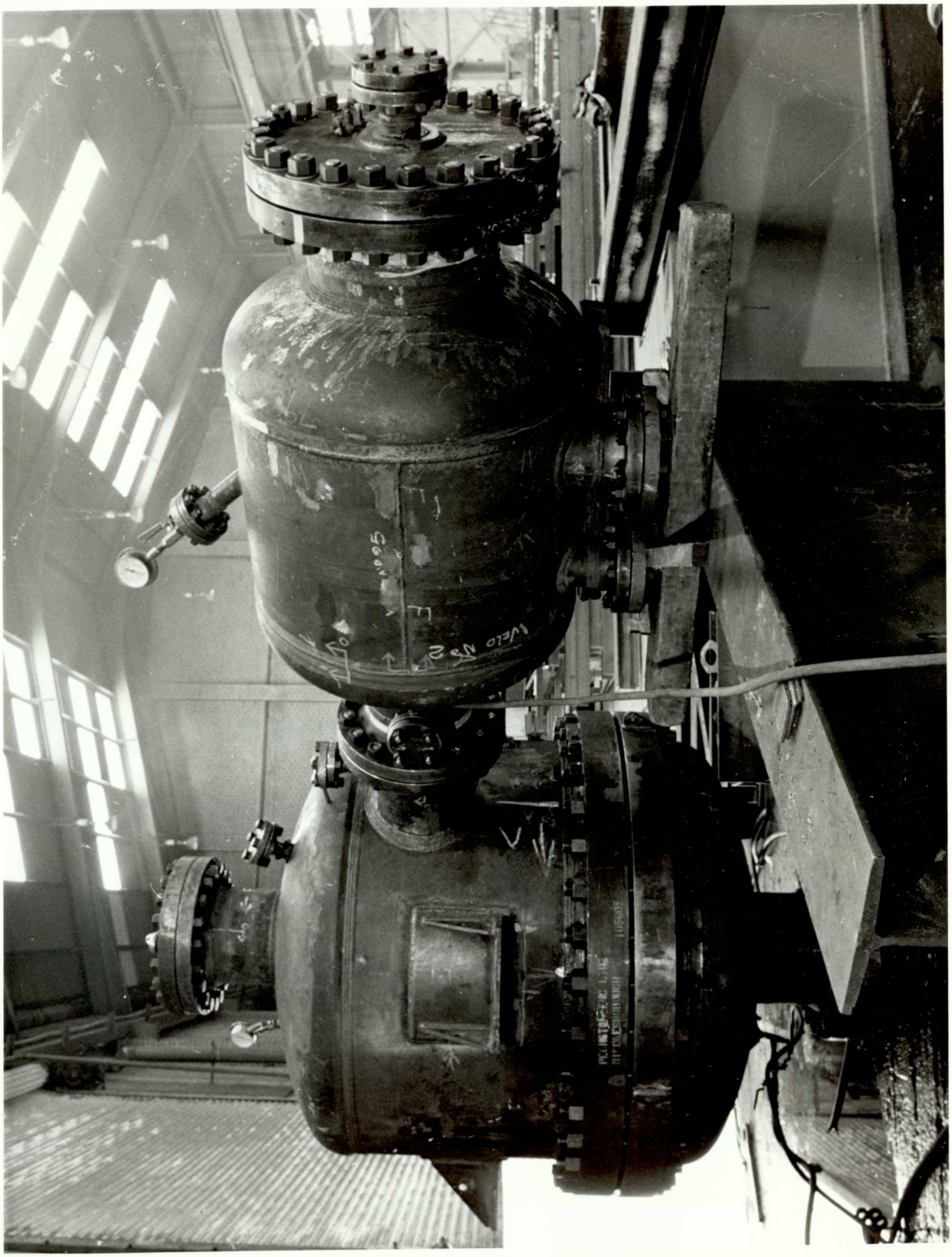

Figure 5.7. Main reactor and furnace vessels under-going hydro test.

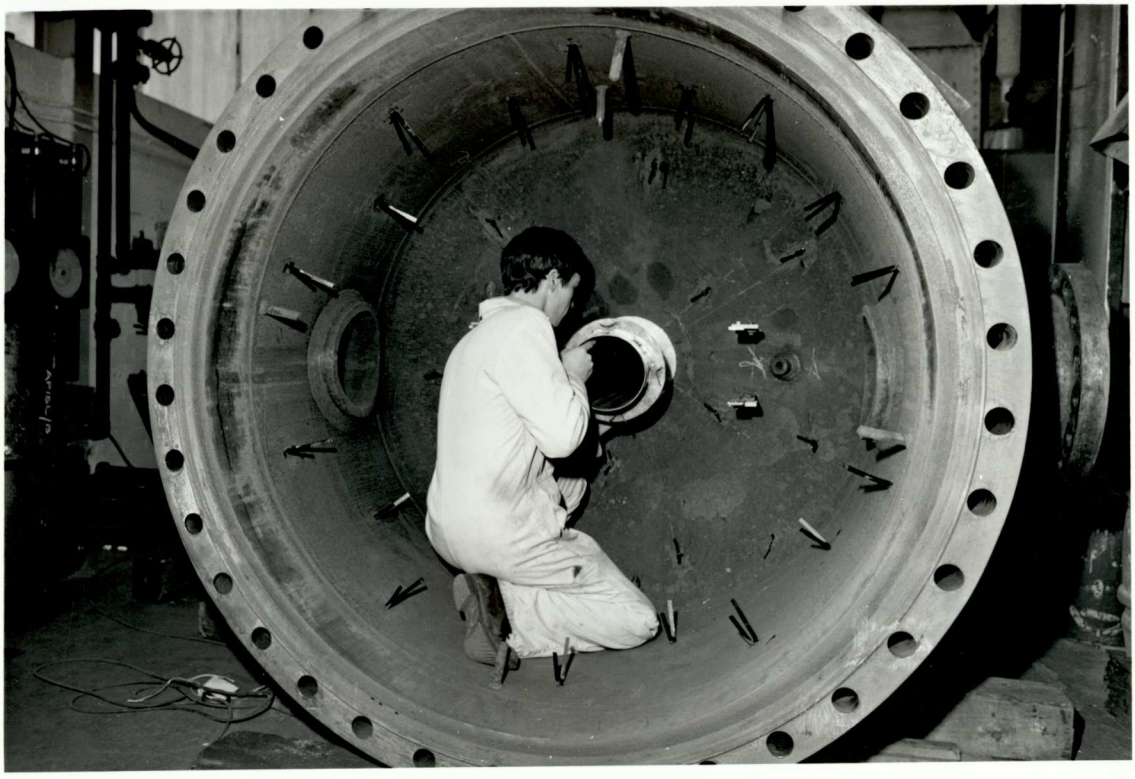

Figure 5.8. Main reactor upper section showing sleeve installation.

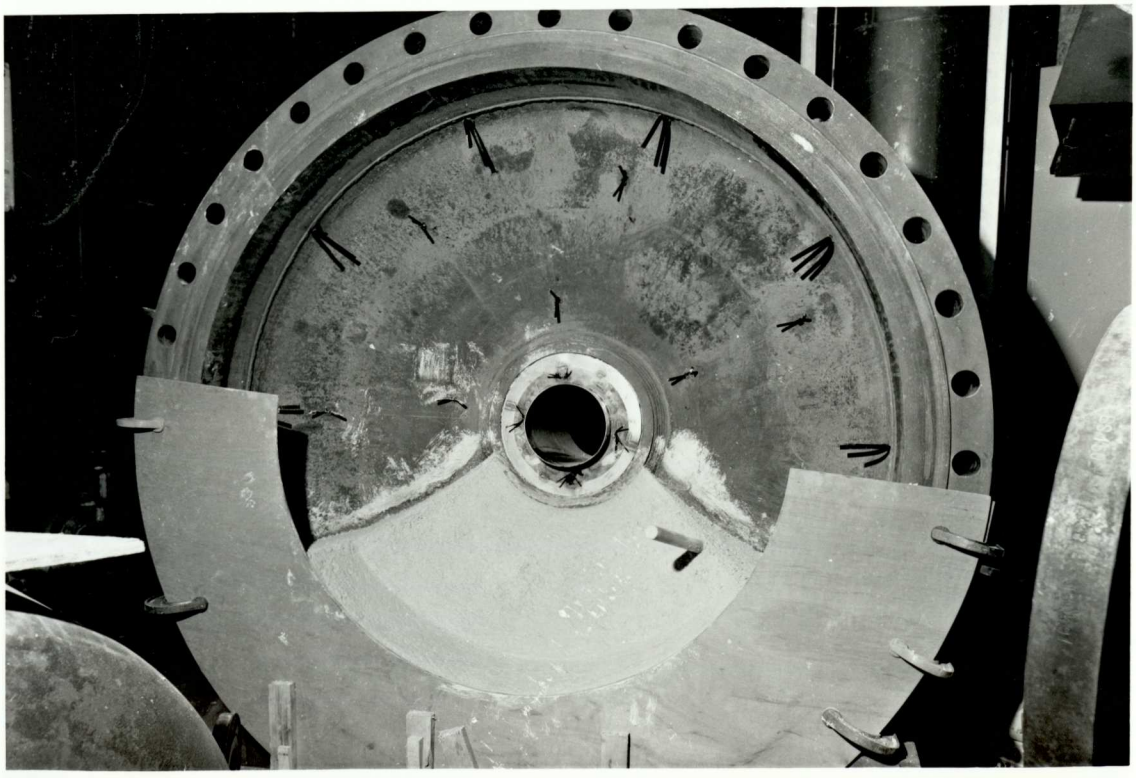

Figure 5.9. Main reactor lower section showing lining shuttering and exit sleeve.

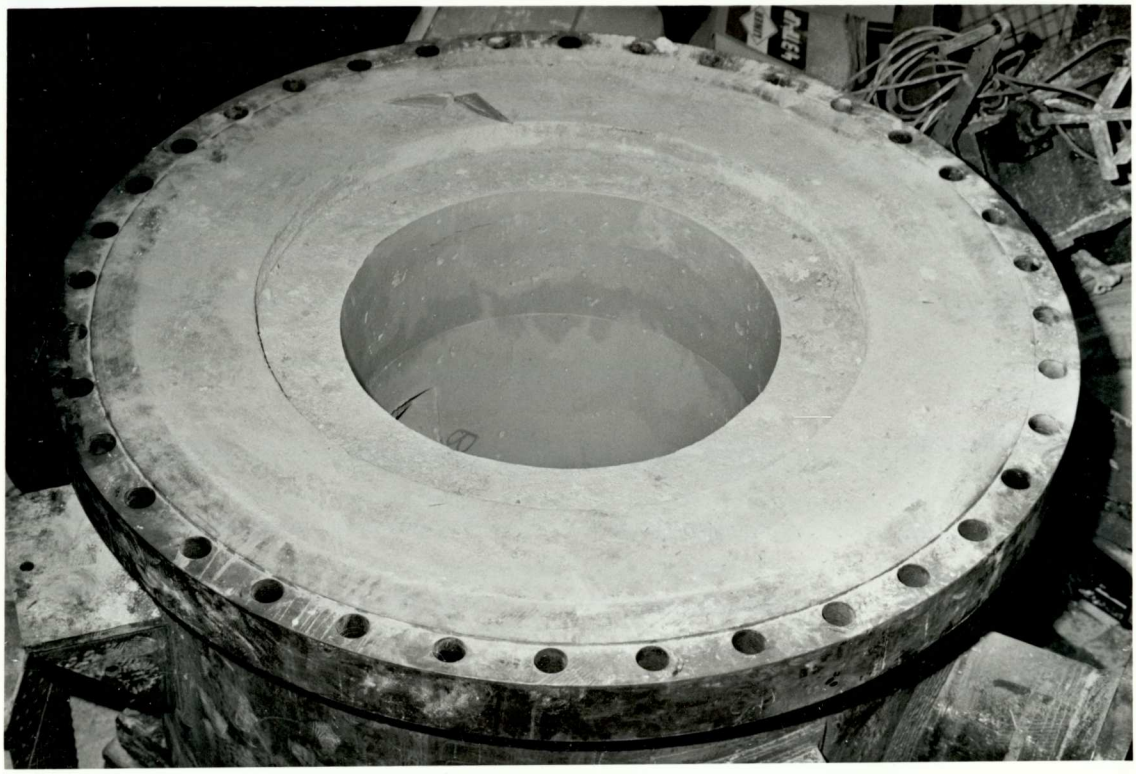

Figure 5.10. Main reactor upper section showing lining step.

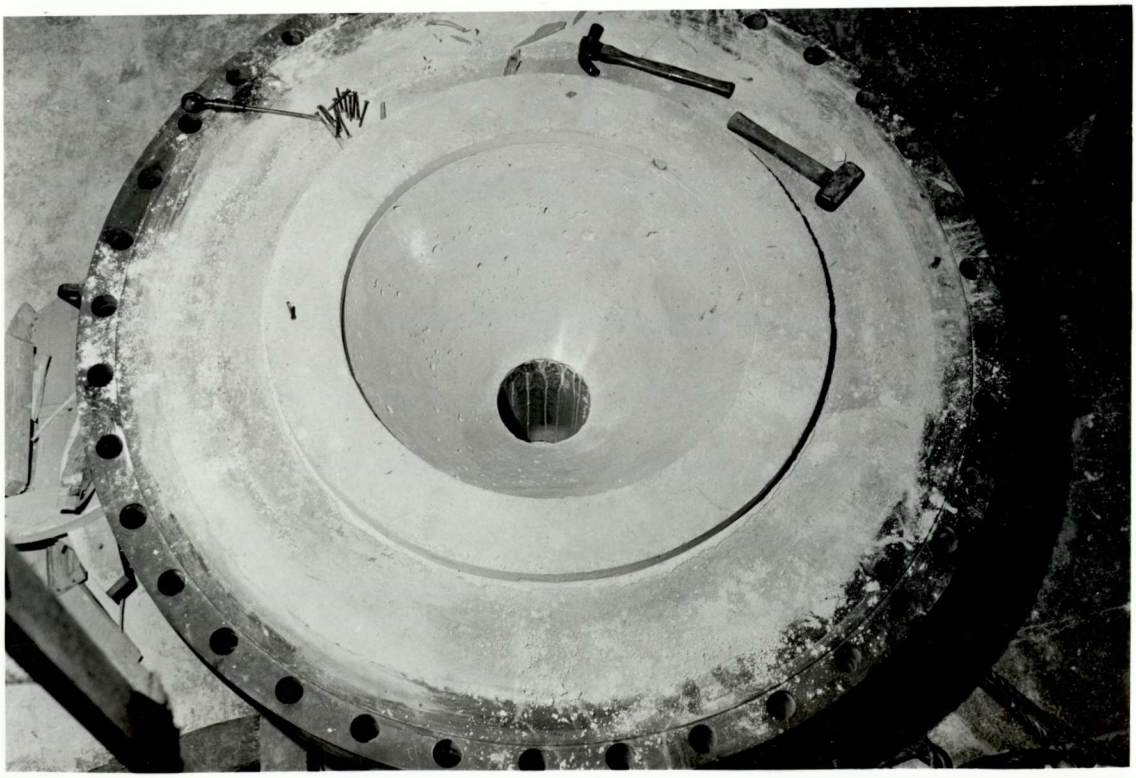

Figure 5.11. Main reactor lower section showing lining step.

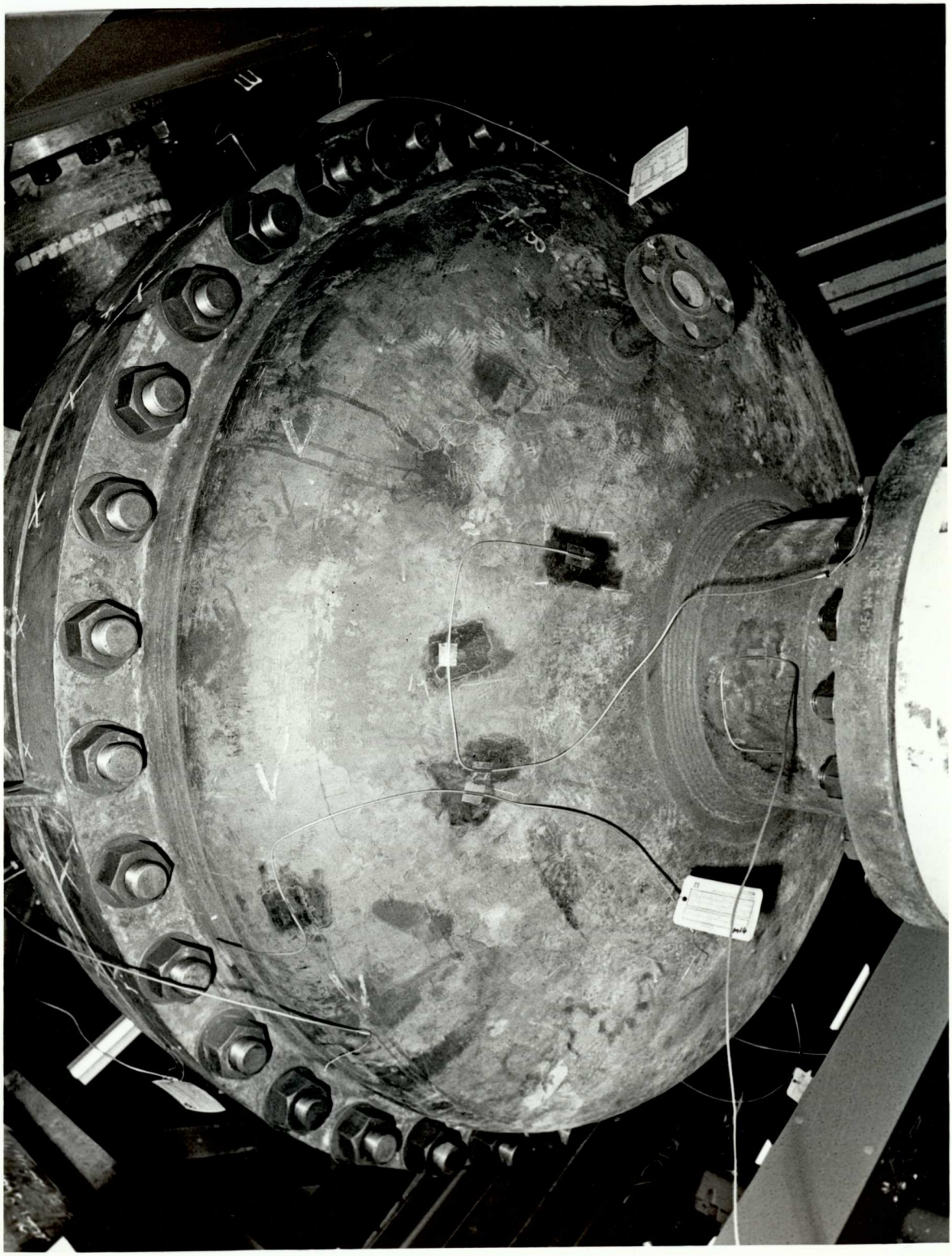

Figure 5.12. Underside of reactor vessel showing thermocouple location.

6.0 PARTIAL OXIDATION REACTOR

6.1 Background

As noted in chapter 5.0, the extensive operating experience with the cross-flow pyrolysis reactor led to the decision that the first reactor to be employed in the gasifier test programme would be based on the cross-flow principle. This decision offered the immediate advantage of equipment familiarity, when moving into the relatively unknown and potentially hazardous area of combined high pressure and high temperature gasification.

A disadvantage of the cross-flow mode in gasification terms, is that the product gas stream can contain large amounts of tar and moisture (depending on feed characteristics and reactor conditions) due to the high temperature gradient as shown in Figure 5.3. It was therefore decided to install a Partial Oxidation Reactor (POX) downstream of the main gasifier vessel to oxidise, crack and/or reform the tars and thereby improve the yield of CO and H_2 in the product gas. In addition, some of the fine char entrained and carried out of the gasifier by the product gas stream, would also be gasified.

It should be noted that the basic chemical and kinetic principles upon which the detailed engineering design of the POX was developed were studied by Aston University personnel acting in a collaborative role with the Author [6.1],[6.2]. The division of activity was that Aston undertook fundamental work, whilst the author translated theoretical findings into engineering design and eventual construction.

6.2 Specification

The POX was sited downstream of the main gasifier vessel and located between the main gasifier product gas outlet nozzle and the gas cleaning system inlet nozzle. It

performs as a transport reactor, transferring the product gas with tar and vapour between the two units when oxygen air or steam is injected into the gas stream.

Part of the product gas emerging from the gas cleaning system must be recycled to the POX for cooling the gas and/or quenching on-going chemical reactions (this is discussed in chapter 7.0). The general plant arrangement was shown in Figure 5.2. When no oxygen injection is required, the POX acts as a linking conduit between the gasifier and the gas cleaning system. The operating specification is given in Table 6.1 below.

TABLE 6.1

Specification of the POX Reactor*

Variable			Notes
Design code	:	ASME VII Div I	
Operating pressure	:	2-30 bar g	As specified for gasifier trials.
Design pressure	:	30 bar g	
Maximum operating temperature	:	1000-1500 C	Gasifier Products less than 800 C (typically)
Maximum metal temperature	:	300 C	
Residence time	:	0.01-1s	Inadequate data available (UoA)
Product gas flowrate into POX (maximum)	:	0.54 m^3/s	At 800 C and 1 bar g
Oxygen (maximum)	:	1.7 kmol/h	Raise gas temperature to greater than 1000 C
Steam (minimum)	:	40kg/h	Flowrates to gasifier variable 40-160 kg/h depending on pressure.

* Amended from [6.1]

6.3 Evaluation and Options

Four alternative POX configurations were examined:

1) **Fluidised Bed Reactor (FBR)** :**Figure 6.1**
2) **Tubular Reactor (TR)** :**Figure 6.2**
3) **Sub-stoichiometric Gas Burner (SSB)** :**Figure 6.3**
4) **Venturi Reactor (VR)** :**Figure 6.4**

The key comparative features of these alternatives are summarised in Table 6.2 below.

TABLE 6.2
Comparative Features POX Alternatives

	Alternative			
Feature	FBR	TR	SSB	VR
Simplicity	X	X	?	Y
Low cost	X	X	Y	Y
Flexibility	X	X	Y	Y
Catalyst option	Y	X	X	Y
High pressure	?	Y	?	Y
High temperature	Y	Y*	Y	Y
Steam injection	Y	Y	Y	Y
Oxygen injection	Y	Y	Y	Y

* Limited high pressure due to stress-rupture hazard.

KEY X:Negative Y:Positive ?:Uncertain

It can be seen from Table 6.2 that only the VR POX satisfied all the specified system requirements. As a result of this, plus the fact that the system is unique (see Appendix 2.5), offering the potential for commercial exploitation, it was selected.

6.4 Detailed Design

The preliminary POX design is shown in Figure 6.5. The unit was manufactured by a specialist subcontracter because of its small size.

The VR POX derives its name from the incorporation of a special cast Zirconia (mullite) quarl into the refractory lining. This forms a venturi in the main gas conduit of the POX. Gas exiting from the gasifier reactor nozzle is constricted as it flow through the venturi and immediately downstream of the throat, contacts the oxygen. The oxygen is radially injected into the quarl through an integral cast series of hollow refractory 'needles'. Details of the Quarl construction are shown in Figure 6.5 and Figure 6.6. The throat constriction is important in two respects:

1) At high pressure, the specific gas volume is low, and therefore so are velocities in the the main conduit. The reduced quarl throat area (approximately 25% of the main conduit area) helps to achieve intimate contact of the product gas with the oxygen at elevated pressures by causing a velocity increase of approximately 4:1.

2) The mixing time for the oxygen and product gas is reduced, providing a longer residence time for the reaction products in the POX which enhances conversion.

Figure 6.7 shows the general sub-system arrangements incorporated to support safe and efficient operation of the POX. The individual elements are described in the following sections.

6.4.1 Reactor Size

Very little is known about the chemistry and kinetics of tar decomposition reactions which may take place in the POX due to the complexity of the chemical reactions which

arise. The only parameter which can be roughly estimated is the residence time. This can be very short, less than 0.01s at temperatures of 1300 C to 1 s at 1200 C [6.1]. The residence time increases with pressure due to the lower specific gas volume.

Because of space restrictions in the test building the overall length of the POX was limited to approximately 2 m between flanges. It was decided that the conduit diameter of the POX should be identical with that of the gasifier exit nozzle and the inlet nozzle to the gas cleaning plant, see Figure 6.5. This resulted in a conduit diameter of 153 mm (6"), giving a cross-sectional area of 0.0182 m^2. The POX shell diameter was selected after discussion with the refractory suppliers who undertook the thermal transmission calculations which determined minimum thickness necessary to maintain the wall temperature at the design maximum of 300 C (See Appendix 5.3).

6.4.2 Oxygen Injection Arrangement

Oxygen is supplied to the plant from a manifolded bottle bank (see chapter 11) and delivered to the POX by the system shown in Figure 6.8. The potential hazards associated with use of oxygen (disscussed in chapter 13.0) are reduced by ensuring fully controlled delivery. A key-lock security valve requires to be unlocked to admit oxygen to the plant.

Oxygen is fed into the POX quarl by the arrangement shown in Figure 6.6. The quarl block is set into the refractory lining, approximately 200 mm from the product gas inlet flange. It has a circumferential distribution groove approximately 6.3 mm (1/4") wide and 6.3 mm (1/4") deep, positioned in line with the quarl throat (maximum solid section). A series of eight hollow 'needles' 4mm (0.16") in diameter are spaced equi-distant around the circumference, passing from the distribution groove and emerging approximately 25.4 mm (1") down stream of the

quarl throat. The oxygen flows through these needles into the quarl.

To ensure no migration of oxygen between the refractory lining and the POX shell, the oxygen is delivered to the ditribution groove through a supply probe. The 6.3mm diameter (1/4") heat resistant probe, manufactured in type 316 SS, is fitted with a type 316 SS bellows unit to accomodate thermal expansion. The discharge end of the probe has a taper section to engage the distribution grove, it also has two 4 mm diameter opposed holes in the lower (tapered) end to facilitate oxygen delivery. The upper end of the probe is welded to a 1mm (0.04") thick SS plate 76.2 mm (3") diameter, which is captured by the oxygen inlet nozzle flange.

A total of seven surface thermocouples are welded to the POX shell in a staggered array, to detect temperatures changes on the POX shell during plant operation. The thermocouple outputs are recorded for retrospective heat loss measurements and to check refractory lining integrity.

6.4.3 Refractory Lining of the POX Vessel

Refractory lining of the POX was undertaken by a nominated subcontractor in accordance with the operational specification provided (Table 6.1). As for the furnace vessel, thermal calculations and lining specification was undertaken by the sub-contractor. A two-part lining was installed in the POX, which consisted of a 150 mm thickness of a high density, castable 'Hot Face' refractory, Plicasto 31 R and a further 75 mm thickness of a low density castable 'backup' insulation, Plicasto 20 G. The inlet nozzle (12 in N.B. schedule 80) to the POX was lined with a 25 mm thickness of Plicasto 31 R on the 'Hot Face' and a further outer 50mm layer of Plisulate 1260 up to the shell wall. The downstream gas sample nozzle (2 in N.B. schedule 160) samples gas at up to 500

C, was lined with Plicast 200 leaving a 12mm diameter tube for the sample path. Shell refractory was held in place by screwed 'Y' anchors in type 321 material (specified by refractory sub-contracter). These were located in nuts welded to the inner surface as shown in Figure 6.10. The height was selected so as to penetrate at least two-thirds into the hot face. They were mounted such that two are attached (diametrically opposed) every 300 mm, each being set at 90 deg to the adjacent sets. The lining was installed with no construction joints directly through to the shell wall. Discussion on refractory selection was given previously in Chapter 5.0 and Appendix 5.3.

Due to the restricted access inside the POX shell and the need for good quality control in lining the unit, all the refractory installation was undertaken at the sub-contractors site. The sub-contractor also installed the Zirconia quarl.

6.4.4 Downstream Gas Cooling

The product gas is cooled in two stages (i) within the POX and (ii) by the gas cleaning system. The latter case (ii) is dealt with in chapter 8.0 and will not be considered here. Downstream gas cooling in the POX is undertaken by injecting cold clean recycled product gas from the outlet of the gas cleaning plant to a recycle gas inlet nozzle located 450 mm (17.7") from the POX discharge flange. This is shown in Figure 6.5. The inlet cooling nozzle was offset from the POX centreline by 24.4 mm (1"). The offset results in the recycled product gas entering the POX conduit tangentially, imparting a slight 'cyclonic' swirl. The cooler gas is initially in contact with the conduit wall, with the downstream POX product gas, tending to form a hot core. This will result in a lower wall temperature compared with direct mixing.

The inlet nozzle to the gas cleaning system was not thermally insulated, because the low POX exit temperature

(less than 500 C) permitted a simple stainless steel fabrication. The average temperatures of the cooled gas emerging from the POX is anticipated to be normally below 300 C. A temperature indicator switch (TIS) was located down stream of the POX as shown in Figure 6.7. This thermocouple /switch serves three functions:

a) continuous measurement of temperature at the POX exit

b) allowing the temperature at the POX exit to be set by adjustment of the cold clean gas recycle rate and

c) provision for automatic rig shut down in the event that the maximum design temperature of 500 C is exceeded at the POX exit

The thermowell assembly housing the TIS was screwed into a 3/4" NPI penetration in the POX shell. It was offset from the vertical axis by 30 deg to avoid interference with the recycle gas nozzle flange and instrument nozzle.

6.4.5 Ignition Electrodes

The ignition electrode assembly located downstream of the quarl is shown diagramatically in Figure 6.9 and 'in-position' within the POX, prior to refractory installation, in Figure 6.10. The assembly was installed to ensure that no free (unreacted) oxygen could circulate through the system and form a potentially explosive mixture. Prior to introducing oxygen, the ignitor would be switched on, causing an electric arc to strike between two of the three electrodes. The arc acts as an ignition source in the event flammable gas is present. The third electrode is a Landis and Gyre ionisation probe which is used to confirm that an arc is present. Immediately downstream of the triple electrode assembly a thermocouple senses and transmits local temperature to the plant recording equipment (see chapter 12.0). Each of the electrodes is set into the shell with low-leak 'Gulton'

compression pipe sealing glands.

The igniter head is shrouded by a fabricated steel enclosure to protect personnel from electrical shock and also isolate a potential (external) ignition source. The enclosure is connected to the inert gas purge line and is fitted with a scavange bleed valve which discharges to atmosphere.

6.4.6 Catalysts

As Figure 6.5 shows, the POX design allows the double flanged connecting spool between the gasifier gas outlet nozzle and the POX inlet to be unbolted and slipped clear. This permits the POX to move towards the gasifier by 325 mm (12.8") so that a catalyst basket can be inserted at the discharge end of the POX. (Note: The POX would be supported from its centre lifting lug and all flange connections broken). Some of the catalyst types which could be tested are carbon; alumina-silica; wood ash and alkali salts, possibly with carbon or char [6.3]. If an endothermic reaction occurs, the recycle gas rate would be increased to reject the added heat.

6.4.7 Monitoring Reactor Performance

Provision was made for measuring pressure and temperature at three points along the length of the POX reactor by mounting flanged nozzles :

a) upstream of the O_2 injection nozzle
b) 200mm (7.9") from the POX discharge flange (see Figure 6.5)
c) following the recycle gas inlet

Gas samples can be taken from the first two of these locations. The completed POX is shown in Figure 3.8 awaiting installation.

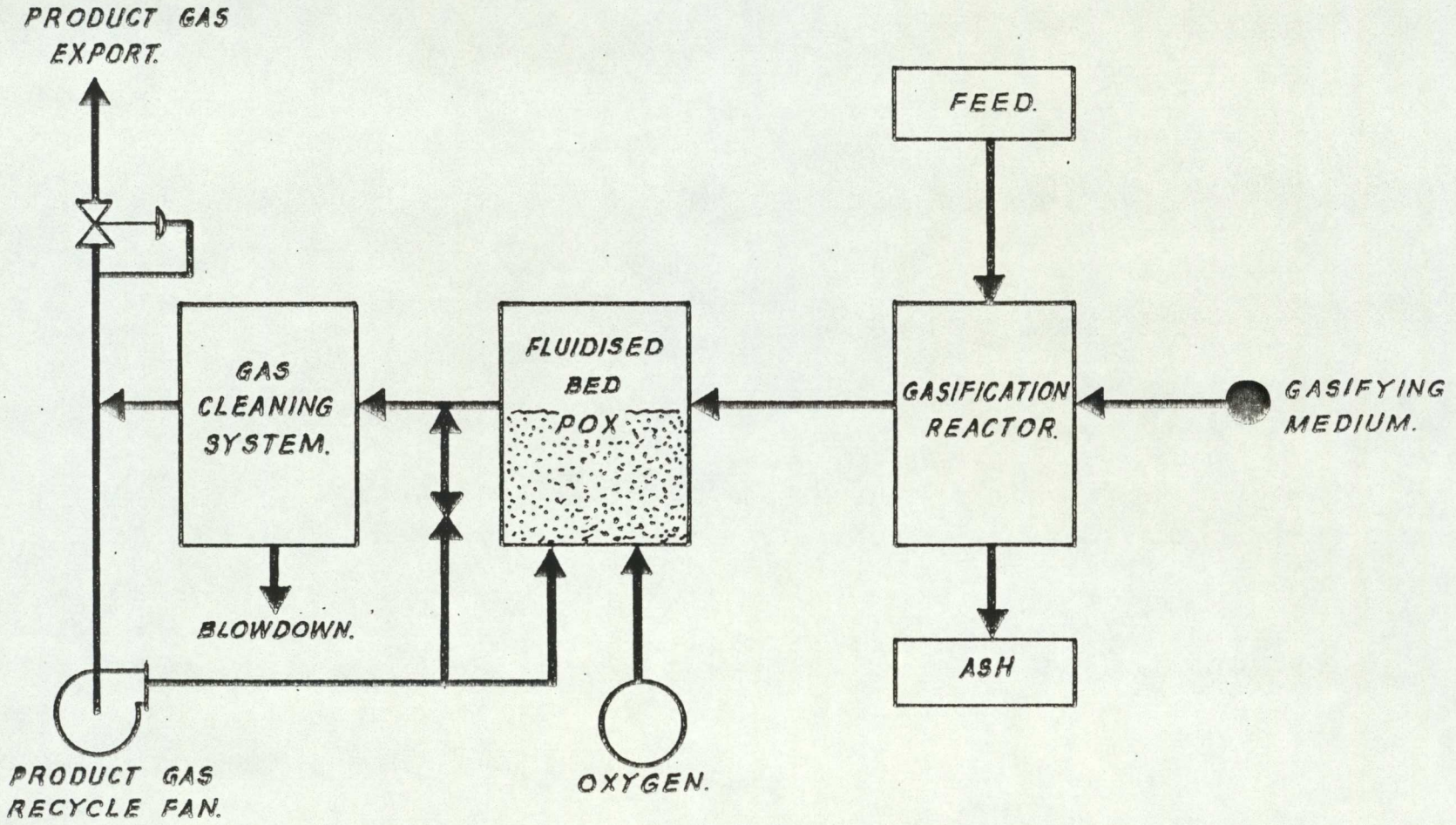

FIG. 6.1 - FLUIDISED BED POX.

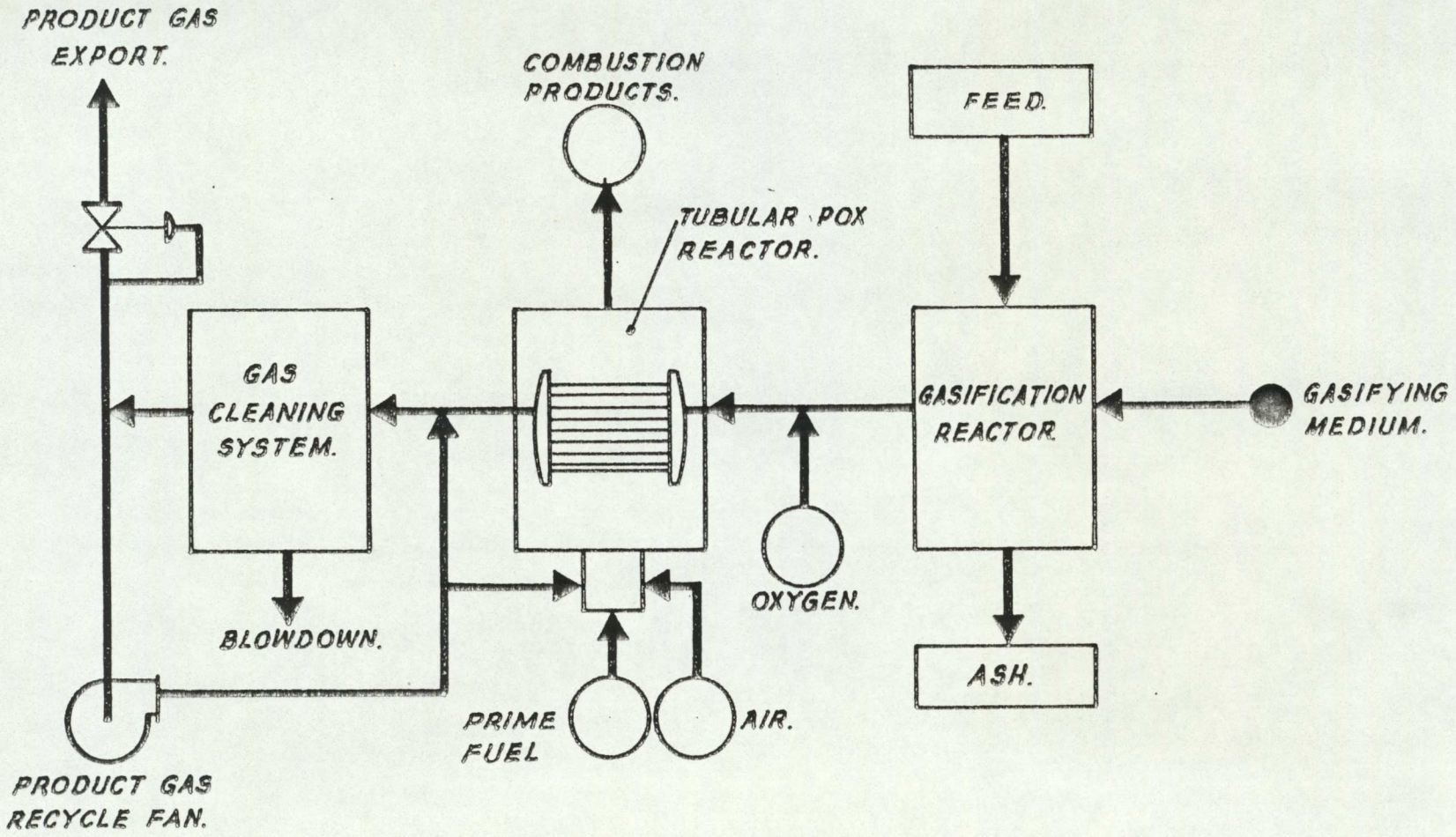

FIG. 6.2 - TUBULAR REACTOR

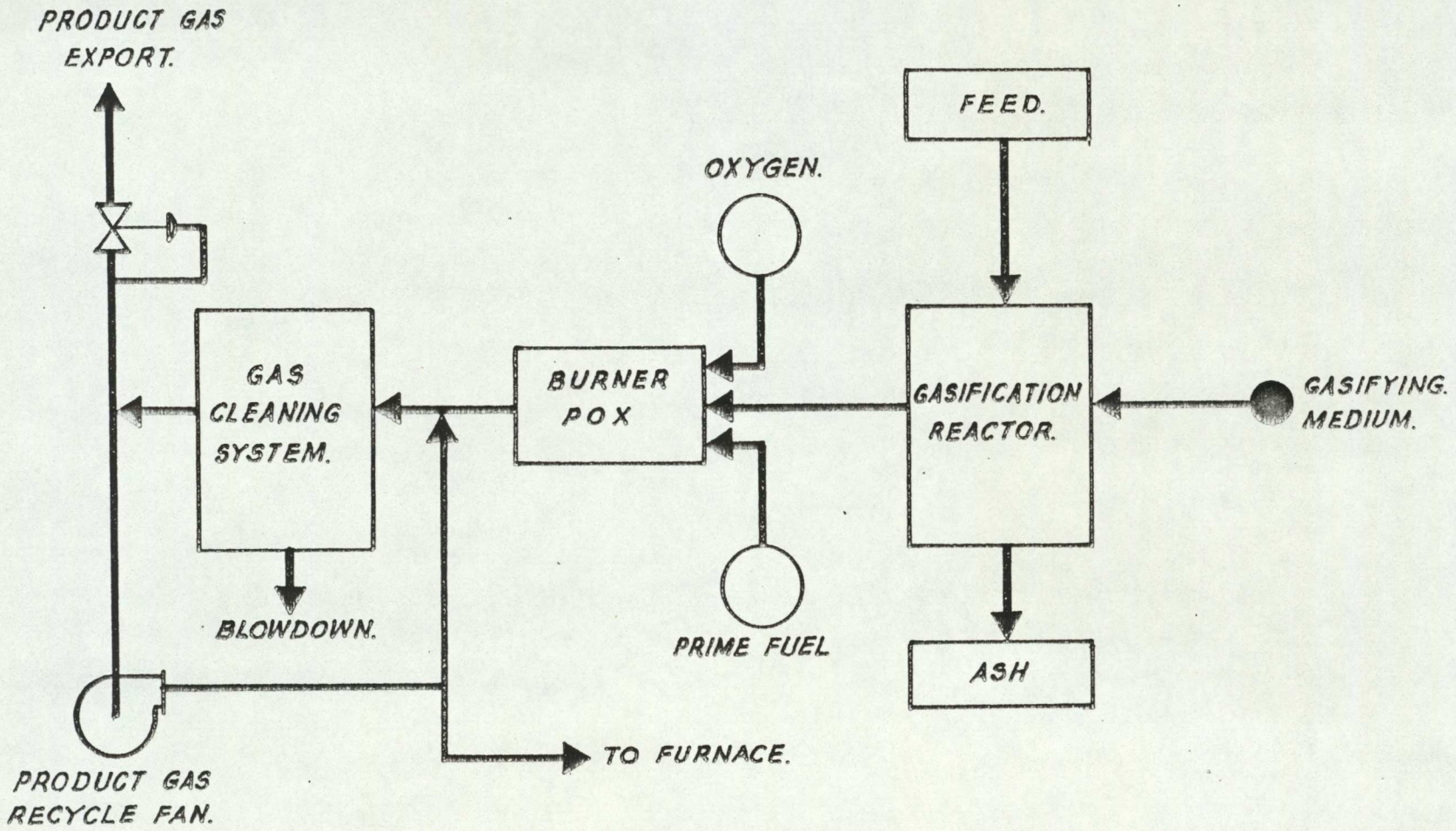

FIG. 6.3 - SUB-STOICHIOMETRIC BURNER.

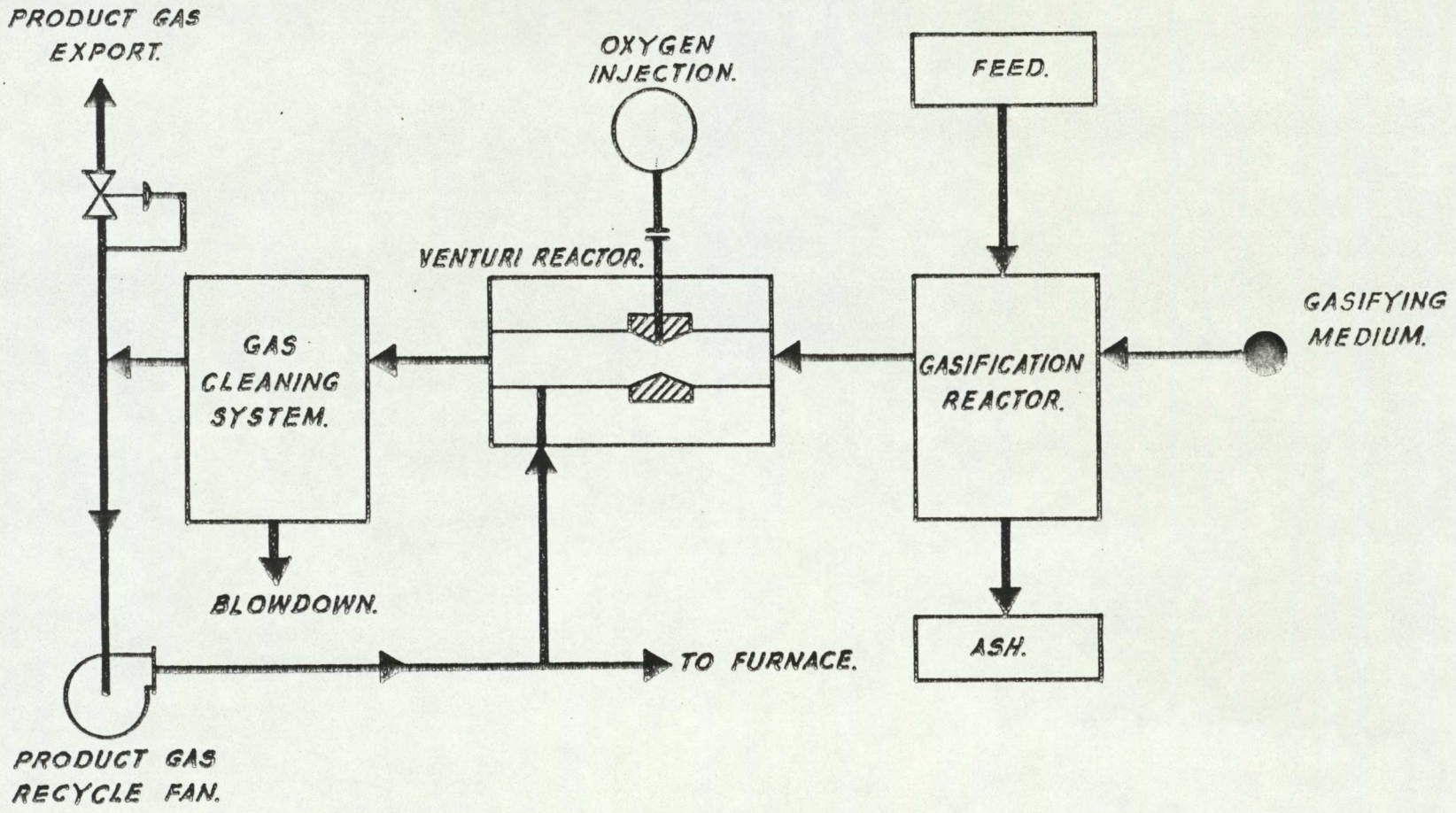

FIG. 6.4 - VENTURI POX REACTOR.

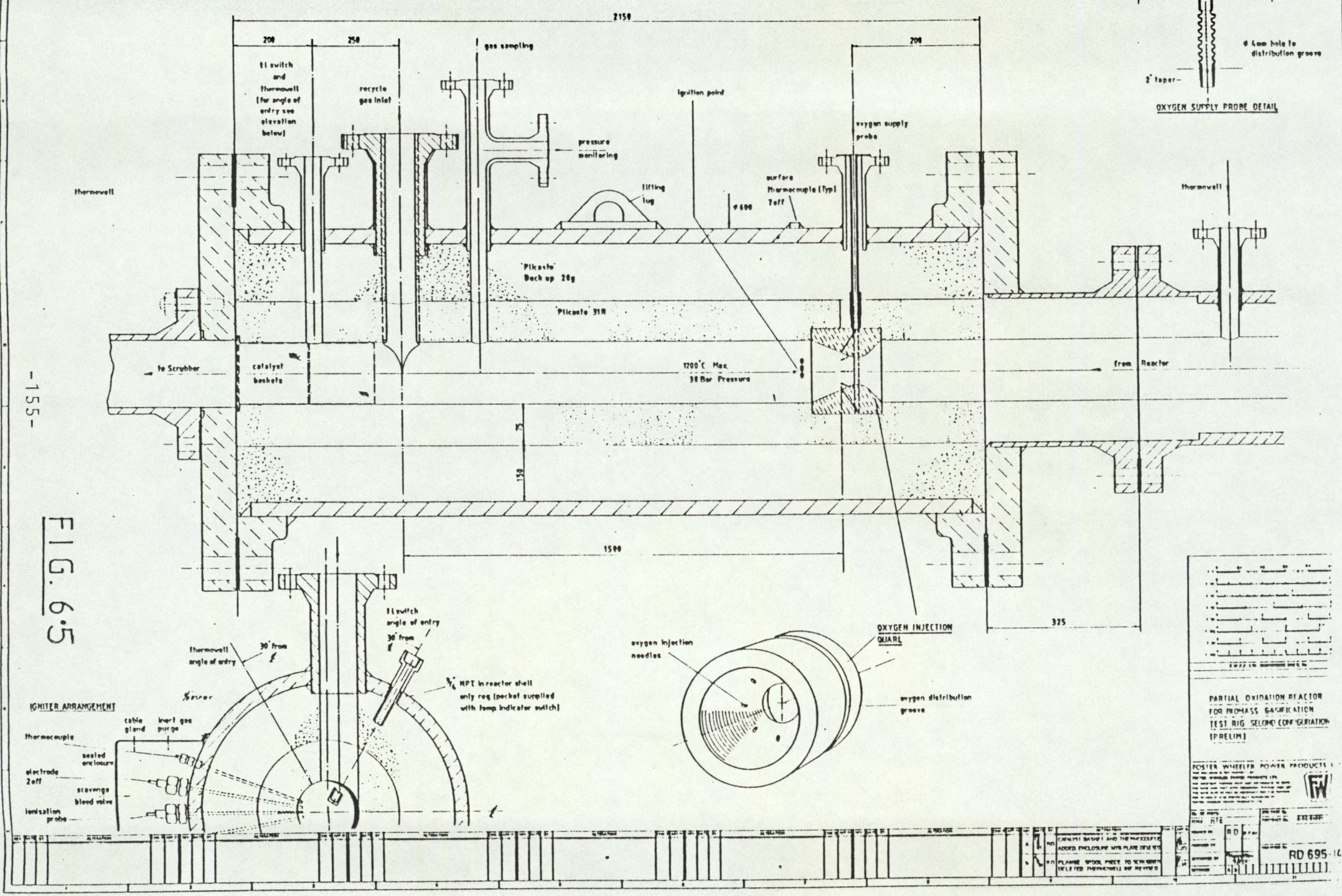

FIG. 6.5

PARTIAL OXIDATION REACTOR FOR BIOMASS GASIFICATION TEST RIG SECOND CONFIGURATION (PRELIM)

FOSTER WHEELER POWER PRODUCTS

RD 695-1C

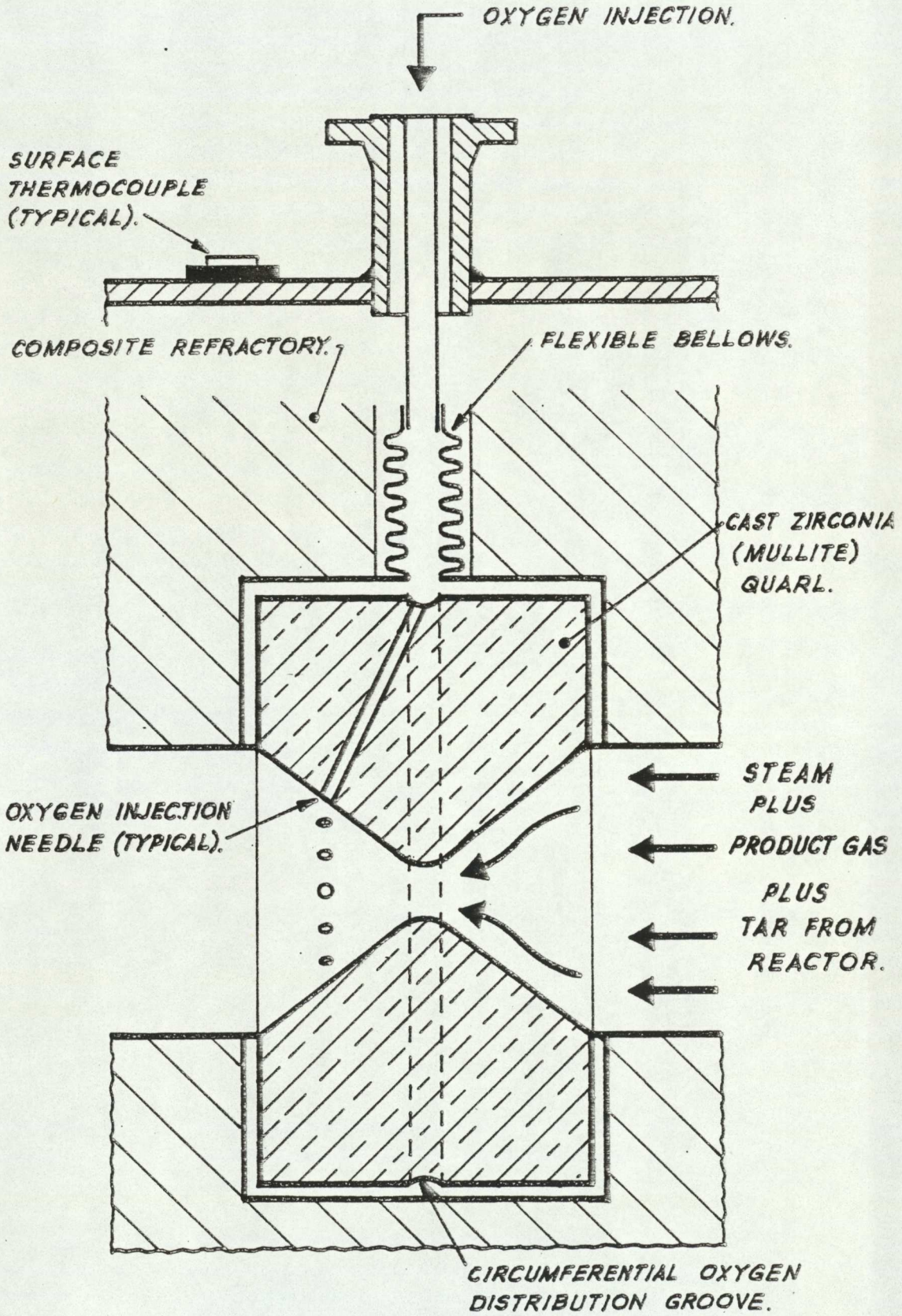

FIG. 6.6 OXYGEN INJECTION QUARL IN VENTURI REACTOR.

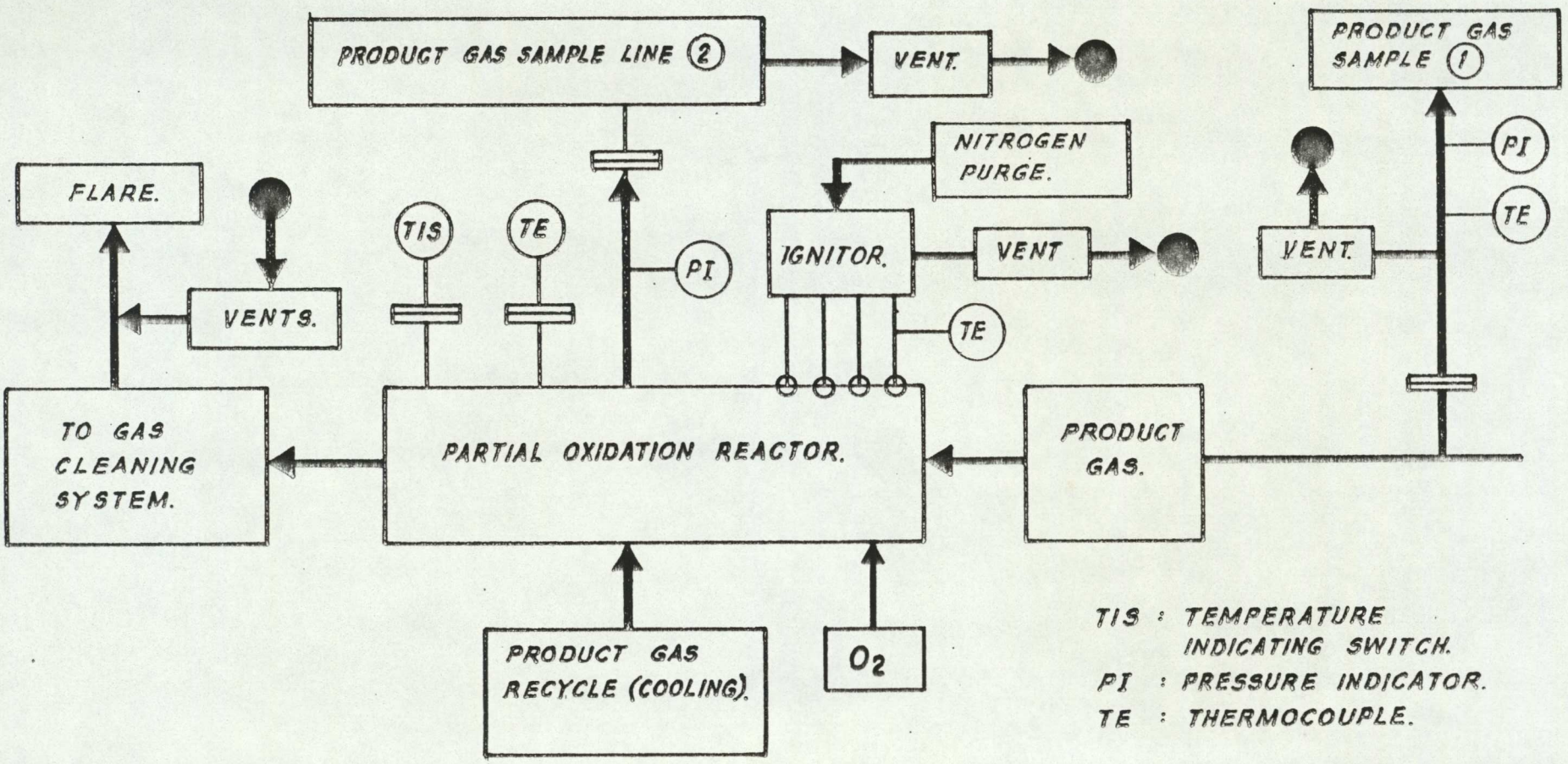

FIG. 6.7. - POX SYSTEMS.

Figure 6.8 Oxygen Supply Scheme

BOC Drawing No. ED/1398/2

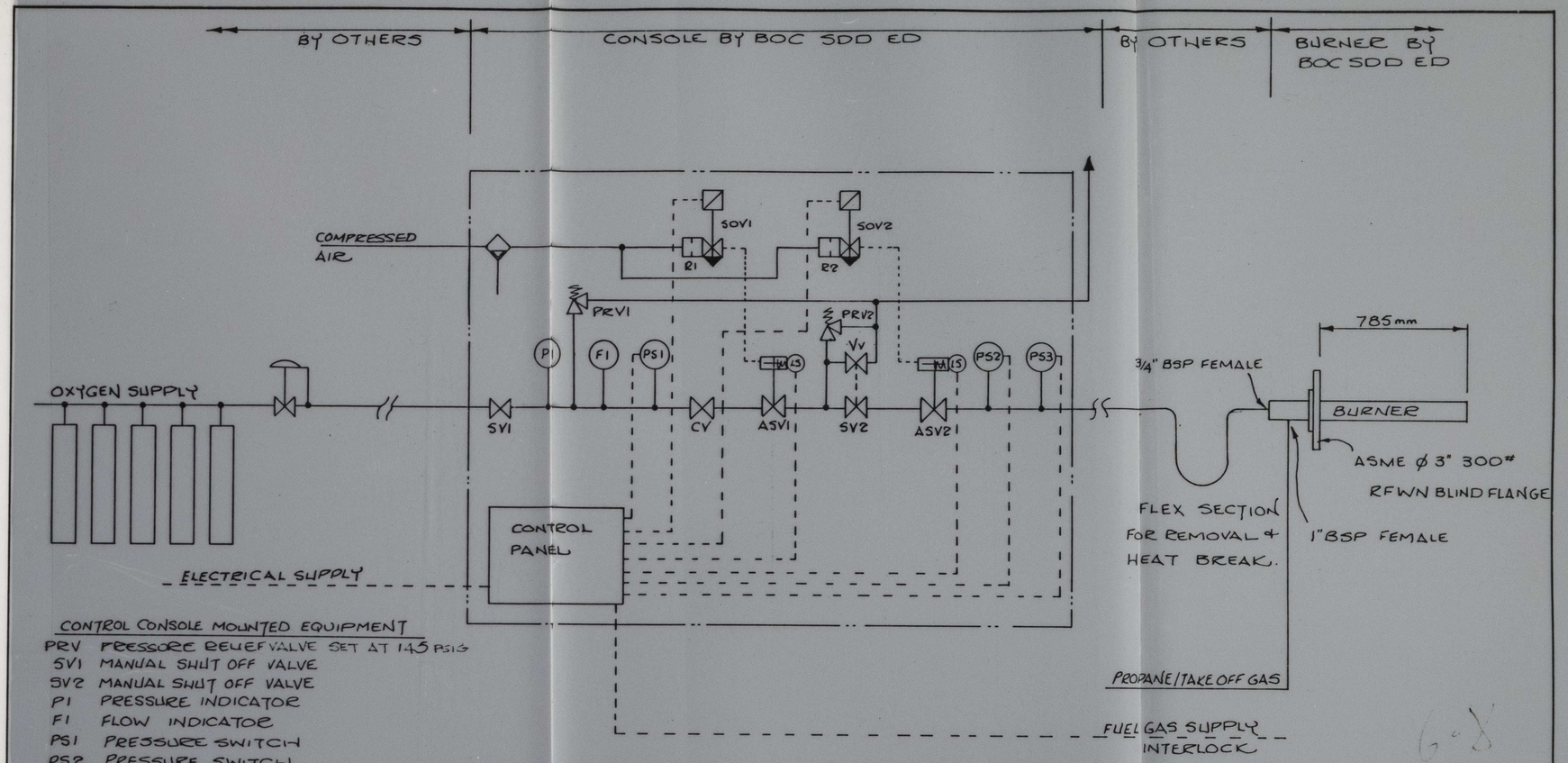

CONTROL CONSOLE MOUNTED EQUIPMENT

PRV PRESSURE RELIEF VALVE SET AT 145 PSIG
SV1 MANUAL SHUT OFF VALVE
SV2 MANUAL SHUT OFF VALVE
P1 PRESSURE INDICATOR
F1 FLOW INDICATOR
PS1 PRESSURE SWITCH
PS2 PRESSURE SWITCH
PS3 PRESSURE SWITCH
CV CONTROL VALVE
ASV1 ACTUATED SHUT OFF VALVE
ASV2 ACTUATED SHUT OFF VALVE
SOV1 SOLENOID OPERATED VALVE
SOV2 SOLENOID OPERATED VALVE
R1 COMPRESSED AIR RESTRICTOR
R2 COMPRESSED AIR RESTRICTOR
FD COMPRESSED AIR AUTO DRAIN FILTER
Vv LINKED VENT VALVE
ELECTRIC SUPPLY - 240 - 1 - 50 Hz
OXYGEN SUPPLY - 10 bar 420 SCFH
COMPRESSED AIR SUPPLY - 5.5 bar
FUEL GAS SUPPLY - ? bar
INTERLOCK - VOLTAGE FREE CONTACT REQD.

BURNER CHAMBER PRESSURE - 0-30 bar @ 350°C
BURNER GAS ENTRY PRESSURE:
OXYGEN - UP TO 8 bar FUEL GAS - ? bar

This drawing and the copyright thereto are the property of B O C Limited and all the information which it contains is confidential. The drawing must not be reproduced or disclosed, nor must any information taken therefrom be disclosed without the prior consent in writing of B O C Limited.

B O C Limited
Equipment Development
Gases Division
Deer Park Road
London SW19 3UF

Drawing Number ED 1398/2

Drawn CDC | Checked | Approved | Date 10-04-81 | Scale N/A

Title REVISED PROPOSED OXYGEN SUPPLY SCHEME FOR F.W.P.P LTD BIO-MASS GASIFICATION TEST RIG, BURNER

8317G

OZALID (UK) LTD

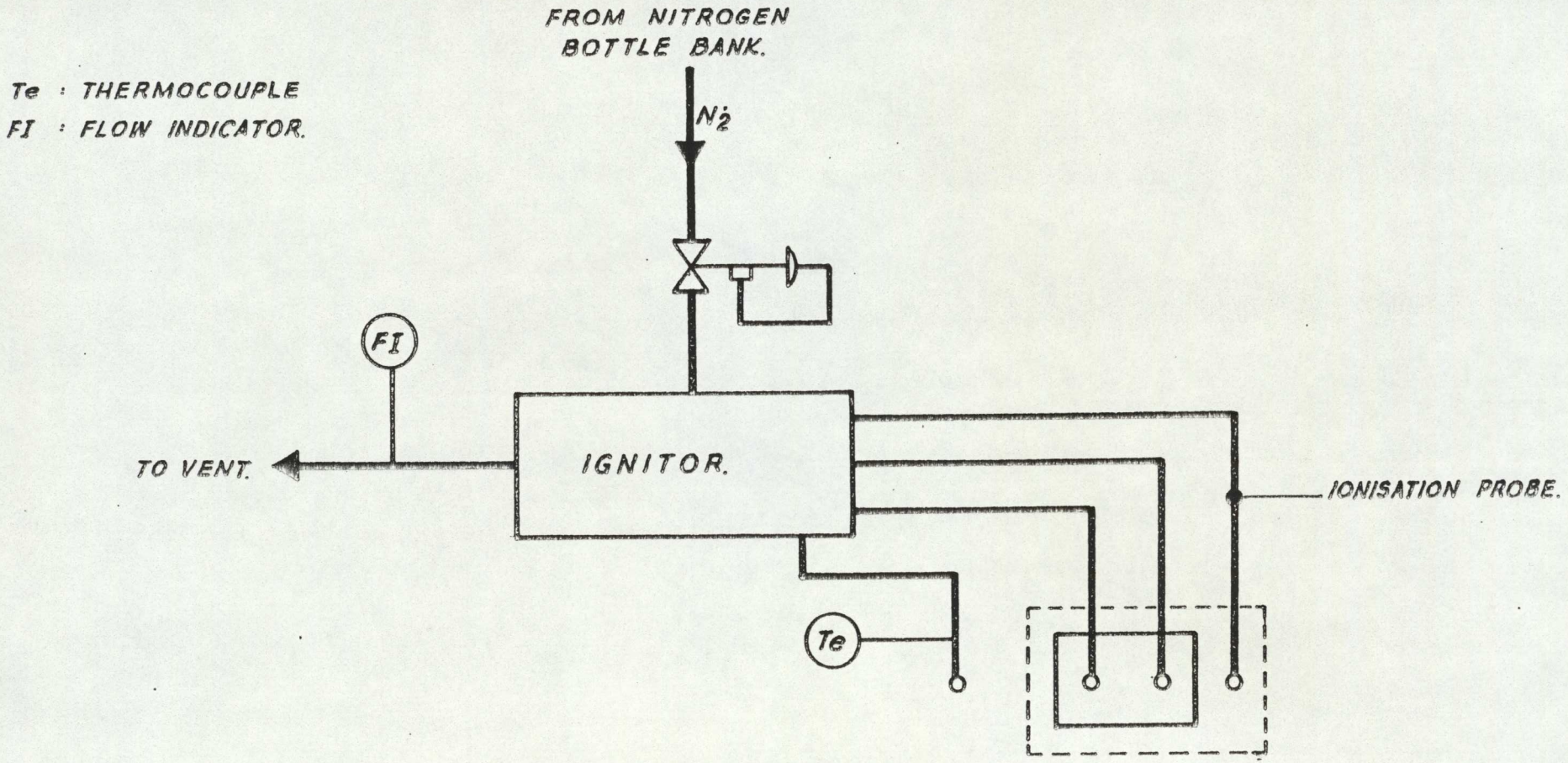

FIG. 6.9 - POX IGNITION ELECTRODES ASSEMBLY.



Figure 6.10. Unlined P.O.X. ignition electrode assembly

7.0 ASH REMOVAL SYSTEM

7.1 Specification

The ash removal system was required to cool and transfer the solid product emerging from the base of the selected gasification reactor on a semi-continuous basis. The residue discharges from the reactor base at temperatures up to 1000 C at a maximum reactor pressure of 30 bar g. The discharged material will be either inert refractory particles (used as a feed support during start-up see section 7.7) or ash and/or char from the wood chip feed. Some wood feed may also require to be handled, in the case where reactor operating conditions are such that feed is unreacted. The ash removal system specification is give in Table 7.1 below.

TABLE 7.1

Specification of Ash Removal System

Variable		Notes
Design code	: ASME VIII Div I	
Operating pressure	: 2-30 bar g	As specified for gasifier trials
Design pressure	: 30 bar g	
Maximum ash Temperature	: 1000 C	At reactor discharge flange
Maximum metal temperature	: 300 C	Ash cooling required
Feed	: Ash/char/wood*	See section 7.3
Feed size	: 10-20 mm+	See chapter 4.0
Maximum feedrate	: 100 kg/h	Unreacted feed
Design feedrate	: 0.7 kg/h	Ash plus char

* Also Molochite on start-up

\+ Ash/char will range from 'dust'(0.1 micron) to 20 mm also agglomerates may form in the bed (high temperature)

7.2 Evaluation and Options

Four residue removal options were considered :

a) Enclosed vibratory conveyor
b) Quench sluice
d) Valved lock hopper
d) Screw conveyor

For each of these options, a design constraint was the requirement to mate up the selected system to the 16 in class 300lb reactor discharge flange (see chapter 5.0). Valve systems (gate valve, ball valve, globe valve) were briefly reviewed but considered unsuitable because of the high temperatures at the exit (up to 1000 C). Abrasion, scoring and entrapment of residue an inert bed material would also cause operational problems such as seal damage and jamming.

A further design constraint was the distance between the reactor discharge flange face and floor. This constraint arose from optimisation of reactor throughput (hence physical size) with available headroom in the surrounding pilot plant building (see Figure 3.3).

7.2.1 Enclosed Vibratory Conveyor

The first option outline is shown in Figure 7.1. This system would operate with the hot reactor residue emerging from the base of the reactor in a loose vertical plug and spilling onto the conveyor. It would then be transferred horizontally to a local collection/storage hopper by a reciprocating or vibratory motion, imparted by a rapidly switching solenoid or flywheel.

Due to the high char/ash temperature at discharge a temperature resistant conveyor was required but which was not available. Modification requirements for a proprietary vibratory conveyor unit were reviewed. To permit safe

operation, it would be necessary to protect the drive thermally. Char/ash cooling would need to be undertaken in the conveyor to ensure uncooled jacket metal temperatures were limited to the design maximum of 300 C. Additionally, pressurised operation could not be undertaken without extensive and complex re-engineering of the conveyor to conform with the adopted ASME VIII design code requirements.

As the modifications were considered excessive, this option was rejected.

7.2.2 Quench Sluice

In the second outline option shown in Figure 7.2 consideration was given to the possible removal of reactor residues by mounting a lock hopper below the reactor, controlling the residue discharge rate into the hopper and quenching the residue with water. The ´slurry´ would then be sluiced out of the hopper through a valved blowdown line to a disposal drum.

When this scheme was examined in detail, a number of difficulties became evident. These were principally:

a) valve selection and operation - no suitable valve could be identified which would withstand the aggressive environment (high temperature and pressure plus abrasive solids) at the reactor residue outlet point. In addition to possible gas leakage, a further problem would arise from heat conduction through the valve body to the vessel flanges. These have a design operating temperature of 300 C (see chapter 5.0) which would be exceeded with this configuration.

b) residue specification /density - the density of both the wood chip feed and ash/char products is less than that for water. Choking could arise in the quench vessel on discharge/blowdown as the residue would float on the

quench water, resulting in a preferential liquid discharge and leaving the residue blocking the vessel. This could possibly be avoided by incorporating a larger valve and/or more specific hopper design, but space limitation and valve sealing problems would remain.

c) quench steam - superheated steam would be generated by contact with the hot ash/char. This could cause a back pressure pulse through the plant when the discharge sequence is initiated and the upper valve opens. The steam flow would effect the gasification reactions. The instantaneous pressure pulse could also affect operation of the main automatic system pressure control valve, if the pre-set system pressure was exceeded (modulation).

d) blowdown - design of the blowdown would be complex due to the need to vent toxic product gas and steam whilst separating solids for ultimate disposal. Any valves in this system could be subject to jamming from solids settling from the discharge slurry.

e) makeup - due to steam being produced in quenching the char and free water being discharged on blowdown, a water makeup supply is required. The makeup would have to be under a high/low level control interlocked to valve operation to ensure correctly sequenced water delivery and level. This would add an additional level of control complexity.

As a result of the above assessment this option was rejected.

7.2.3 Lock hopper

A lock hopper arrangement was considered as shown in Figure 7.3. This system is similiar in principle to the reactor feeding system. A triple valve stack is used to make a double lock for residue discharge on a batch basis. The use of lock hoppers in the residue system poses a

number of problems:

a) the upper valve in the stack would have to cut through a plug of hot abrasive solids. In continuous operation its sealing life would be limited with either a metal-metal seal or with a formed asbestos seal(or equivalent).

b) flow control over residue discharge would be limited to a minimum rate set by the overall valve cycle time and the trapped volume between the upper two valves forming the upper lock hopper. Allowing for the design constraint of mating with the lower (16 in class 300 lb WNRF) reactor flange and assuming a maximum 152 mm valve gate separation, the upper lock hopper volume would be approximately 0.05 m^3 (1.7 ft^3). This volume represents a 9.0 kg char/ash discharge or approximately 11 hour running, when the reactor is being fed at its design 'normal' feed rate of 40 kg/h (see section 7.3). On this basis, the valve system would only need to operate once to displace the total residue from a 12 hour run.

c) The third reservation concerned the effect of continuous operation on valve body temperature. Whilst external (valve body) cooling could be undertaken, cooling of the valve gates could not be done simply. At high temperatures the standard gate valve would not be capable of with standing elevated pressures and would therefore be unsuitable.(de Zurich quote a maximum operating pressure of 10 bar g at 300 C [7.1]). Because of the above reservations, the lock hopper option was rejected.

7.2.4 Screw conveyor

The screw conveyor arrangement shown in Figure 7.4 was choosen because it satisfied the ash system specification outlined in section 7.1 and beacuse it was also capable of matching the system requirements summarised in Table 7.2 below.

TABLE 7.2

Comparative Features: Selected Ash Removal Options

System	EVC	QS	LH	SC
Characteristic				
Simple design	N	N	Y	Y
High Temperature use	N	Y	N	Y
Jamming	N	Y	Y/N	Y/N
Continuous	Y	N	Y/N	Y/N
Water use(direct)	N	Y	N	N
Control system	Y	Y	Y	Y
Size (large/medium)	L	L	M/L	M
Discharge control	N	Y	N	Y
Relative ranking	4	3	2	1

Key: 1=best option, 4=worst option, Y=Yes, N=No

7.3 Design and Manufacture of Screw Conveyor

Because of its small size and specialist (screw) technology, the unit was designed in detail and manufactured under a sub-contract. Fabrication was generally in accordance with the given specification and outline design shown on Figure 7.4. A number of key design points are noted for additional clarification:

In the choosen arrangement, discharge residue from the reactor rests across 30.9 mm diameter hollow flight blades located inside a water cooled cylindrical shell. Type 312 stainless steel was specified for fabrication of the uncooled blades because of its heat resistant properties (see Table 7.1 for ash specification). Water is delivered to the shell at 20 C and flowrate is manually controlled by a 12.5 mm (1/2") regulator as shown in Figure 7.4, to give a maximum water discharge temperature of 70 C.

The solids are displaced from the reactor in plug flow and transferred horizontally by manual (handwheel) rotation of the screw. At the discharge end of the screw the (cooled) residue falls into a batch collection hopper. The hopper was sized to collect the displaced inert bed from a 12 hour run with the reactor being fed with, and gasifying or part gasifying , wood chips.

As discussed in chapter 4.0, the maximum wood feed rate to the reactor is limited to 100 kg/h ('as received' basis). Recognising the situation where completely unreacted feed exits from the reactor, a maximum residue removal rate of 100 kg/h was therefore specified. This rate assumes no reactions are taking place within the reactor. When the gasification reactions are occuring, the typical residue exit rate will be no more than 2 kg/h (see Table 7.1).

The Molochite (graded refractory) start-up bed will have the particles size distribution shown in Appendix 7.1.

Small particles of Molochite were considered to be more suitable than large particles because of their better flow characteristics in the confined reactor volume. The quoted bulk density of 1200 kg/m^3 [7.2] is much greater than the selected wood feed. In a simple density evaluation, the following figures were measured on a sample of the proposed feed wood:

Mass of wood = 13 kg
Volume of container= 0.06 m^3
Bulk density = 217 kg/m^3
(averaged figures from four repeat evaluations)

The average wood particle size of 20 mm is also very much less than Molochite. Removal of Molochite material from the reactor would not affect the overall size of the residue system, aside from the reception hopper, which needs to accomodate the total residue volume, (as displaced inert start-up bed for short runs). The residue handling system was designed to operate on a volume rather than a mass basis as this is one of the critical feed and residue characteristic in terms of both the reactor feed inlet and char/ash discharge nozzles diameters (volume flow per unit area).

7.3.1 Ash Characteristics

When virtually complete gasification occurs, the reaction product will consist almost entirely of ash from the feed with a small amount of char from pyrolysis reactions. Based on the feed analysis shown in Appendix 4.1 and at the maximum feed rate, given above, a char/ash removal rate of no more than 1.0 kg/h will be required. At maximum feed rate in a continuous 12 hour gasification run, approximately 1200 kg of 'as received' wood chip would be fed to the system and 8.4 kg of ash would be produced (less than 0.7 kg/h). This assumes a 30% moisture content (wet basis)(see appendix 4.1). When operating at the design feed rate of 40 kg/h the ash production rate

will reduce to less than 0.3 kg/h.

An allowance for incompletely reacted char was made in sizing the collection hopper. This ensured that unreacted char in the reactor would not 'bottleneck' the plant operation due to the ash hopper filling up rapidly. The allowance was based on the following assumptions:

a) the intermediate pyrolysis reactions produces a maximum of 30% (wt) char-including ash, from an 'oven dry' wood feed.

b) only 90% of this char is gasified

c) 'as received' feed moisture is 30% (wet basis)

For feed rates:	100 kg/h	40kg/h
Total feed to reactor (12h)	= 1200 kg	480 kg
Oven dry weight (0.7x1200)	= 840 kg	336 kg
Total char produced (840x0.3)	= 252 kg	101 kg
Char (at 10% char unreacted)	= 25.2 kg	10.1 kg
Ash	8.4 kg	3.4 kg
	33.6	13.5

As fresh feed is delivered into the reactor its weight crushes the bed char to produce a relatively dense product of approximately 16-24 kg/m^3 (10-15 lb/ft^3). On the basis of the assumed bulk density of 24 kg/m^3 the required volume (screw plus hopper) would need to be 1.4 m^3 (49.4 ft^3) (at 100 kg/h feeding) or 0.56 m^3 (19.7 ft^3) (at 40 kg/h).

The screw and residue hopper can accept a volume of approximately 0.65 m^3 (23 ft^3)-allowing for a Molochite flooded screw at startup. Assuming the char bulk density of 24 kg/m^3, the residue system can handle 15.6 kg (34.4lb) when operated on a batch basis. Based on the design feed rate of 40 kg/h there is therefore a small margin to allow for uncertanties in factors such as feedrate, percentage reacted char and char density.

For higher feed rates (up to the 100kg/h maximum specified), and also if continuously poor char gasification takes place, the reception hopper would have to be modified to permit continuous discharge of ash/char. At temperatures less than 600 C very little char gasification occurs so char levels could be high. Based on a 12h run at 100 kg/h the total char volume could be 15.75m^3.

If complete char gasification takes place then the residue will be essentially all ash. Assuming 100 kg/h feedrate,

8.4 kg of ash will be produced. With a density of 24 kg/m^3 the volume will be only 0.35 m^3 (12 ft^3) for a 12 h run. As maximum quantity of residue discharging from the reactor will be very small if the reactor is operating correctly a fractional rotation of the screw conveyor handwheel will have a significant effect on the reacting mass inside the reactor due to reacting charge movement. To control this, a sensitive mechanical revolution counter was mounted on the screw shaft. The counter will also be used during commissioning, to approximately calibrate the reactor feed interface (bed height) position versus screw rotation. This cannot be done accurately due to the changing characteristics of the bed when the reactor is operating (feed size, density and so on).

If extended, continuous experimental runs were to be undertaken, the 'batch' hopper at the screw conveyor discharge would be replaced by a lock hopper arrangement essentially identical to the feed system. The residue disposal system could then be operated on a semi-automatic basis. It is possible to automate the ash discharge by mounting a geared drive unit in place of the handwheel. This was not felt to be neccssary within the proposed limited experimental programme (see chapter 14.0).

7.4 Conveyor Supports

The conveyor was supported from the lower reactor flange as shown on Figure 7.5 and Figure 7.6 by support springs mounted on the main structure. The springs were sized, to balance the turning moment arising from the cantilever action of the conveyor (including full water jacket) and contents, when supported from the reactor discharge flange alone. The effects of reactor temperature and pressure were examined for two cases:

a) Reactor cold and pressurised and
b) Reactor hot and pressurised (at max temperature 300 C)

Full calculation details are given in Appendix 7.1.
Two main assumptions were made to simplify analysis:
a) The weight of the small attachments, 38 mm (1.5") nozzles, handwheel and screw scroll could be neglected.
b) The weight of the metal water jacket could be neglected but not the weight of the water.

7.4.1 Weight of Conveyor Plus Components

Estimated weight: Nuts/bolts/scroll/water, Jacket
Total Weight = 2995 lbf (1.34 tons) = 13.332 KN

7.4.2 Reactor Cold Condition

The ash removal system was assumed to place a tensile load on the reactor ash discharge flange equivalent to the force due to the mass of the blank flange used for the hydraulic tests: 307 lbf (1.375 KN).

7.4.3 Reactor Hot Condition

Expansion of the reactor vessel was assumed to compress the support springs to the point where no load was applied to the reactor ash discharge nozzle flange and all the ash screw conveyor weight was carried by the spring supports.

7.4.4 Vessel Expansion

Assumming a coeficient of linear expansion
(alpha) = 11.5 x 10^{-6} / C and maximum temperature rise of 300 C in the conveyor then:

Reactor expansion=L_0T(alpha) =1.24x300x11.5x10^{-6} =0.043m
Reactor expands downwards by 4.3 mm

TABLE 7.3

Summary of Results

	Support R_1	Support R_2
Cold load	7.97 KN	3.66 KN
Hot load	8.45 KN	4.55 KN
Load change	0.48 KN	0.89 KN
Spring rate	0.1116 KN/mm	0.207 KN/mm

The spring supports finally selected for installation were as follows:

Support R_1

Spring Rate = 0.111 KN/mm
Free length = 245 mm (9.646") [load = 0]
Solid length = 140 mm (5.5") [load = 11.7 KN]
Load of 7.5 KN at 177.4 mm [67.6 mm (2.7") compression]
Load of 10 KN at 154.9 mm [90.1 mm (3.6") compression]

Support R_2

Spring Rate = 0.206 KN/mm
Free length = 85 mm (3.346") [load = 0]
Solid length = 49 mm (1.93") [load = 10.1 KN]
Load of 3.5 KN @ 68 mm [17 mm (.67") commpression]
Load of 5 KN @ 60.7 mm [24.3 mm (0.9") compression]

7.5 Operational Considerations

A number of general operational factors were considered in relation to the performance of the ash system. Some of these are discussed below.

7.5.1 Reception Hopper Bridging

Provision was made for dealing with potential blocking or bridging inside the collection hopper, by welding a flanged nozzle onto the shell above the hopper. The bolted flange seal plate shown in Figure 7.4 supports a duplex thermocouple which monitors temperature at the screw discharge point. If a hopper blockage is suspected, by, for example, increased screw resistance the plate can be removed and the hopper 'rodded' (only undertaken after de-pressurisation and inert gas purging).

7.5.2 Screw Jamming

A 305 mm (12 in) diameter hollow flight was selected to fit into a 305 mm (12 in) NB (324 mm [12.75 in] ID) screw tube to minimize the potential jamming problems arising from residue particles lodging in the gap between flight and shell. The 50.8 mm (2 in) diameter flight shaft end was drilled to capture a 25.4 mm long spiggot welded to the inner casing approximately 1 m above the hopper exit flange face as shown in Figure 7.4. Trapping the shaft in this way allows even screw rotation without 'flexing' which could damage the packed shaft seal. The drilled spiggot trap in the shaft end is approximately twice the depth of the spiggot, to accomodate thermal expansion as hot residue contacts the screw shaft.

Assuming a coefficient of linear expansion:
(aplha)=11.5x10^{6}/ C
Shaft length 2.13 m (7')
and maximum shaft temperature of 500 C

Then as $L_T = L_O\{1+\text{alpha } T\}$
shaft expansion = $2.13 \times 11.5 \times 10^{-6} \times 500$
= 0.0122 m (0.48 inches)

7.5.3 Water Jacket

A 6 mm thick carbon steel tubular casing with a 50 mm flow section and 3 mm thick outer jacket conforming to BS

1449/HR15 clads the entire screw, to remove heat as hot residue is transferred by screw rotation to the discharge hopper mounted below the screw end. Water flow to the jacket is manually controlled by a 12.5 mm (1/2") regulator valve located at the lowest point in the jacket Figure 7.4. A maximum water exit temperature of 70 C was assumed based on a water inlet temperature of 20 C. The low point was selected on the basis that if water flow to the jacket fails ,the jacket will remain at a maximum temperature of 100 C until the contained water boils off. If the cooling water discharge point was higher and the regulator was accidentally closed during residue removal, then pressurisation of the water jacket could occur due to steaming.

The cooling water can remove up to 0.7 MW (2.3×10^6 BThU/h) of heat. The heat absorbed by the jacket water is rejected to atmosphere by the site cooling tower to which it connects.

7.5.4 Thermal Insulation

External insulation on the ash screw shell was omitted to assist ash cooling. The inlet nozzle to the screw was refractory lined with a 50 mm thickness of Plicaso 200 (see chapter 5.0) to maintain the reactor discharge flange and screw inlet nozzle and flange below the maximum design temperature of 300 C. This is shown in Figure 7.4. The refractory thickness was calculated using the iterative technique described in Appendix 5.4. The reduced lining thickness in the screw inlet nozzle compared with the reactor ash discharge nozzle, is compensated by the water jacket which provides additional cooling. Full flange cooling with the water jacket was not possible because of interferance with the flange bolts.

7.5.5 Purge gas and seal

A pressurised seal and bearing block (similar in design

to the seal shown in Figure 11.5, was bolted onto a 12" class 300lb blank flange which was in turn bolted to the 12" class 300 WN flange welded to the screw conveyor. The 50 mm diameter flight shaft pases through the blank flange and combined bearing / seal block to a handwheel.

The block comprises a 50 mm sealed roller bearing located within a housing and separated from the seal packing by the housing wall. The packing consists of a bronze lantern ring sandwiched between two solid graphite ('Graphitol') rings. The whole assembly is captured by a close tolerance (+0.00/ -0.01 mm) flanged slip fit compression block bolted through the seal flange. The compression block faces onto a 50 mm thick bronze pusher disc. This block can be adjusted to compensate for seal wear by bolt take-up.

The lantern ring has 4x10 mm holes equi-spaced on the yoke. The yoke centre lies on line with an inert gas nozzle. Argon or nitrogen purge gas is delivered to the seal via the nozzle and ring, at a pressure just above the selected rig operating pressure. In the event seal damage occurs through wear, the inert gas will leak preferentially into the screw or out to atmosphere. In either case it will prevent emission of gaseous reactor products to atmosphere.

7.6 Instrumentation

A duplex Cr /Al thermocouple was mounted through the 38 mm nozzle above the discharge hopper Figure 7.4. This is employed to moniter the hopper temperature. The thermocouple is linked to the system alarm circuit and trips if the temperature exceeds the design maximum metal temperature of 300 C.

A Cr/Al thermocouple located in a thermowell set in the water discharge line, detects temperature for subsequent thermal balance calculations.

As previously mentioned, a sensitive revolution counter was mounted adjacent to the hand wheel to record handwheel rotation.

7.7 Commissioning and Operation

The cold reactor was partially filled with graded Molochite to simulate reactor start-up conditions. The first attempt to extract this from the reactor using the screw conveyor failed because the screw jammed. On dismantling the unit, it was found that the screw shaft was bowed. This almost certainly arose when the flight was welded to the shaft during manufacture. The shaft was made 'true' by selective heat treatment and applied force. As a further precaution against jamming the flight blade edge was ground down to increase the shell clearance by an additional 10-12 mm. It was considered that the extra 'static' layer of solids would not interfere with residue discharge.

Following reassembly of the unit ,the test was repeated and satisfactory Molochite removal took place. It was noted that the force required to displace the charge was substantial due to the frictional resistance being encountered. This problem was overcome by changing the handwheel for an extended (0.5 m) lever, permitting application of greater torque on the shaft. The use of a lever in this way could affect seal life and a more appropriate solution would be to mount a simple gear assembly on the shaft. This would also permit a finer control over residue discharge rate.

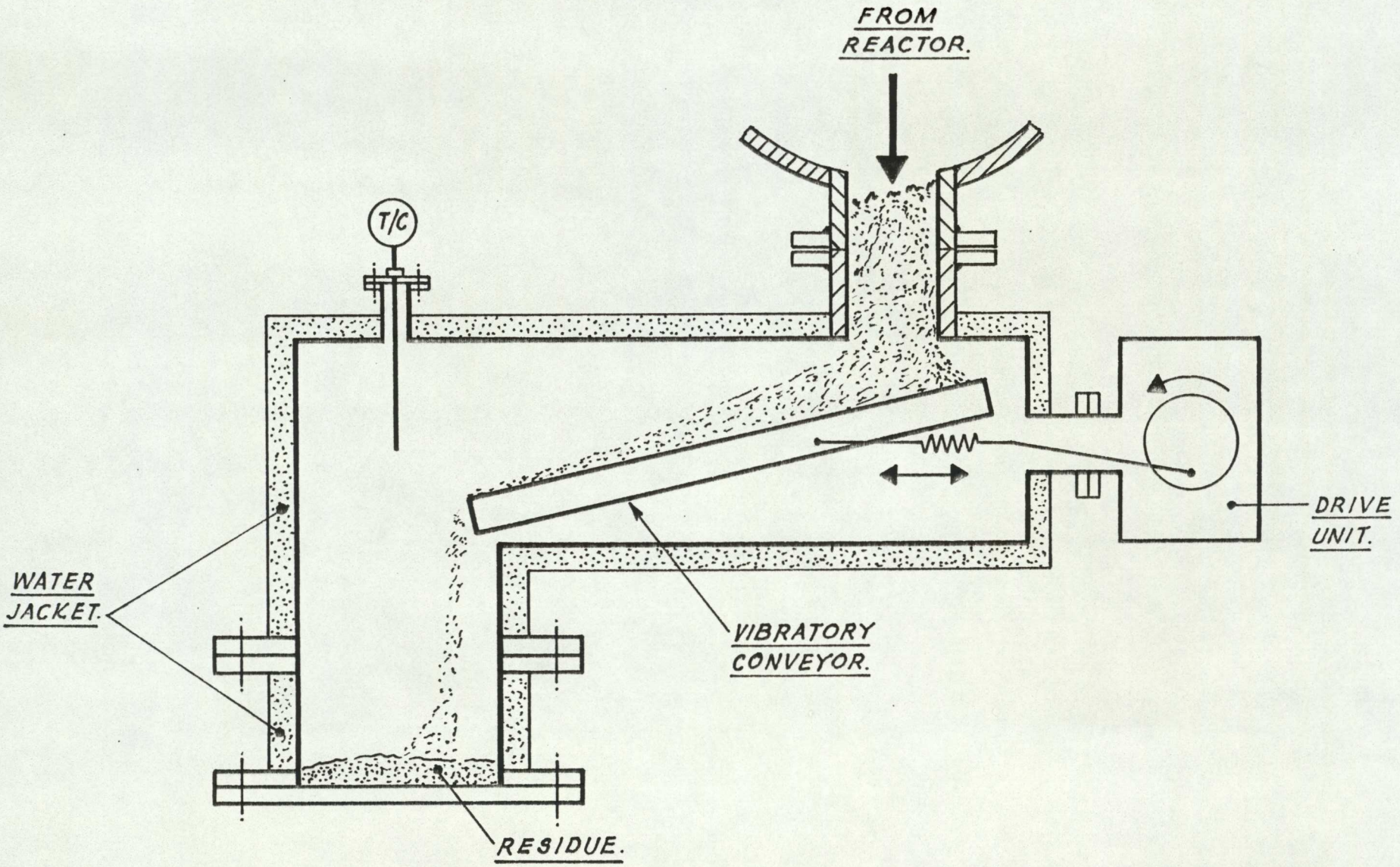

FIG. 7.1 ENCLOSED VIBRATORY CONVEYOR.

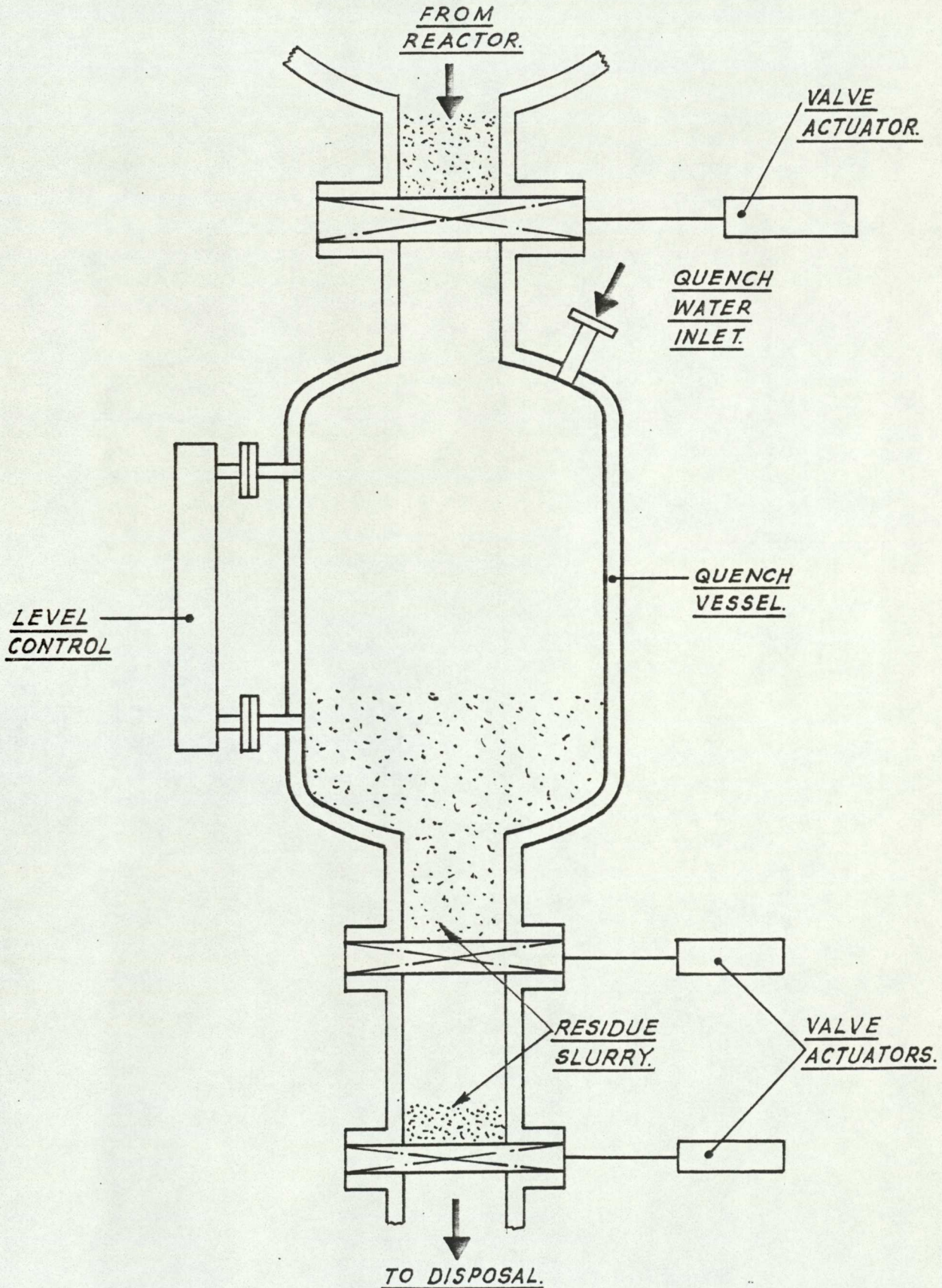

FIG. 7.2 QUENCH SLUICE.

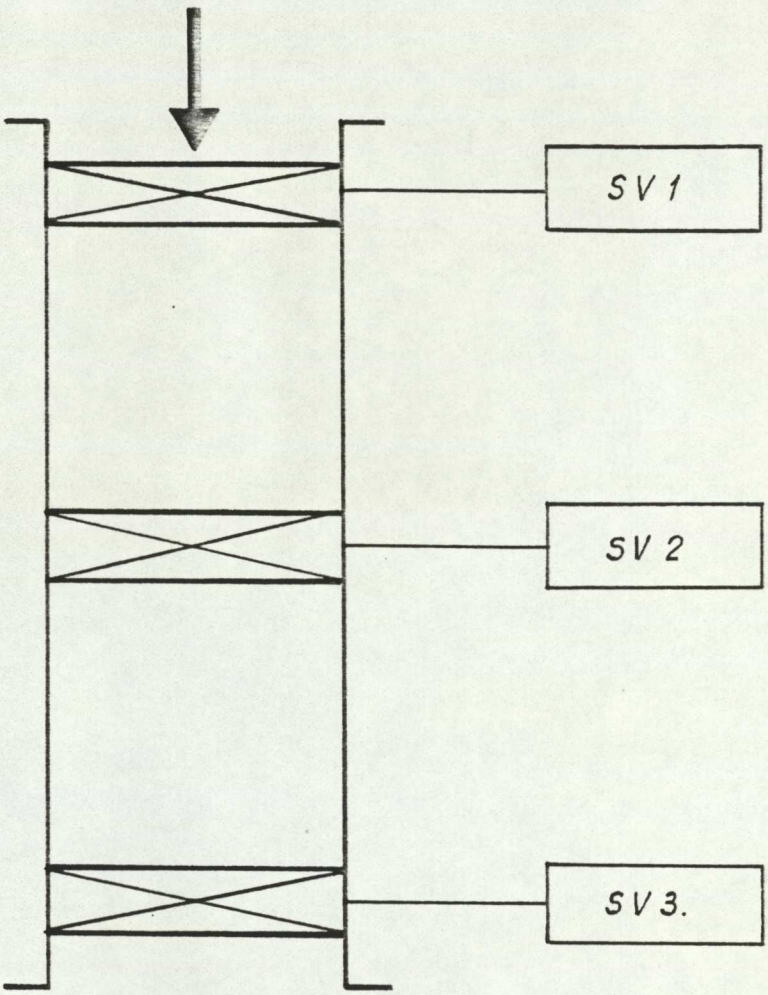

FIG. 7.3 - DOUBLE LOCK HOPPER SYSTEM.

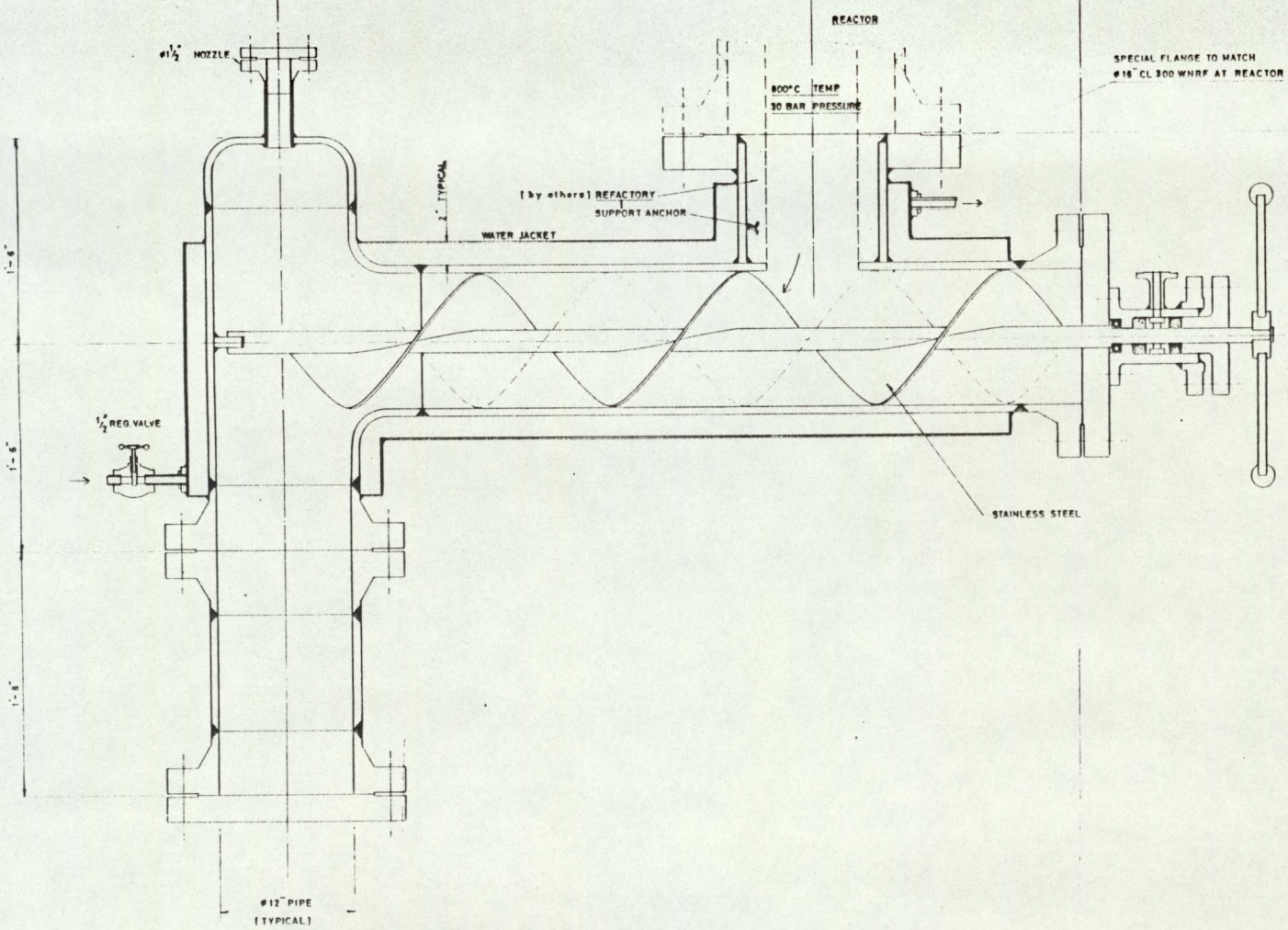

FIGURE 7.4 [SEE FIGURE 3.9]

MATERIAL CARBON STEEL U.O.S.
PRESSURE 30 BAR
TEMPERATURE 800°C FROM REACTOR
SUPPORT BRACKETS TO BE INCLUDED
ALL TO A.S.M.E. STANDARD SECTION VIII

REV.	DATE	BY	ALTERATION	CHK'D	APP'D
a	16/12/80	R.D.	NOZZLE REMOVED. 4'-8" DIMENSION WAS 5'-9"		
b	22/1/81	R.D.	PACKING SHAPE ALTERED ø18" CL300WNRF WAS CL400		
c	27/1/81	R.D.	WATER JACKET ALTERED, END CAP ADDED, VALVE MOVED, S/CHANGE REM.		

F.W.P.P. LTD. ENGINEERING REQ'N. No.

CHAR / ASH REMOVAL SYSTEM
ARRANGEMENT FOR BIOMASS
GASIFICATION TEST RIG

FOSTER WHEELER POWER PRODUCTS LTD.

THIS DRAWING IS THE PROPERTY OF FOSTER WHEELER POWER PRODUCTS LTD. THE RECIPIENT THEREOF MUST NOT REPRODUCE OR COPY THE SAME NOR PART WITH PERMISSION THEREOF NOR USE THE SAME SAVE AS MAY BE NECESSARY FOR THE PURPOSE FOR WHICH IT WAS SPECIFICALLY FURNISHED BY FOSTER WHEELER POWER PRODUCTS LTD.

No. OF UNITS:
SCALE: N.T.S.
JOB/PART No.
CONTRACT No. 8-86-04801
DRAWN BY R.D. 25 2 80
CHECKED BY
APPROVED BY
DRAWING No. RD 695-3
REVISION a b c

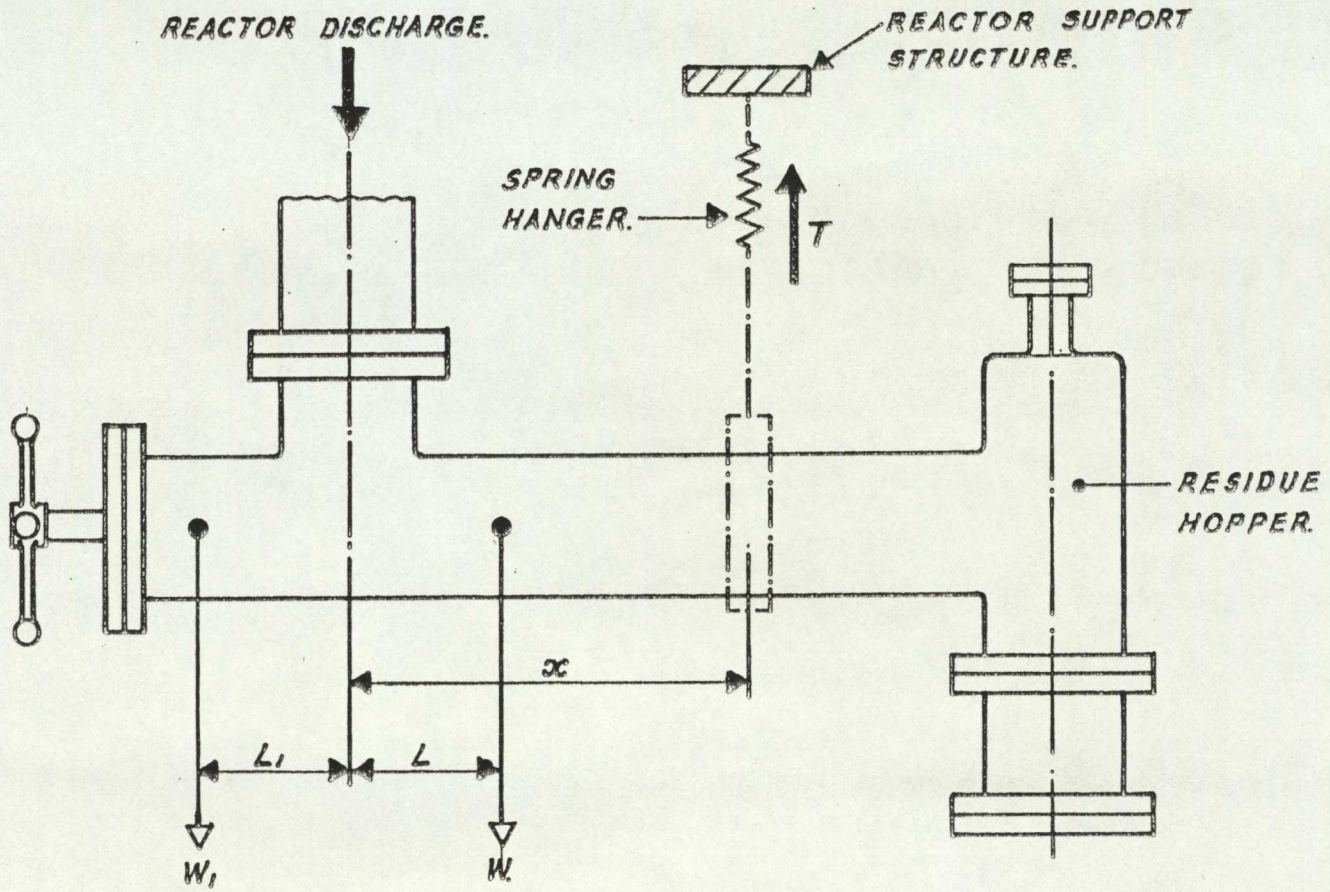

FIG. 7·5 REACTOR SPRING HANGER SUPPORT.

Figure 7.6 Spring Support Hangers

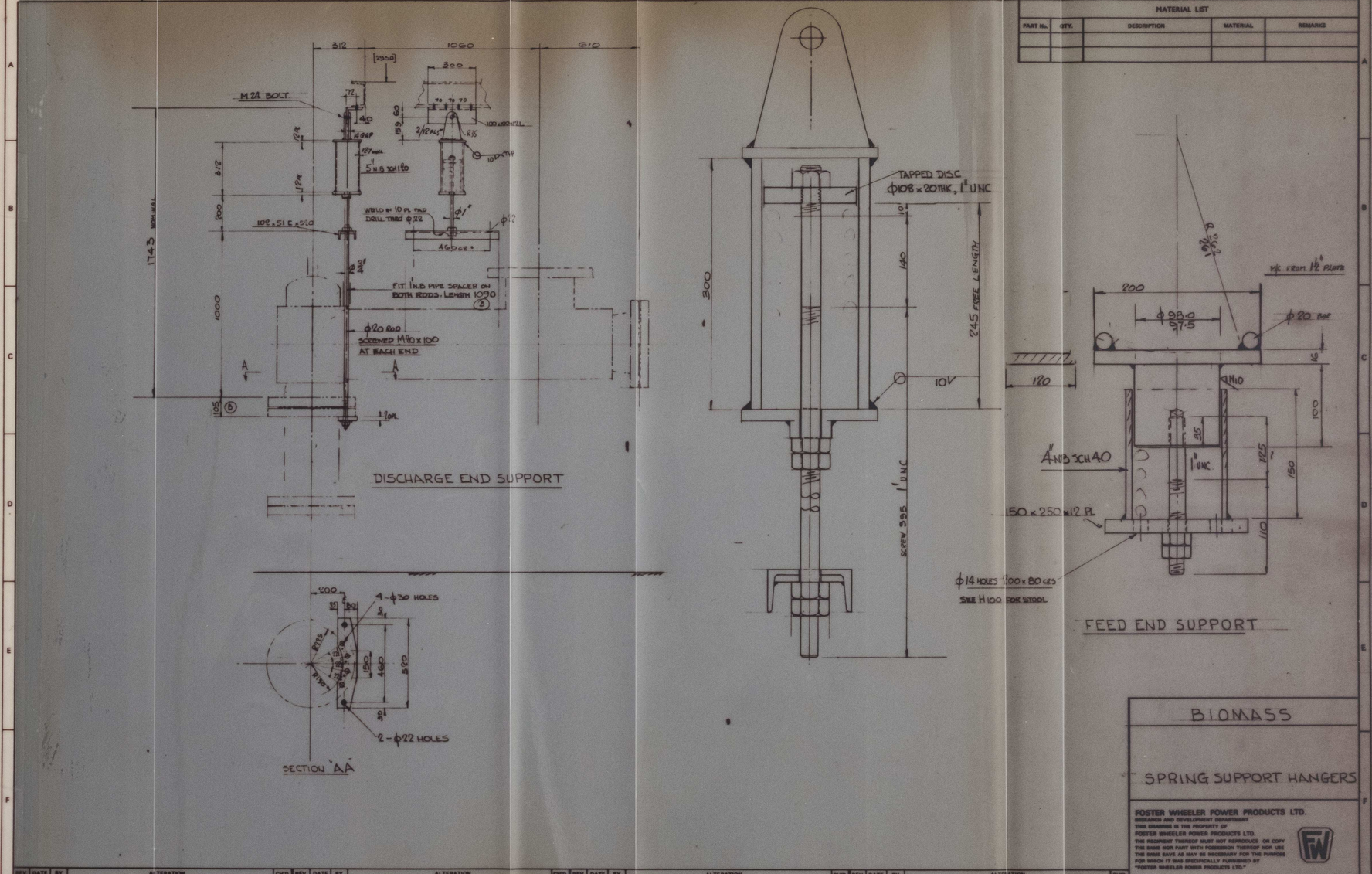

8.0 GAS CLEANING SYSTEM

As discussed in chapter 2.0, the gasification reactions taking place in the main reactor result in the generation of four products:

1) **char**
2) **ash**
3) **organic condensate (tar plus steam)**
4) **gases**

The proportion and composition of the products will change, depending on a wide range of factors such as temperature, pressure, gas flowrate and type of reactor. In all cases however, the products from the reactor need to be disposed of.

The solid product is removed in the manner described in chapter 7.0, aside from particulates of char and ash which become entrained in the product gas exit line from the reactor. Organic condensate remains in the product gas as a vapour until the dew point temperatures of its constituents is attained, at which point it commences to condense out. Particulates can cause erosion in downstream equipment or plugging by deposition which is exacerbated by any deposited tar. To avoid operational difficulties, tars and particulates must be removed from the gas if it is to be piped over distances as short as 1m.

Selection of gas cleaning equipment depends primarily on two factors: the type of gasifier used and the intended use of the gas. The type of reactor, and to some extent, the feed characteristics, determines the concentration of particulates and tars in the gases. The end use will determine the tolerable particulate and tar concentrations.

8.1 Specification

The gas clean-up system, shown schematically in Figure

8.1, was required to operate on a continuous basis accepting the exit gas stream from the selected reactor either directly or via a partial oxidation reactor (see chapter 6.0). The system specification is given in Table 8.1 below:

TABLE 8.1

Gas Cleaning System Specification

Vessel design code	:	ASME VIII Div 1
Design pressure	:	30 bar a max.
Gas inlet temperature	:	500 C max.**
Gas outlet temperature	:	100 C approx.
Gas flowrate	:	310 kg/h
Gas molecular weight	:	28.8
Cooling water* in	:	20 C
out	:	80 C
Particle removal efficiency:		98% of 10μ

* If used

** Gasifier product gas diluted with cold recycle gas. (see chapter 6.0)

8.2 Evaluation and Options

8.2.1 Background

A literature search produced only limited data on gas cleaning systems for biomass gasification, particularly for tar removal. Some relevant information was found on coal gasification cleaning systems for particulates but, even in this area, there was little available data on tar. There is uncertainty on the similarity of coal and biomass derived tars.

Particulate size distribution is an important design criteria in the specification of gas cleaning devices. Particulates (or tar droplets) below 1-2μ are difficult to remove using conventional technology.

Tar compositions are also an important design factor but there is no 'typical' tar composition. The composition as well as the amount is dependent on the operating conditions which can be expressed in the form of a thermal time/severity function. The properties of tar vary from a 'primary', highly oxygenated, short residence time product, produced at temperatures up to 500 C, to a 'secondary' highly aromatic, deoxygenated tar which is produced during a longer residence time and temperatures around 900 C.

As previously noted, tar and particulate levels in product gas varies with gasifier type. A recent review of available information for different types of gasifier has been compiled [8.1]. The summary data are reproduced in Figure 8.2.

8.2.2 Gas Cleaning Technologies

Various gas cleaning systems exist for removal of both particulates and tars from gases. Often these overlap, particularly when tars are present as liquid droplets

following condensation. Figure 8.3 shows a range of particle and droplet sizes and the type of collection mechanism appropriate for various sizes.

8.2.3 Particulate Removal

Solid particulate is generally fly ash or char. The class of separators most widely used for removal of particulates are the centrifugal type units (cyclone). For more rigorous removal electrostatic precipitators, baghouses and other filtering methods are available. These separators are generally operated above the dewpoint of any tars, oils or water that might be present to avoid any sticky combination of tars and char. Depending on the physical properties of the contaminants, this may be from 150 C to 500 C.

8.2.4 Tar Removal

Tars may be present in two forms, either as a vapour or as liquid droplets in fume or mist form. Typical tar removal methods include cyclones, centrifugal separators and wet scrubbers of various kinds. Only at high temperatures can particulate and tar removal be separated. At temperatures where tars and oils condense to liquids, removal of tars and oils cannot be separated from the particulate removal problem. Typical efficiencies for several of the most common gas cleaning systems as a function of particle size are shown in Figure 8.4. Cyclone separators are the least effecient; wet scrubbers are more efficient; and baghouses (fabric filters) and electrostatic precipitators are the most efficient, particularly for sub-micron particles.

8.2.5 Equipment Selection

Some of the main features of commercial and developing particulate and tar removal systems are summarised in Table 8.2. Cyclones can operate at the highest temperatures followed by dry electrostatic precipitators

and granular bed filters. Baghouses are limited to about 290 C by the fabrics they utilize. Liquid scrubbers are limited by the vapour pressure of the scrubbing liquid, usually water. Filter systems capable of operating at higher temperatures are under development. The effects of operating at pressure are being examined and a recent useful review has been documented by Baker et al [8.3]. Generally, pressurised operation reduces the size of gas cleaning equipment. Wet scrubbers, however are generally used only at atmospheric pressure. Some comparative features of commercial gas cleaning systems are presented in Table 8.3 below.

TABLE 8.2

Summary of Gas Cleanup Systems

Commercial Systems	Maximum Operating Conditions		Inlet or Face Velocity	Typical Pressure Drop	Collects Condensed Tars
	Operated C/bar	Projected C/bar	m/min	in H20	
Cyclones	900/high	>1000/high	1200	4 - 6	Yes
Electrostatic Precipitators	500/1	900/20	60 to 90	5 - 35	Yes
Bag Houses	300/1	--	1.5 to 3	15 - 30	No
Granular Bed Filters	500/high	>1000/20+	30	9 - 12	No
Liquid Scrubbers	80/1	--	--	9 - 12	Yes
Aerodyne Tornado	500/34	900/34	--	13	Yes
Developing Systems					
Fibre Filters	--	800/high	30	--	No
Porous Metals	400/1	>800/high	1 to 1.5	--	No
Ceramic	2000/1	--	1 to 1.5	--	No
Liquid Scrubbers	750/1	750/7	--	--	Yes
Panel Bed	550/1	>1000/high	10 to 15	--	No
Ducon	300/1	>800/high	10 to 30	--	No
Pebble Bed	120/1	800/high	10 to 30	--	No

TABLE 8.3

Comparative Feature of Some Commercial Gas Cleaning Systems

Unit Feature	ESP	Cyclone	Bag House	Wet Scrubbers
High efficiency	Y	M	Y	Y
Non-clogging	Y	N	M	Y
Compact size	N	N	N	Y
High pressure experience	N	Y	N	M
Tar tolerant	Y	Y	N	Y
Low cost	N	Y	M	Y
Development potential	M	N	M	Y
Gas turndown	Y	M	Y	Y
Low pressure drop	Y	M	M	Y*
High temperature operation	Y/M	Y	M	Y

* Can be pressure rise due to spray energy

Of the systems commercially available or under development, only the options below were considered applicable for the subject application due mainly to the anticipated high tar levels (particularly with the XFR).

a) Electrostatic Precipitators (ESP)
b) Cyclones
c) Liquid Scrubbers

A number of the developing processes, whilst potentially attractive, were not felt to have sufficient operational experience to be implemented. After review of the short listed options above, it was decided that item a) and b) would not be suitable for the following reasons:

a) ESP

Little high pressure operating experience.
Expensive
Potential electrical problems due to tar and char.
Large size (internal lagging and electrodes)
Poor availability (Vendor)

b) Cyclones

Large (need for internal thermal insulation)
Potential clogging due to tar/char deposits.
Poor tar removal capability.
Low efficiency particulate removal (at less than 10 u)

It should be restated, that the test plant was intended to operate with more than one reactor configuration and therefore the installed equipment requires flexibility. For a gasifier operating in a downdraft mode with low tar levels, a cyclone might be acceptable whilst in an updraft or crossflow mode with high tar levels it is likely to be unacceptable. The choice of cleaning plant had to be capable of dealing efficiently with the worst case which is a gasifier producing a high tar output.

A liquid scrubber does have a number of limitations but as shown in Table 8.4, it was the most promising option for the proposed application. The most efficient wet scrubber design is based on the venturi concept and this was finally selected for inclusion in the gas cleaning system. A further justification for selecting the venturi scrubber was that it offered the most scope for commercial development. There was only limited experience on pressurised performance of wet scrubbers and the test plant was an ideal facility from which to gather data.

TABLE 8.4

Venturi Scrubber Features

Advantages	Disadvantages
High efficiency	Tar and particulates
Non-clogging	removed together (sludge)
Compact(no refractory)	Organics are solubilised into aqueous phase.
High pressure experience	High (water*)vapour pressure
High temperature experience	Possible corrosion problems
Relatively inexpensive	Noisy 'blowdown'
Development potential	Loss of sensible heat
Good gas turndown	Loss of energy heat in soluble organics
Flexible operation	
Low pressure drop	

* Other liquid(s) can be used.

In the test plant application, none of the tabulated disadvatages, with the exception of 'High vapour pressure' are of significance. It should be noted however, that although satisfactory for the test plant application, for full-scale commercial implementation the selection could differ.

8.3 Detailed Design

The scrubber, recirculation pump and pipework, pump discharge valve, pump strainer and heat exchanger was supplied by an external vendor who undertook the detailed system design. The equipment was manufactured generally in accordance with the design specification given in Table 8.1. Proprietry equipment was re-designed to allow it to operate at the design pressure of 30 bar g. The vendor provided a guaranteed particle removal efficiency as shown in Table 8.5 below. A simplified schematic of the gas cleaning system incorporating the selected venturi scrubber is shown in Figure 8.5.

Design check calculations were carried out on the venturi scrubber vessel to validate the design. The calculations based on the vendor manufacturing drawing shown in Figure 8.6, are outlined in Appendix 8.1. It was determined that the sub-contractor had failed to allow for the pressure relief valve in the vessel design calculations. This resulted in the insurance company Engineer-Surveyor downrating the design pressure to 29 bar g. Effectively, this de-rated the entire plant to the same level. Due to project timing difficulties this limitation was accepted.

In addition to the general specification, further provisions were added:

a) The temperature of liquor sprayed into the scrubber should not exceed 40 C (to ensure adequate gas cooling).

b) Cooling water should not be rejected from the heat

exchanger at more than 80 C (to limit steaming).

TABLE 8.5

Venturi Scrubber Particle Removal Efficiency

99.9	percent removal of 50 u particles
99.0	.. .. 25 ..
98.0	.. .. 10 ..
93.0	.. .. 5 ..
50.0	.. .. 1 ..

The problem of scrubber liquor (water) high vapour pressure, was resolved by inclusion of a heat exchanger in the scrubber spray cone feed line. The heat exchanger was specified to reduce the scrubber inlet temperature to less than 40 C. The shell and tube design provided by the vendor is shown as Figure 8.7. Dirty recirculated liquor flows through the 12.5 mm diameter tubes. It should be noted from Figure 8.7 that only 10 percent spot radiography was undertaken. This results in a conservetive (larger) vessel thickness as the joint efficiency factor 'E' is only 0.8 (E=1 for 100 percent radiography).

8.3.1 The Design of the Scrubber Quench System

Although the actual design of this item was contracted out, it was necessary to know, or at least have some idea of the condition of the gas leaving in order to size plant piping. The main functions of the scrubber are:

a) to remove from the gas stream high boiling point components
b) reduce the temperature of the gas stream.

8.3.2 Choice of Final Gas Temperature

A low temperature was considered desirable, because it

allowed cheaper materials of construction to be used. In addition, a reduction in temperature results in a reduction in gas volume, and hence a reduction in pipe size and weight, also at lower temperatures the vapour pressure of water is reduced (see later for the significance of this). A "low" scrubber outlet temperature was therefore selected.

8.3.3 Constraints on Scrubber Outlet Temperature

Cooling water was available on site at 20 C. Since the spray liquor was cooled indirectly in a heat exchanger, and because it is normal to assume a temperature approach of about 20 C, a spray liquor temperature of 40 C was selected. This set the lower limit for outlet gas temperature. An easily achievable temperature of 80 C was choosen.

8.3.4 Calculation of Vapour Loading in Outlet Stream

At a temperature of 80 C, the vapour pressure of water is 0.4736 bar. If a gas is saturated with a vapour then the partial pressure is equal to the vapour pressure. It was assumed that the scrubber exit stream was saturated.

For this calculation it was necessary to have an 'average' gas composition (not an extreme case). An approximate estimate of gas composition was made using the DEBFROG equilibrium programme (see chapter 2.0 and Appendix 2.5). The analysis assumed a pine wood feed and 10 bar g operating pressure.

TABLE 8.6

Estimated Gas Composition (Dry)

	Mass %	Moles	Moles%
H_2	1.5	.75	21.6
CO	26.2	.94	27.0
CO_2	66.7	1.52	43.7
C_2H_6	1.7	.06	1.7
C_2H_4	1.2	.04	1.1
CH_4	2.7	.17	4.9
	100.0	3.48	100.0

Equivalent Molecular Mass = 28.8

The mass ratio of water vapour to dry gas was found using the equation from Treybal [8.4]:

$$H = M_w \, p \, / \, [M_g(P - p)]$$

p = 0.4736 bar (as saturation is assumed)
P = has a range of values from 1 - 30 bar
M_w = 18
M_g = 28.8
H = Mass ratio water/gas
P = Total pressure
M_g = Molecular mass gas
p = Partial pressure water
M_w = Molecular mass water

TABLE 8.7

Water:Gas Mass Ratio versus Pressure

Pressure Bars	Mass Water / Mass Dry Gas (Saturation at 80 C)
1	.623
5	.072
10	.034
15	.022
20	.017
25	.013
30	.011

8.3.5 Liquor Recirculation

In order to calculate the quantity of liquor to be recirculated (and hence the practicality of the operation) to cool the gas to a given temperature, it was necessary to perform an enthalpy balance on the scrubber.

The following assumptions were made:

a) The scrubber operated adiabatically
b) No work was done on or by the surroundings
c) The gas had the same composition at all temperatures
d) All gases were ideal and their enthalpies were dependent on temperature only (Not pressure)
e) The enthalpy of the mixture was the sum of the the component mixture

8.3.5.1 Enthalpy Balance on Scrubber

Assumed conditions of gas into scrubber: 30 bar g, 500 C
Mass of combustion + pyrolysis products

= (160.1 + 67.98 + 24.34) Kg

= 252.4 Kg (maximum because of gas conditions selected)

It was assumed initially, that the 160.1 Kg of hot gas ex furnace were the products of combustion of propane plus a quantity of recycled gas products, and that the recycled gas product contained a negligible amount of water.
Mass of propane burnt = 5.39 Kg
combustion products:

- 16.86 Kg CO_2
- 8.83 Kg H_2O

Therefore of the 252 Kg of gas entering the scrubber (no dilution):

(24.34 + 8.83) = 33.17 Kg water and (by difference)
remainder = 218.8 Kg dry gas

Using the assumed dry gas composition (DEBPROG analysis above),liquor recirculation rate was calculated as shown in Table 8.8 below.

TABLE 8.8

Liquor Recirculation Rate

	Hot Gas	Cooled Gas	Cooled Liquor	Heated Liquor
Press (Bar)	30	30	30	30
Temperature (C)	500	100	40	100
Mass dry gas (kg)	218.8	218.8	-	-
Mass moisture(kg)	33.17	5.25		
Specific enthalpy (dry gas)(Kj/Kg)	667.5	118.3		
Specific enthalpy moisture (Kj/Kg)	3456	2675	4.2 KJ/Kg C	
Total enthalpy (MJ)	260	39.8	252 KJ/Kg flow	

Thermal load = 220.2 MJ/h

Required liquor recirculation rate :

= 220.2/252

= 874 kg/h

Check recirculation piping diameter= 25 mm(1 in N.B.)

= .025 m

Cross-sectional area of piping = 4.91×10^{-4} m^2

Mass flowrate = 874 Kg/h

Density of Water =1000 Kg/m^3

(no allowance for temperature or pressure)

Volume flowrate = 0.874 M^3/h

= 2.43×10^{-4} M^3/s

Velocity of liquor = $\frac{2.43 \times 10^{-4}}{4.91 \times 10^{-4}}$ M^2/s

= 0.49 m/s

This was considered to be low but acceptable.

8.3.6 Equipment Supply: Gas Cleaning

The principle components of the plant are listed in Table 8.9 and discussed briefly in the following sections.

TABLE 8.9

Gas Cleaning Plant: Equipment List

1	Twin Jet Venturi Scrubber Vessel.
2	Shell and Tube Heat Exchanger.
3	Liquor Recirculation Pump c/w Strainer and Discharge valve.
4	Liquor Blowdown Control Valve.
5	Flash Blowdown Drum c/w Gas vent and Drain.
6	High and Low Level Sensors.
7	Level Indicators and Transmitters
8	Water Make up Pump c/w Non-return Valve
9	Pressure Relief Valve

8.3.6.1 Twin Jet Venturi Scrubber Vessel

This item has been dealt with in detail above and will not be discussed further.

8.3.6.2 Shell and Tube Heat Exchanger

A shell and tube exchanger was specificied for cooling the recirculation liquor. The shell side of the heat exchanger was connected to the works cooling tower. A U-tube design was specified to reduce the overall vessel length. The shell side design pressure was 30 bar g and tube side 2.7 bar g with respective working temperatures of 55 C and 35 C.

8.3.6.3 Liquor Recirculation Pump c/w Strainer and Discharge Valve

A centrifugal liquor recirculation pump was supplied

complete with motor, base plate, spacer coupling, stuffing box and coupling guards, to deliver on a continuous basis up to 6,800 Kg/h of oil-based emulsion. A specific gravity of 0.8 was assumed in the absence of accurate information. It was further assumed that an equilibrium condition would arise in the scrubber through a run, where oils and tars were being condensed out from the product gas stream and "blown down" to maintain liquor level (see section 8.3.6.4.) A maximum temperature of 100 C was assumed with a suction pressure of 30 bar and delivery pressure of 32 bar. A strainer was incorporated to remove particulates in the liquor, to prevent pump damage. A discharge valve was located upstream of the pump to allow draindown, for maintenance/ replacement.

The pump initially supplied by vendor was a Sulzer CZ-32-160, suitable only for operation to maximum pressure of 25 bar (pressure at pump outlet - 23 bar suction plus 2 bar generated head). This was returned to the vendor, for replacement.

8.3.6.4 Liquor Blowdown Control Valve

The maximum mean flow rate through the blowdown line from the Venturi scrubber was expected to be 150 kg/h. For control purposes it was decided that this should be discharged in a period between 30 seconds and 10 minutes, corresponding to maximum and minimum flow rates of 5 l/s and 0.25 l/s, respectively. It was assumed that the liquor discharging from the scrubber was similar to water. The following minimum criteria laid down for the valve in the line are given in Table 8.10 below:

TABLE 8.10

Scrubber Blowdown Flowrates

System Press (bar a)	Minimum Flowrate (l/s)
2	0.25
10	0.75
30	1.35

The maximum allowable flowrate was considered likely to be exceeded by an order of magnitude for all system pressures between 2 and 30 bar, so a flow restriction was incorporated through a variable orifice control valve. If a simple orifice was used to restrict the flow, the velocity could be as high as 78 m/s at a system pressure of 30 bar, which is far too high a velocity to be acceptable (noise,erosion).

The control valve was linked to the Venturi level control system via a level transmitter and a level indicator controller, as shown in Figure 8.5. The control valve had a normally closed by-pass valve mounted in parallel to permit manual discharge in the event of control valve malfunction.

8.3.6.5 Flash Blowdown Drum c/w Gas Vent and Drain

The blowdown liquor line, downstream of the control valve, was directed to a simple blowdown drum (45 gallon drum), which discharged liquor to drain and steam/evolved gas to the vent flare system. It was noted that CO_2 was particularly soluble in water at pressure, and that the blowdown drum might require modification if boiling or surging caused problems. The discharge line from the drum was taken in a vertical U configuration, as shown in

Figure 8.5, to prevent toxic gases being blown down the drainline.

8.3.6.6 High and Low Level Sensors

As shown in Figure 8.5, two level transmitters provide signals for scrubber blowdown control valve operation and water make-up, (positive displacement pump). These were located on the Venturi manifold, shown in Figure 8.8. The manifold was constructed from 6 in NB Sch 40 seamless pipe and standard weight weldolet fittings (see Materials List Figure 8.8). This unit was designed in accordance with ASME VIII Div 1 procedure. A manifold system was chosen to allow a liquid "dead leg" in the measurement tube which reduced the possibility of level float blockage due to tar accumulation. It also permitted level measurement in a system which could be turbulent.

8.3.6.7 Level Indicators and Transmitters

As indicated, a float-type (Masoneilan) level indicator was used in the manifold. The level indicator was selected to generate a high/high and low/low signal for control and alarm purposes. The signals from the level indicators are passed to Foxboro transmitter control relays/drivers for blowdown/make-up level control.

8.3.6.8 Water Make up Pump c/w Non-return Valve

A single acting Grosvenor "S" type pump was selected to provide make-up mains water. The flowrate was determined by:

a) the make-up rate to provide water lost by evaporation
b) the rate at which the scrubber body is required to fill after blowdown.

Based on a 40 Kg/h feed rate to the reactor and assumed feed calorific value of 14350 kj/kg, and also assuming 20

Kg of propane was fired with calorific value of 46340 kj/kg, a total enthalpy of 1500 Mj/h results. Taking the latent heat of vapourisation of water as 2200 kj/kg and assuming all the energy input goes to raising steam the resulting steam flow would be 682 kg/h. It was assumed that the process would have a likely efficiency of 80% in terms of useful enthalpy output, and the maxium water flow would then be 136 kg/h.

The rate at which the scrubber body should fill was set to 50 mm per minute, corresponding to a complete fill from blowdown level to maximum level in approximately 10 minutes. For the nominal bore of 508 mm (20 in). This gave a flowrate of 744 kg/h (164 gph).

8.3.6.9 Pressure Relief Valve

The pump was equipped with pressure relief valve with $^1/_2$" BSP connection piped to drain. On the discharge side the connection was 2 in NB.

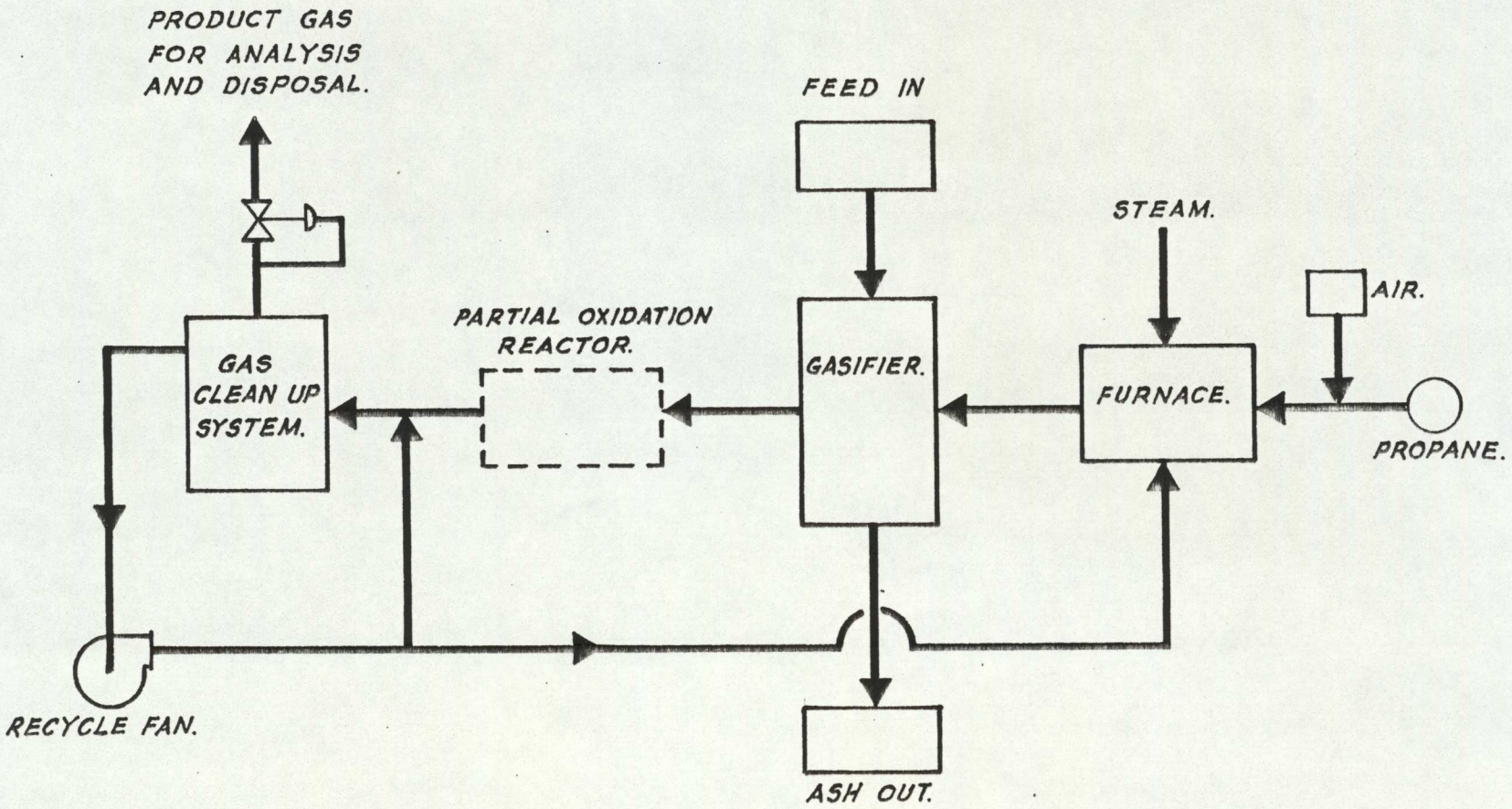

FIG. 8.1 CONCEPTUAL PLANT ARRANGEMENT SHOWING GAS CLEAN-UP SYSTEM.

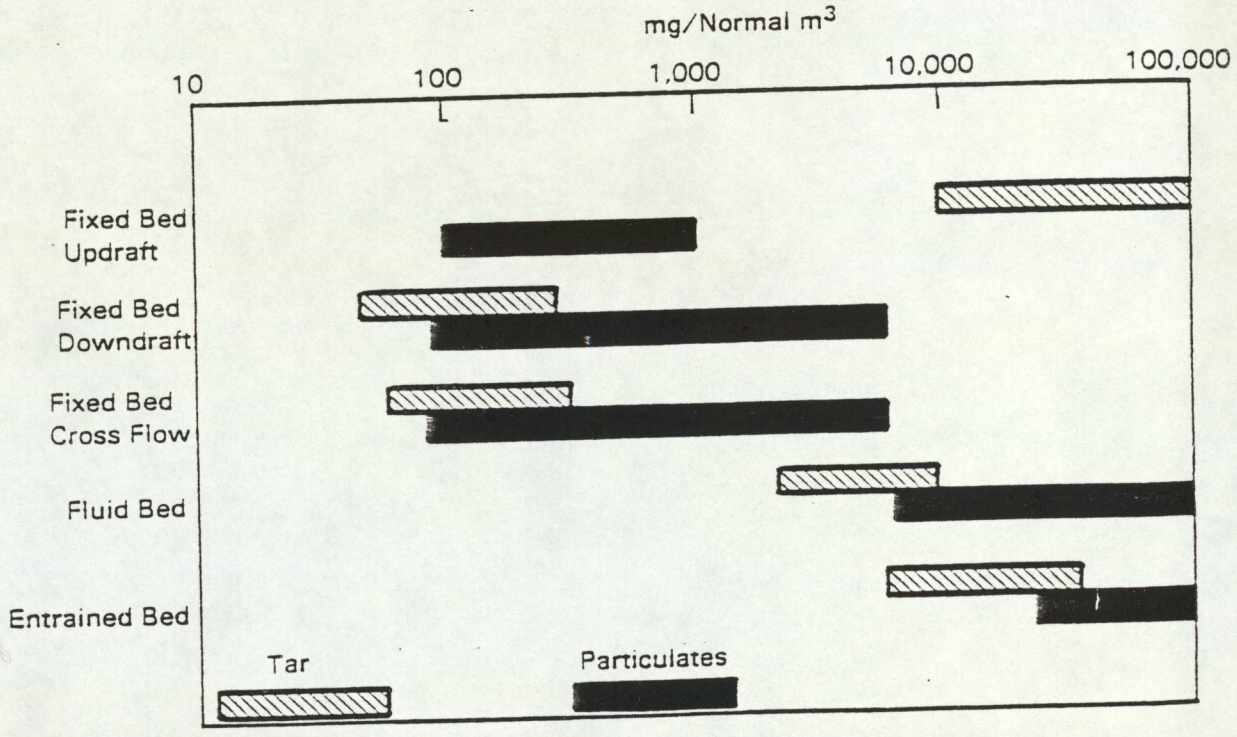

FIGURE 8.2 Particulate and Tar Loadings in Biomass Gasifiers [8.1]

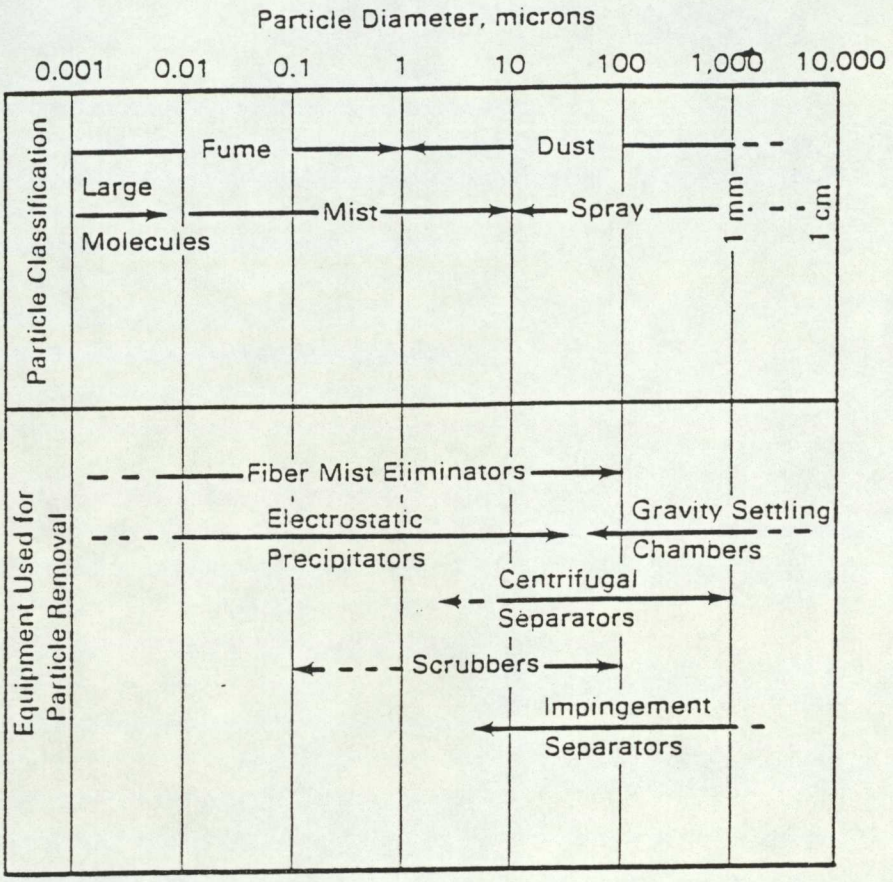

FIGURE 8.3 Particle Size Classification and Useful Collection Equipment [8.1]

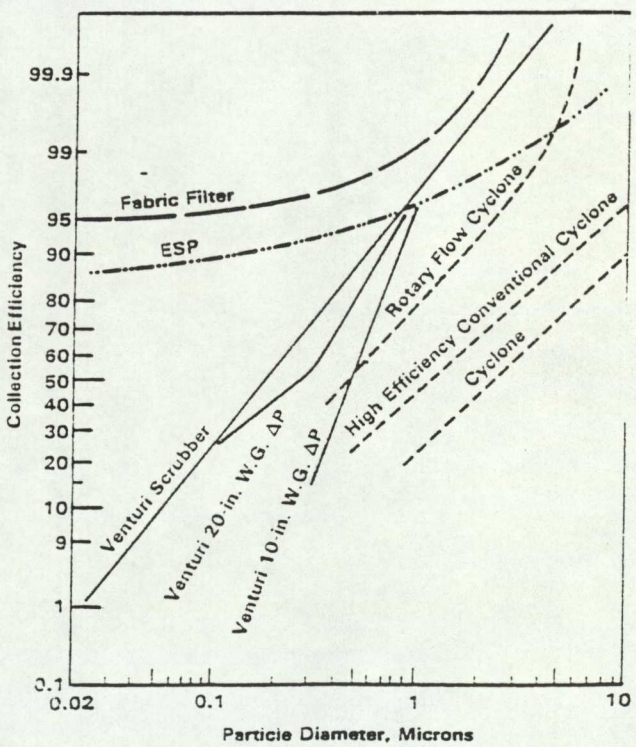

FIGURE 8.4 Typical Efficiencies for Various Gas Cleaning Methods [8.1]

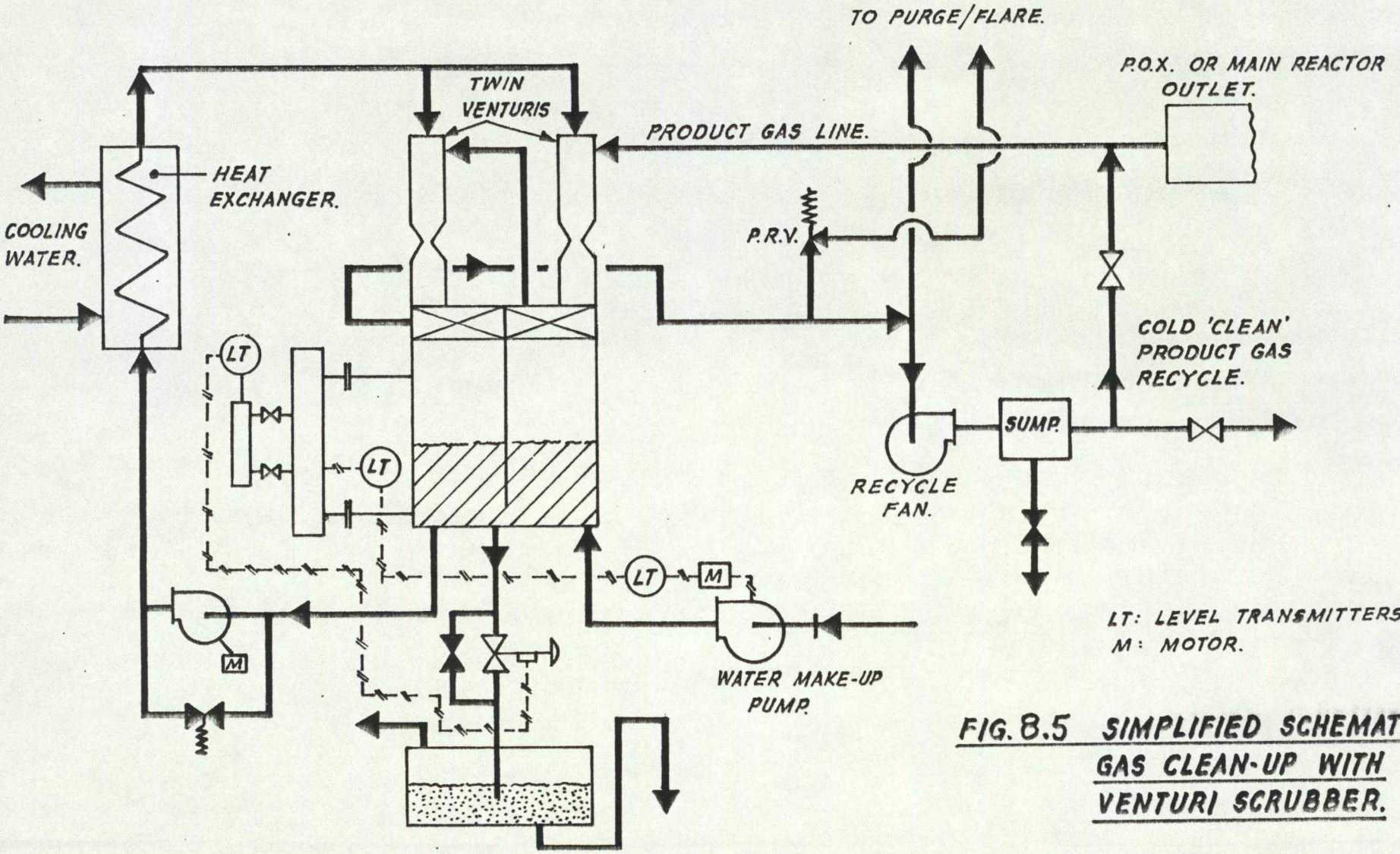

FIG. 8.5 SIMPLIFIED SCHEMATIC GAS CLEAN-UP WITH VENTURI SCRUBBER.

Figure 8.6 Castletree Engineering Ltd

Drawing No. 80/874-02 (Rev. 4)

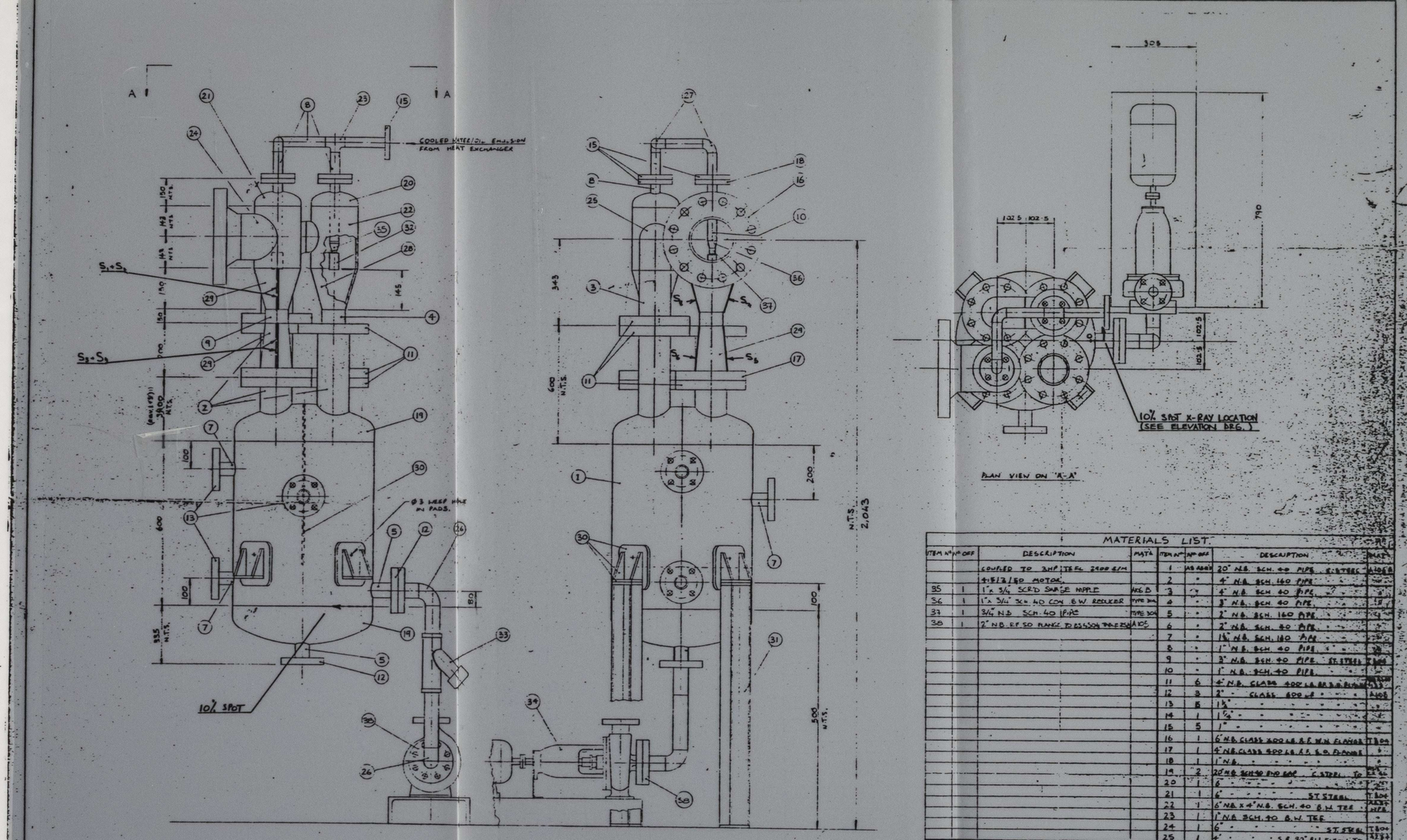

MATERIALS LIST

ITEM No.	No OFF	DESCRIPTION	MATL
		COUPLED TO 3HP TEFC 2900 R/M 415/3/50 MOTOR	
BS	1	1" x 3/4" SCRD SWAGE NIPPLE	WELD
S6	1	1" x 3/4" SCH 40 CON B.W REDUCER	TYPE 304
S1	1	3/4" N.B SCH 40 PIPE	TYPE 304
S8	1	2" N.B. RF.SO FLANGE TO BS5500 TABLE E	A105

ITEM No.	No OFF	DESCRIPTION	MATL
1	AS REQD	20" N.B. SCH. 40 PIPE	C.STEEL
2	"	4" N.B. SCH. 160 PIPE	"
3	"	4" N.B SCH 40 PIPE	"
4	"	3" N.B. SCH. 40 PIPE	"
5	"	2" N.B. SCH. 160 PIPE	"
6	"	2" N.B. SCH. 40 PIPE	"
7	"	1½" N.B. SCH. 160 PIPE	"
8	"	1" N.B. SCH 40 PIPE	"
9	"	3" N.B. SCH 40 PIPE. ST.STEEL	T.304
10	"	1" N.B. SCH. 40 PIPE.	"
11	6	4" N.B. CLASS 400 LG.R.F.S.O FLANGE	A105
12	3	2" " CLASS 600 LG " " "	A105
13	5	1½" " " " " "	"
14	1	1¼" " " " " "	"
15	5	1" " " " " "	"
16	1	6" N.B. CLASS 300 LG. R.F. W.N FLANGE	T.304
17	1	4" N.B. CLASS 300 LG. R.F. S.O. FLANGE	"
18	1	1" N.B. " " " " " "	"
19	2	20" N.B. SCH 40 END BOX C.STEEL TO BS 1500	
20	1	6" " " " " "	
21	1	6" " " " ST STEEL	T.304
22	1	6" N.B. x 4" N.B. SCH. 40 B.W TEE	A403
23	1	1" N.B. SCH. 40 B.W TEE	"
24	1	6" " " " ST STEEL	T.304
25	1	4" " " S.R 90° B.W ELBOW TO BS 1640	A234
26	2	2" " " " " "	"
27		1" " " " " "	"
28	AS REQD	6mm THK. PLATE. C.STEEL	BS 1501
29	"	" ST STEEL	T.304
30	"	10 mm THK PLATE C STEEL	
31	"	102 x 51 x 10.42 KG/M CHANNEL	AL5
32	2	BATE SPRAY NOZZLE REF. NCF 0306 K30	T.303
33	1	STRAINER	
34	1	SULZER TYPE 32/160 PUMP. DIRECT COUPLED	

DESIGN DATA

1	DESIGN CODE - ASME VIII
2	CONSTRUCTION - CATEGORY 1
3	DESIGN PRESSURE - 30 BAR
4	OPERATING PRESSURE - 15 BAR
5	DESIGN TEMP. - INLET VENTURI 500°C, REMAINDER 350°C
6	OPERATING TEMP.
7	RADIOGRAPHY - LIMITED SPOT

REV.	BY	DATE	CH'KD	DESCRIPTION
7				
6				
5				
4	M.F	4.5.81		ITEM 28 REPLACES ITEM 2., ITEMS 35, 36 AND 37 WERE ADDED
3	A.W	9.1.81		DIMENSION 320 PREVIOUSLY REVISED IN 2 WAS FURTHER REVISED TO 400. SUPPORT HEIGHT SIMPLIFIED. + DESIGN DATA ADDED. DRAIN NOZZLES LOCATED
2	A.W	17.10.80		MATERIAL SPEC ALTERATIONS & ADDITION OF WEEP HOLES.
1	A.W	23.10.80		320 DIMENSION WAS 280
0	A.W	3.10.80		FOR CLIENT APPROVAL

CASTLETREE ENGINEERING LTD. THIS DRAWING IS THE PROPERTY OF CASTLETREE ENGINEERING LTD. IT MUST NOT BE COPIED, USED OR REPRODUCED WITHOUT THE WRITTEN CONSENT OF CASTLETREE ENGINEERING LTD.

TITLE: GENERAL ARRANGEMENT AND COMPLETE MATERIALS LIST FOR TWO STAGE JET VENTURI COOLER.

FOR FOSTER WHEELER POWER PRODUCTS LTD.

CASTLETREE ENGINEERING LTD
28 WADHAM ROAD, BISHOPS STORTFORD, CM23 2EB HERTS.
TEL 0279-58216 TELEX 817748

SCALE 1:5 | DIMENSIONS IN MM | DRG No. 80/874-02 | REV. 4

Figure 8.7 Castletree Engineering Ltd

Drawing No. 80/874-04 (Rev. 5)

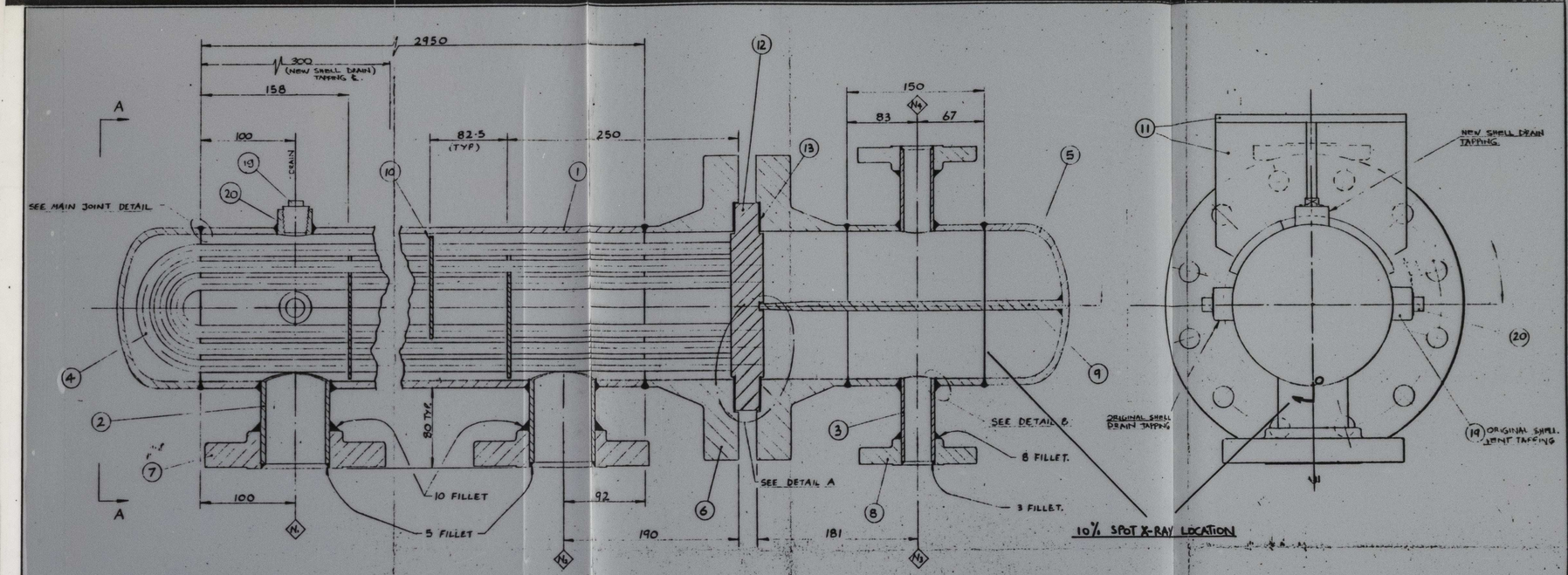

SECTIONAL PLAN.
(SADDLE SUPPORTS OMITTED FOR CLARITY)

VIEW ON 'A-A'

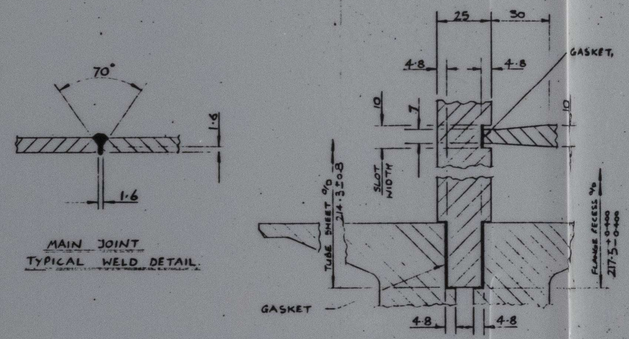

DETAIL A

MAIN JOINT
TYPICAL WELD DETAIL.

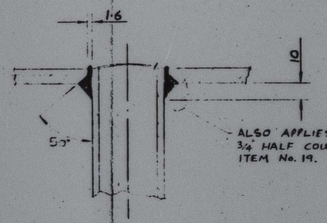

ALSO APPLIES TO 3/4 HALF COUPLINGS. ITEM No. 19.

WELD DETAIL B
TYPICAL BRANCH WELD DETAIL.

NOZZLE SCHEDULE.

NOZZLE REF.	SERVICE	SIZE & DESCRIPTION.
N1	WATER/OIL IN	2½ NB CLASS 300LB R.F. S.O. ANSI FLANGE
N2	WATER/OIL OUT	"
N3	COOLING WATER IN	1" NB CLASS 300LB R.F. S.O. ANSI FLANGE
N4	COOLING WATER OUT	"

DESIGN DATA.

DESIGN CODE	TEMA C	
	SHELL SIDE	TUBE SIDE
CORROSION	1/16"	1/16"
STRESS RELIEF	NONE	NONE
RADIOGRAPHY	SPOT RADIOGRAPHY	SPOT RADIOGRAPHY
DESIGN TEMP.	327°C	327°C
METAL TEMP.	55°C MAX.	35°C MAX.
HYDRO TEST PRESS.	652·5 PSI	60 PSI
JOINT EFFICIENCY	0·8	0·8

REV.	BY	DATE	CH'KD	DESCRIPTION
7				
6				
5	H.F.	12.5.84		SHELL SIDE DRAIN DRAWN IN, ALL TUBE SIDE VENT + DRAIN CONNECTIONS OMITTED. THIS IS AS BUILT FINAL REVISION.
4	H.F.	12.1.83		SADDLE SUPPORTS ROTATED THRU 90°. ORIGINAL VENT + DRAIN CONN'S IN SHELL + CHANNEL TO BE PLUGGED. NEW SHELL DRAIN ADDED.
3	A.W.	11.11.80		½" TUBES WERE MADE AVAILABLE ON SPECIAL ORDER. THEREFORE REPLACED ¾" OD TUBES, AS PER INITIAL DESIGN
2	A.W.	30.10.80		BAFFLE & TUBE ARRANGEMENT CHANGED. + OTHER DIMENSIONAL ALTERATIONS
1	A.W.	26.10.80		DIMENSIONAL ALTERATIONS.
0	A.W.	15.10.80		FOR CLIENT APPROVAL.

CASTLETREE ENGINEERING LTD.
THIS DRAWING IS THE PROPERTY OF CASTLETREE ENGINEERING LTD. IT MUST NOT BE COPIED, USED OR REPRODUCED WITHOUT THE WRITTEN CONSENT OF CASTLETREE ENGINEERING LTD.

TITLE: GENERAL ARRANGEMENT OF SHELL & TUBE HEAT EXCHANGERS

SCALE 1:2 | DIMENSIONS IN MM

CASTLETREE ENGINEERING LTD.
28, HADHAM ROAD, BISHOPS STORTFORD, CM23 2QS, HERTS
TEL: 0279-58218. TELEX: 817748

FOR FOSTER WHEELER POWER PRODUCTS LTD.

DRG. No. 80/874-04 REV. 5

Figure 8.8 Scrubber Manifold

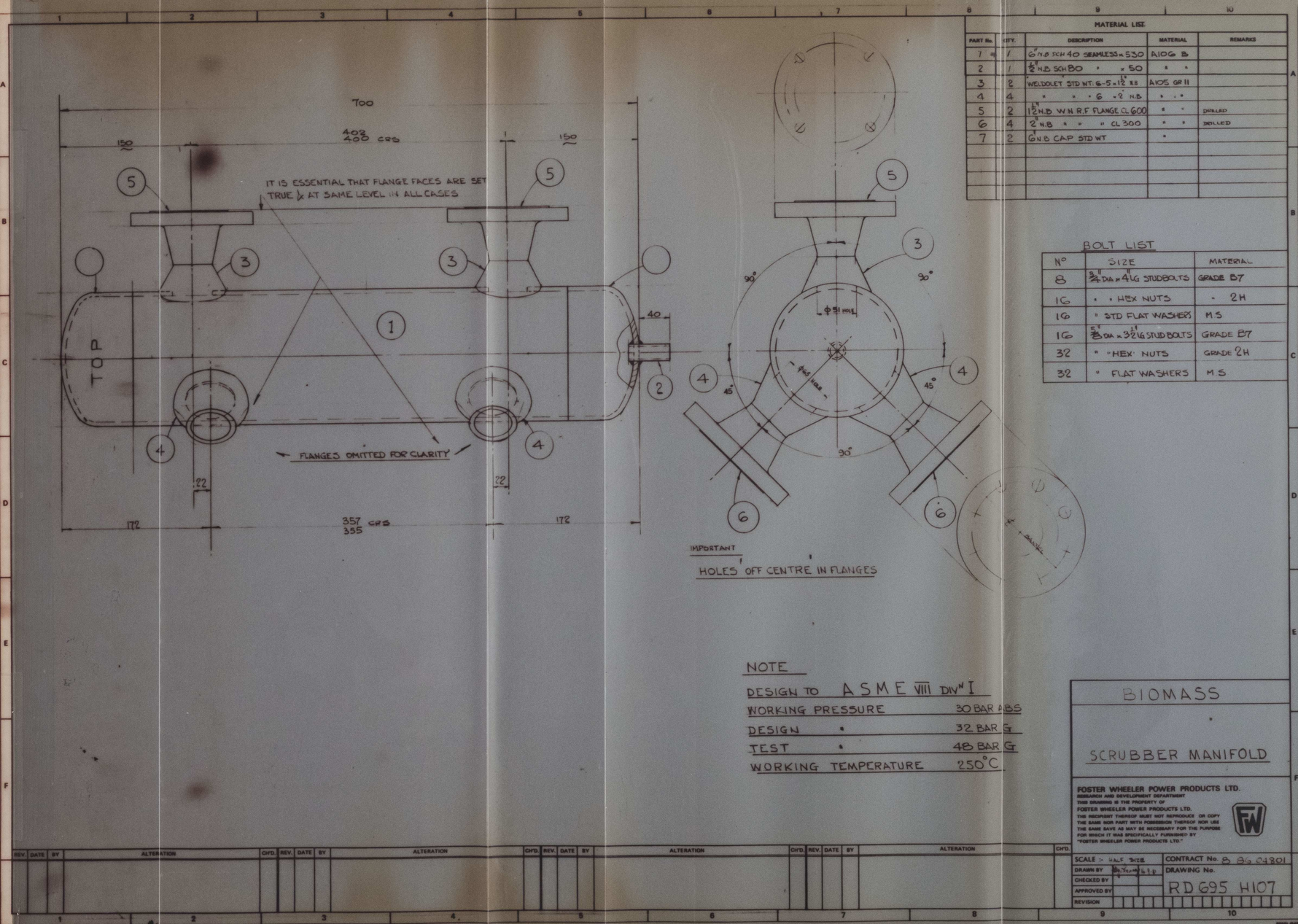

MATERIAL LIST

PART No.	QTY.	DESCRIPTION	MATERIAL	REMARKS
1	1	6" N.B SCH 40 SEAMLESS × 530	A106 B	
2	1	1/2" N.B SCH 80 " × 50	" "	
3	2	WELDOLET STD WT. 6-5-1/2" N.B	A105 GR II	
4	4	" " " 6 × 2" N.B	" "	
5	2	12" N.B W.N.R.F FLANGE CL 600	" "	DRILLED
6	4	2" N.B " " " CL 300	" "	DRILLED
7	2	6" N.B CAP STD WT	"	

BOLT LIST

N°	SIZE	MATERIAL
8	3/4" DIA × 4 1/4" LG STUDBOLTS	GRADE B7
16	" " HEX NUTS	- 2H
16	" STD FLAT WASHERS	M.S
16	5/8" DIA × 3 1/2" LG STUD BOLTS	GRADE B7
32	" "HEX" NUTS	GRADE 2H
32	" FLAT WASHERS	M.S

REV.	DATE	BY	ALTERATION	CHD.

9.0 FURNACE VESSEL

The furnace vessel with attached burner was located on the upstream of the gasification reactor. It was required to fulfil two primary functions:

a) produce hot gaseous products derived from combustion of product gas in the furnace with oxygen or propane in the burner with either air or oxygen; for the biomass pyrolysis pyrolysis and gasification process and

b) act as a mixing vessel for superheated steam and combustion products formed as described in a)

All the input streams to the furnace were to be capable of independent admission, with the exception of propane and the recycled product gas. These would only be operated with the air/oxygen burner. Without reheating, the recycle stream is not capable of gasification by itself due to the low oxidation potential, nor is it capable of pyrolysis due to the low temperature (approximately 100 C). The various streams or mixtures pass from the furnace to the gasification reactor either singly or in combination, to act as the gasification or pyrolysis medium.

9.1 Specification

The furnace vessel is shown schematically in Figure 9.1 which indicates the various separate input streams (including that from the air/oxygen burner). A single output passes from this vessel to the gasification reactor. The vessel specification is summarised in Table 9.1 below.

The branch connection schedule for the furnace vessel is shown in Table 9.2. This is based on the system heat and mass balance and 'reduced' diameters presented in Table 3.2 (chapter 3.0). The furnace requires to be

refractory-lined to maintain the maximum shell temperature at less than 300 C (note:nozzle temperatures have a maximum of 350 C). The small diameter branch surface temperatures are higher than the average shell temperature because, the limited inside cross section restricts access for refractory installation.

TABLE 9.1

Summary Furnace Vessel Specification

Design Pressure:	32 bar g
Operating pressure:	30 bar g
Maximum Operating Temperature:	1200 C
Maximum Surface Temperature:	350 C** (at outlet nozzle)
Vessel Design Code:	ASME VIII Div I
Hot Product Gas from Furnace:	0.648* m^3/s
Branch Connections:	See below
Materials: Shell	BS 1501-224(32B)
Heads	BS 1501-224(32B)
Flanges	BS 1503-224(32B)
Bolts	A193 B7 (2H Nuts)
Pipe	A106 GR B
Refractory Lining:	See below
Radiography:	100% Main Seams

* Pressure 1.013 bar g and maximum temperature 1200 C

** This temperature is higher than surface average-see Table 9.4

TABLE 9.2

Furnace Vessel Branch Connections

MK*	Size	No. Off	Neck	Flange	Remarks
A	18"	One	Sch.140	300lb R.F.W.N+	Blanked off£
B	12"	"	Sch.120	"	To gasifier
C	6"	"	Sch.120	"	S´htd steam
D	4"	"	Sch.120	"	R´cycle gas
E	2"	"	Sch.120	"	Inert gas
F	2"	"	Sch.120	"	Probes
G	2"	"	Sch 120	"	Sight glass
H	1.5"	"	XX STRONG	"	Thermowell

* Mark (reference Peckston Engineering Drg. No. 7138-01 cited as Figure 9.2)

+ Raised Face Weld Neck

£ Subsequently modified for burner : see section 9.3.2

9.2 Evaluation

The vessel was manufactured under sub-contract to Peckston Engineering Ltd. generally in accordance with the above specification. The reasons for sub-contracting this unit were:

a) size:the vessel was too small to manufacture efficiently in the main company workshop due to a mismatch in available machinery and handling equipment.

b) scheduling:the existing workshop procedures were geared to the assembly of very large fabricated structures and pressure parts, interruption of the critical manufacturing line timetables was not acceptable.

c) Cost:as a general rule overhead costs rise in direct proportion to the scale of the manufacturing operation. It was considered that a smaller specialist engineering company would manufacture the furnace vessel cheaper because of lower overhead costs.

There are a number of disadvantages to sub-contracting, in particular, the reduced day-to-day control on progressing work. This became critical when the selected vessel sub-contractor was 'taken over' with a resultant loss in management continuity and an inevitable contract delay. It became necessary to progress the work on a daily visit basis.

9.3 Detailed Design

The detailed vessel design calculations were undertaken by the nominated sub-contractor based on the summary specification given in Table 9.1 and the preliminary design outline shown in Figure 9.3 (this was subsequently amended to comply with the specification given in Table 9.1). The design procedure was essentially the same as that set out for the main reactor vessel and summarised in

Figure 5.6. All the calculations were subjected to scrutiny to confirm accuracy and validate the ASME VIII Div I design methodology followed. In a number of areas it was necessary to provide additional analysis to ensure satisfactory furnace design and performance. The main areas discussed below related to the burner:

a) Nozzle compensation
b) Refractory selection
c) Ignitor arrangement
d) Burner design

9.3.1 Burner Nozzle Compensation

The burner mounting nozzle shown in Figure 9.3 and which was to be located on the 'MK A' 300 lb blind flange referred to in Table 9.2. was checked to establish whether reinforcement was needed at the welded connection to this flange. The requirement for a reinforcement or compensation assessment when making penetrations into pressure vessels, is a basic design tenant and the following procedure is typical of a procedure carried out many times around the whole plant. The key is to ensure that the vessel metal removed in preparing the particular (nozzle), penetration is replaced by weld run (or runs) and/or stiffening, to provide replacement metal of equivalent or greater, pressure resistance. There are a number of options for nozzle fixing and decision making commences usually with the simplest:

a) set-on single weld
b) set-through single or double weld
c) set-through double weld with stiffening ring

Examples of each of the above cases are given in Appendix 9.1 along with the full example calculation steps for the burner nozzle. Initially, it was proposed that this nozzle be 'set on'.

From [9.1] the required weld area $A = dt_r F$ where:

F = joint efficiency factor
t_r = required thickness of flange for pressure in the furnace vessel and
$t_r = d\ ([CP/SE]+1.9WhG/SEd^3])^{0.5}$

Based on the vessel operating conditions outlined in Table 9.1 and the nozzle specification in Table 9.2 then required thickness t_r = 74mm (2.9").

If t_r=t (flange thickness required = actual thickness of flange used) then required reinforcement area:
A = 4020 mm^2 (6.232 in^2).

If the nozzle does not protude into the flange (set-through) there is insufficient reinforcement. The calculation was re-worked on a set-through nozzle arrangement. This resulted in a weld reinforcement area of 1377 mm^2(2.073 in^2) which was still insufficient. A decision was taken to use a stiffening ring. The limit of reinforcement (D_p), was calculated to be 209mm (8.25"). This was found to give a total reinforcement area of 4079 mm^2 (6.323 in^2) which was acceptable. A stiffening ring 209mm (8.25 in) od x 89mm (3.5 in) id x 21.3mm (0.84 in) thick with 12.7mm (0.5 in) welds and a 25.4mm (1 in) projection with 12.7mm (0.5 in) welds was installed.

9.3.2 Furnace Refractory

As discussed in chapter 5.0 refractory lining supply and installation need to be sub-contracted because, specialist experience and techniques are required to ensure perfect lining integrity. In the event that a lining failure was to arise due for example, to cracking, spalling or anchor collapse, with the vessel operating at high temperature and pressure, catastrophic vessel failure could occur. This would be caused by stress-rupture failure of the containing vessel metal. The

full technical lining specification is presented in Appendix 5.3. The refractory construction recommended by the subcontractor and subsequently adopted is shown in Table 9.3 below.

A check calculation was performed in relation to the heat transmitted back to the furnace shell by the oxy-propane burner which operates with a flame temperature of approximately 2000 C. There was concern that the flange temperature might exceed the vessel design temperature of 300 C. Calculations, shown in Appendix 9.2, demonstrated that the flange could lose more heat (59.8 watts) than is transmitted through the burner tube (45.7 watts) but the small loss margin would probably be erroded if the burner nozzle were to be externally lagged. This was an important finding for reasons previously outlined. It demonstrates the value of careful analysis coupled with simple calculations.

TABLE 9.3

Furnace Refractory Construction

Furnace:	
75 mm	Plicasto 200 (inner 'hot face')
75 mm	Plicasto Verilite 7 R/G
25 mm	Plicasto Airlite
13 mm	4 lbs. density Plisulate Ceramic Fibre (External)
Furnace Outlet Nozzle:	
50 mm	Plicasto 200 (inner 'hot face')
38 mm	Plicasto Airlite
13 mm	4 lbs. density Plisulate Ceramic Fibre (External)

The lining was installed by casting and rolling. The 'hot face' refractory was cast behind a collapsable former to permit a smooth inner surface. The dog-legged expansion joint shown in Figure 9.4, was incorporated into the burner plug to minimize hot gas seepage to the shell wall (labryinth construction). The joint was packed with 6mm vacuum formed ceramic fibre. Figure 9.8 is a view of the burner plug assembly awaiting lining installation.

To assist installation of refractory by eliminating refractory plugging, all small nozzles were fitted with type 18/8 stainless steel extension sleeves. The sleeves were run from the nozzle outlets to the notional (inner) refractory hot face. Figure 9.9 and Figure 9.10 provide some indication of the restricted access in the furnace vessel. On completion of the vessel lining, difficulty was experienced in removing the specially designed formers (shuttering) because the pattern maker had omitted to varnish the wood. The installers failed to note this deficiency, with the result, that water absorbed from the 'green' (uncured) refractory caused the formers to swell

and sieze.

The refractory is held in place by 18/8 stainless steel 'V' anchors tack welded on approximate 230 mm centres to the inside wall of the furnace. Light gauge mesh is fitted over external fibre insulation to retain it.

In addition to supporting the burner(s) (see below) the large, 457mm (18 in)diameter end flange plate served as an access 'manhole' to the furnace vessel. It was necessary to provide such an access due to the very restricted space which would have made installation of the composite insulation virtually impossible in its absence. The manhole also permits examination of the interior furnace lining condition. A refractory plug configured to the furnace labryinth was cast directly onto the flange plate, being held in place by type 18/8 stainless steel 'V' anchors welded to the plate. The furnace labyrinth was cast in place using a specially made former.

The recommended bake-out (thermal curing) procedure for the inner composite lining is given in Table 9.5 below. The bake-out is undertaken using a combination of a hot air heater (low temperature) and the vessel burner (high temperature). Heat transmission figures (provided by the refractory subcontractor) for the furnace are reproduced in Table 9.4 below.

TABLE 9.4

Furnace Heat Transmission

	Hot Face C	Cold Face C	Shell C	Heat Loss K.cals/m^2h
Furnace:	1200	330	97	930
Furnace outlet nozzle:	900	345	101	973

Note: The figures given in the above table are based on

20 C in still air. The calculations are based on flat surfaces. Taking into account vessel geometry the heat loss figures may be reduced by 10% .

TABLE 9.5

Refractory Bake-out Sequence

Step	Activity	time h
1)	Ambient to 120 C at 15 C/h	7
2)	Hold at 120 C for 12 h	12
3)	120 C to 600 C at 30 C/h	16
4)	Hold at 600 for 6 h	6
5)	600 C to normal operating temp at 50 C/h	12
	total	53

9.3.3 Ignitor Arrangement

The ignitor for the burner(s) was required to provide a constant and reliable ignition source for the flammable mixture of gases emerging from the burner. Based on previous experience with a range of fluidised bed combustors and an atmospheric pressure Cross Flow Pyrolyser, a continuous spark device with gas pilot had proven satisfactory; this was therefore adopted. The general arrangement of the ignitor is shown in Figure 9.4 schematically in Figure 9.5 and in position in Figure 9.8. It works on the principal of a high tension voltage transformer creating an electrical discharge between two electrodes. A third electrode detects gas ionisation and hence spark presence. A Cr/Al duplex thermocouple was placed in a 38 mm diameter thermowell set in the furnace gas exit nozzle to the reactor. The site was choosen to moniter flame/furnace temperatures in the furnace outlet/reactor inlet.

The triple electrode assembly and pilot gas supply shown

in Figure 9.4 is mounted on the blind, 457 mm (18 in) diameter furnace flange plate, immediately above the 76 mm in diameter burner support nozzle. This location was choosen as it resulted in the shortest convienient electrode distance to the projected ignition point from the vessel wall. To ensure a positive ignition source, a pilot gas line carries a flammable mixture of propane and air to the electrode tips. This mixture is delivered from twin (backup) supply bottles of both compressed air and propane, through a 6.3mm diameter, type 18/8 stainless steel tube. The tube is packed with stainless steel wool to eliminate the possibility of back ignition (Davy-lamp principle). An independent pilot supply was considered necessary for safety, because the main works gas/air supply was occasionally interrupted. The electrodes are secured in the flange plate by 12.7mm (0.5in) N.T.P. threaded 'Gulton' gas and pipe sealing glands. These glands are particularly useful in minature sealing applications involving high temperatures and pressures, because of their low leak construction. To prevent electrical shorting, the electrodes were located in hollow alumina tubes and isolated from the surroundings by a rigid stainless steel sleeve. The stainless steel sleeves were cast into the refractory block.

Both the electrode connections and the H.T. ignition transformer were screened from the local environment by an inert gas purged steel enclosure. This enclosure serves two purposes:

a) personnel protection from H.T. electrical hazard and
b) reduced possibility of an ignition source in the event of a flammable gas escape

Due to the limited flow of inert gas necessary, only a one way inlet inert gas supply was provided. The enclosure was fitted with a rubber seal and scavange bleed valve. Prior to starting the ignitor the scavange valve would be manually depressed to purge the enclosure.

9.3.4 Burner Design

The furnace burner was required to supply heat to the gasification plant for a number of purposes:

a) refractory curing (Furnace, Main Reactor and POX)
a) thermal conditioning (refractory soaking) of the system units in a) prior to admitting feed to the main reactor
c) provide additional steam superheat
d) combustion tests on recycled product gas

Initially, an oxy-propane burner was proposed for use, as combustion products would be free from nitrogen (N_2). For both synthesis and fuel gas applications N_2 would act as a diluent. As the project progressed the fuel gas option was developed, resulting in a decision to have two separate burners the second burning air and propane.

For reasons which are in chapter 10.0, the steam superheat option was given only limited examination (product gas contamination) and would only be used if steam superheat temperatures in excess of 800 C were to be considered.
A simple air-propane burner was manufactured as shown in Figure 9.6. This burner was to be used for low pressure fuel gas production trials, although it was designed to withstand a system operating pressure of 30 bar a. The high design pressure of 32 bar g would allow it to act as a flange seal when out of service. The burner was manufactured in type 18/8 stainless steel and designed with a 76mm (3") diameter 136kg(300 lb) RFWN flange to mate up with the similiar 76mm (3") diameter flange on the furnace burner nozzle through a trapped Metaflex, spiral wound, type 18/8 stainless steel gasket.

Filtered and lubricated works compressed air is delivered via a flowmeter to the burner tip along the concentric annulus (air cooling). Propane would be metered in through the burner centre tube. Respective gas flows would be set

using a double block and bleed solenoid valve arrangement which permits flow setting to the plant vent line, prior to admitting the gases to the furnace, where ignition occurs.

Despite their widespread use in welding applications oxygen-gas burners are potentially hazardous. Pure oxygen supply is also a critical area because of the difficulties in detecting leaks. As a result of the uncertainties, a decision was made to subcontract the whole of the oxy-propane burner supply and control system to British Oxygen Ltd (BOC) who specialise in this equipment. The oxy-propane burner is shown in position on the furnace in Figure 9.7.

Based on the heat and mass balance information given in Table 3.1 (chapter 3) BOC provided and installed a supply consol for the safe supply and control of oxygen to an oxy-propane burner of their design. The oxygen flow metering panel will provide a maximum flow rate of 500 SCFH at pressures up to 5 bar g; the panel is designed to withstand and if necessary relieve a back pressure of 30 bar g from the furnace. A maximum delivery pressure of 5 bar g was specified for the initial trials, to minimize the potential hazards of working with pure oxygen and carbonaceous feed in an experimental facility. It was intended, subject to experimental validation, that the maximum burner operating pressure would be raised to 10 bar g if required.

Provision was made on the product gas recycle line, for possible combustion trials involving the oxy-propane burner. A 76mm (3") diameter schedule 120 nozzle with a 136kg (300 lb)RFWN flange was welded to the recycle gas line and blanked off. The recycle gas line passing to the furnace can be manually isolated to divert the gas flow to the burner via a non-return and further manually operated isolation valve.

The panel was fitted with a number of voltage free contacts so that the flow of oxygen can be tripped out by a number of fault conditions arising in the plant. A diverter valve complete with limit switches and lock was also supplied for use with the POX system. The diverter valve unit operates in a block and vent mode. It has two Worcester ball valves and an operating handle linking the valves and two locks. To operate the diverter, the untrapped key is inserted into one lock, the handle is moved across and the second key removed. The untrapped key is retained by the nominated keeper. The change over would not be done whilst oxygen is flowing.

The oxy-propane burner assembly supplied by BOC was of a gas cooled type and comprised an outer type 18/8 stainless steel fuel gas tube and a similiar inner oxygen tube. The unit bolts to the furnace burner nozzle flange with a common 76mm (3")diameter 136kg (300lb) RWFN flange, trapping a Metaflex spiral wound, type 18/8 stainless steel gasket. It was built to withstand a back pressure from the furnace of up to 30 bar g.

The oxy-propane burner was factory tested under sub-stoichiometric combustion conditions at atmospheric pressure. The burner was supplied with a replacement inner section for experimental verification of its suitability for operation up to 5 bar g. This replacement section was necessary, because of the lack of design information on the performance of oxy-propane flames burning under sub-stoichiometric conditions at elevated pressures. It was intended that flame behaviour would be visually monitered using the furnace sight glass. Provision was made on the product gas recycle line for possible combustion trials involving this burner.

The flow meter for the system was sized for supply of air at NPT. A calculation must be carried out to give the correct flow for oxygen at the nominal running pressure. The correction for increased running pressure is:

$Q_1 = Q_2 ([P_2+P_1]/P_1)$

Where Q_1= True air flow

Q_2= Indicated flow of air

P_1= Atmospheric pressure

P_2= Running pressure

To find the true flow rate of oxygen Q

$Q = Q_2(29.97/32x[P_2+P_1]/P_1)$

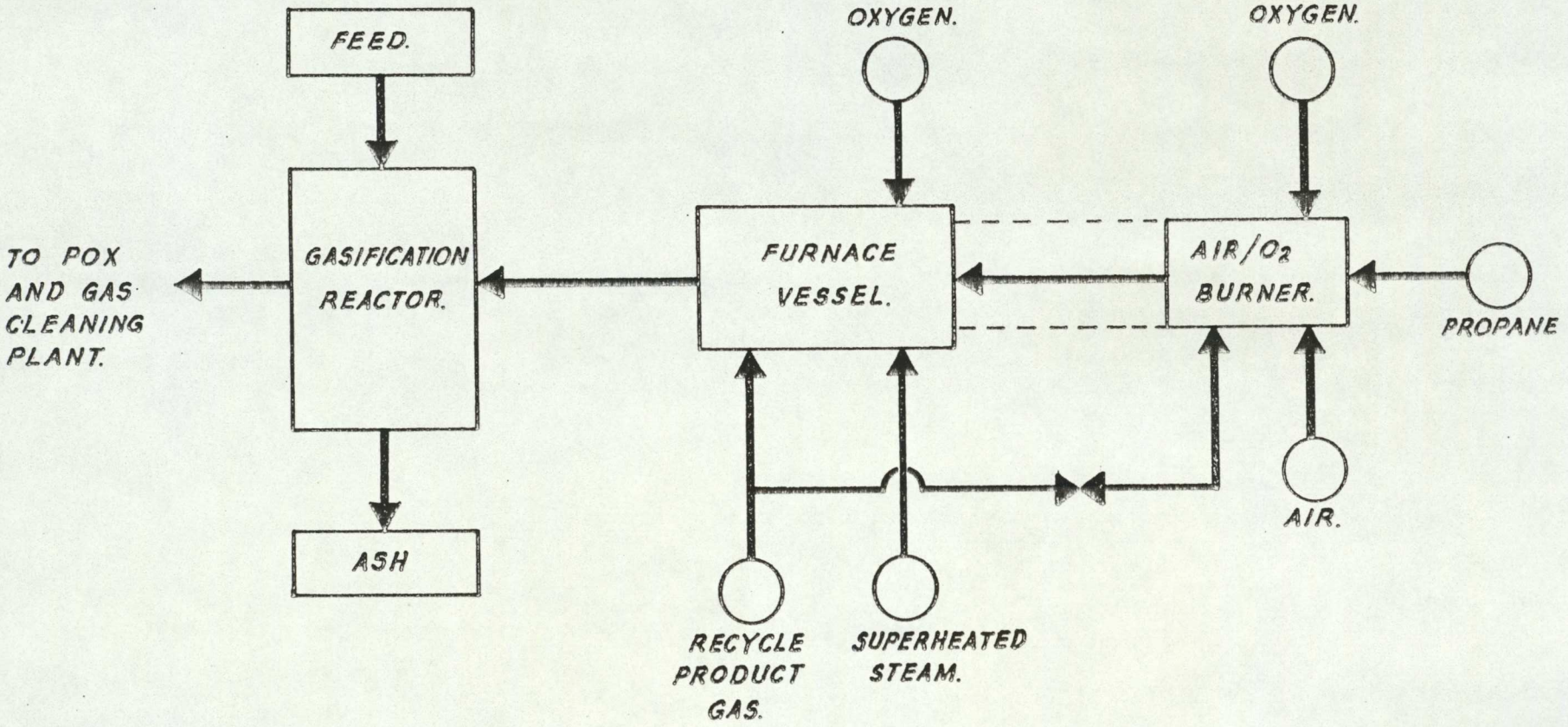

FIG. 9.1- SYSTEM SCHEMATIC SHOWING FURNACE VESSEL

Figure 9.2 Peckston Engineering (Middlesbrough) Ltd

Drawing No. 7138-01



Figure 9.3 Drawing No. RD 695-2

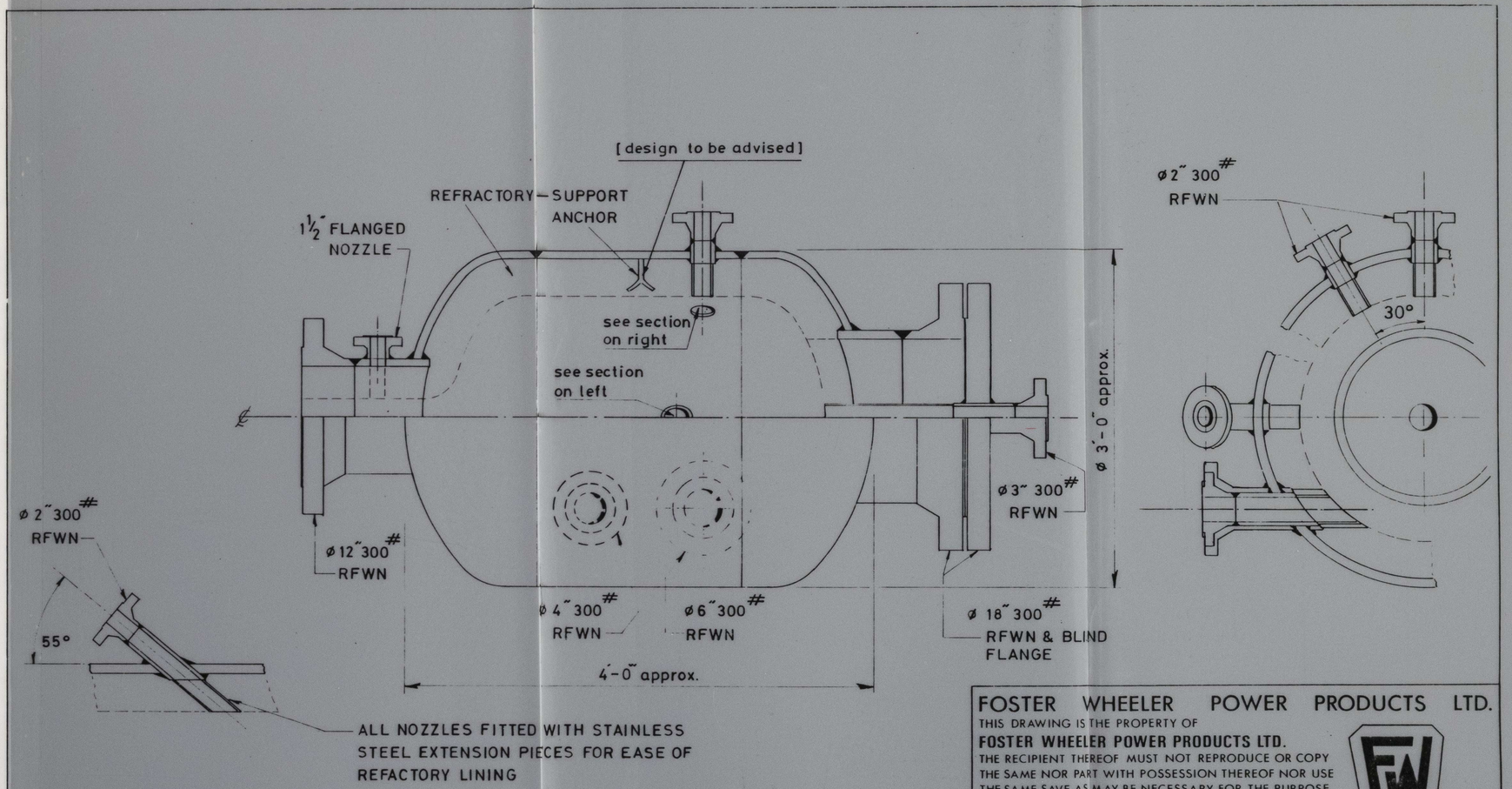

MATERIAL	CARBON STEEL
PRESSURE	30 BAR
TEMPERATURE	250°C MAXIMUM
SUPPORT BRACKETS TO BE INCLUDED	
ALL TO A.S.M.E. STANDARD SECTION VIII DIV. I	
LOCATING DIMENSIONS FOR NOZZLES TO BE ADVISED	

RADIOGRAPHY
LONGITUDINAL SEAMS 100%
ALL OTHER SEAMS SPOT

FOSTER WHEELER POWER PRODUCTS LTD.

THIS DRAWING IS THE PROPERTY OF
FOSTER WHEELER POWER PRODUCTS LTD.
THE RECIPIENT THEREOF MUST NOT REPRODUCE OR COPY THE SAME NOR PART WITH POSSESSION THEREOF NOR USE THE SAME SAVE AS MAY BE NECESSARY FOR THE PURPOSE FOR WHICH IT WAS SPECIFICALLY FURNISHED BY FOSTER WHEELER POWER PRODUCTS LTD.

Nº OF UNITS:			JOB / PART Nº
SCALE: N.T.S.			CONTRACT Nº 8-86-04801
DRAWN BY	R.D.	04.12.80	FURNACE ARRANGEMENT FOR BIOMASS GASIFICATION TEST RIG
CHECKED BY		4/12/80	
APPROVED BY		4/12/80	DRAWING Nº RD 695-2
REVISION	A b c d		

PS 468

Figure 9.4 Proposed Ignitor Arrangement for Furnace Burner on Biomass Gasification Test Rig

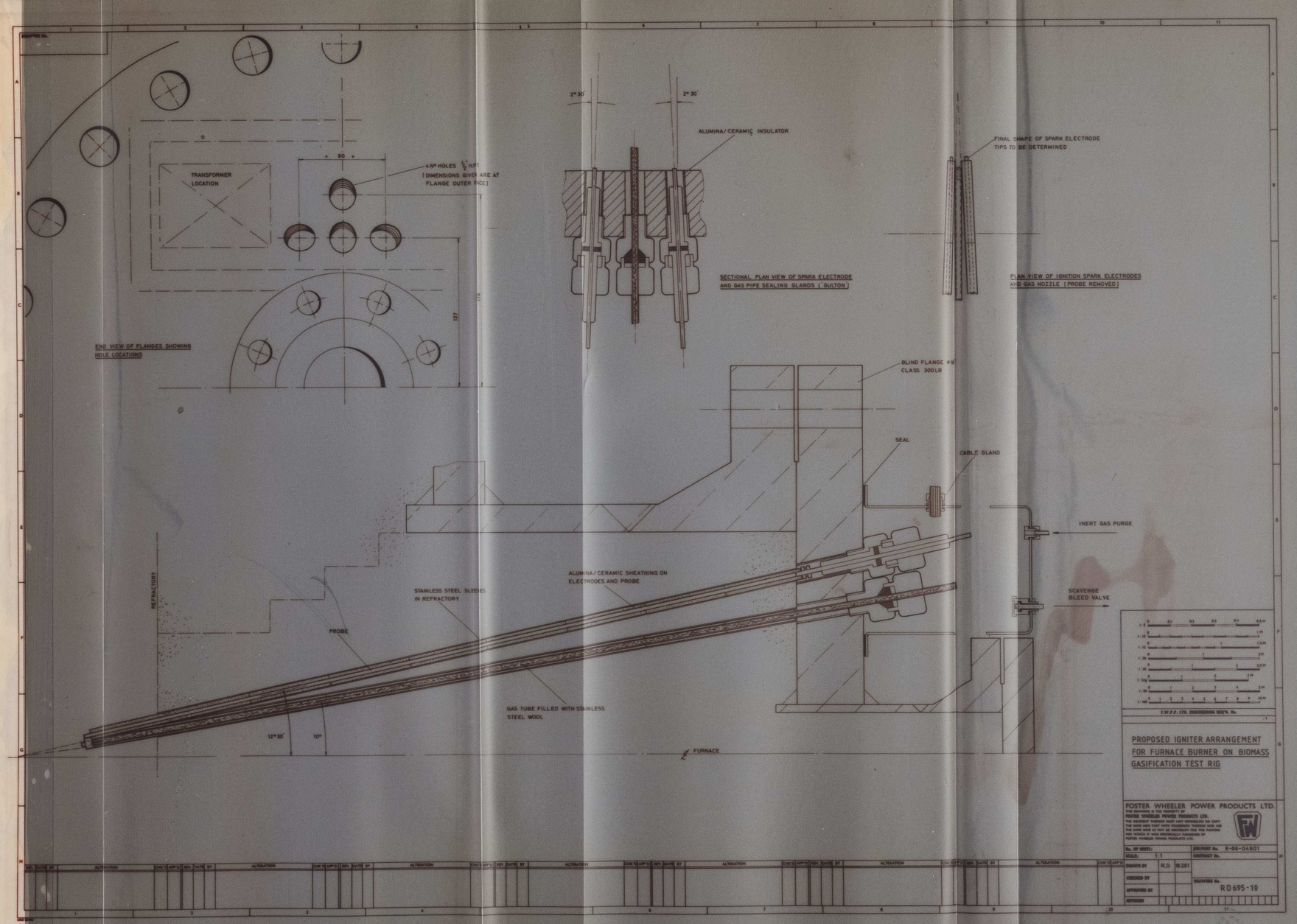

Te : THERMOCOUPLE
FI : FLOW INDICATOR.

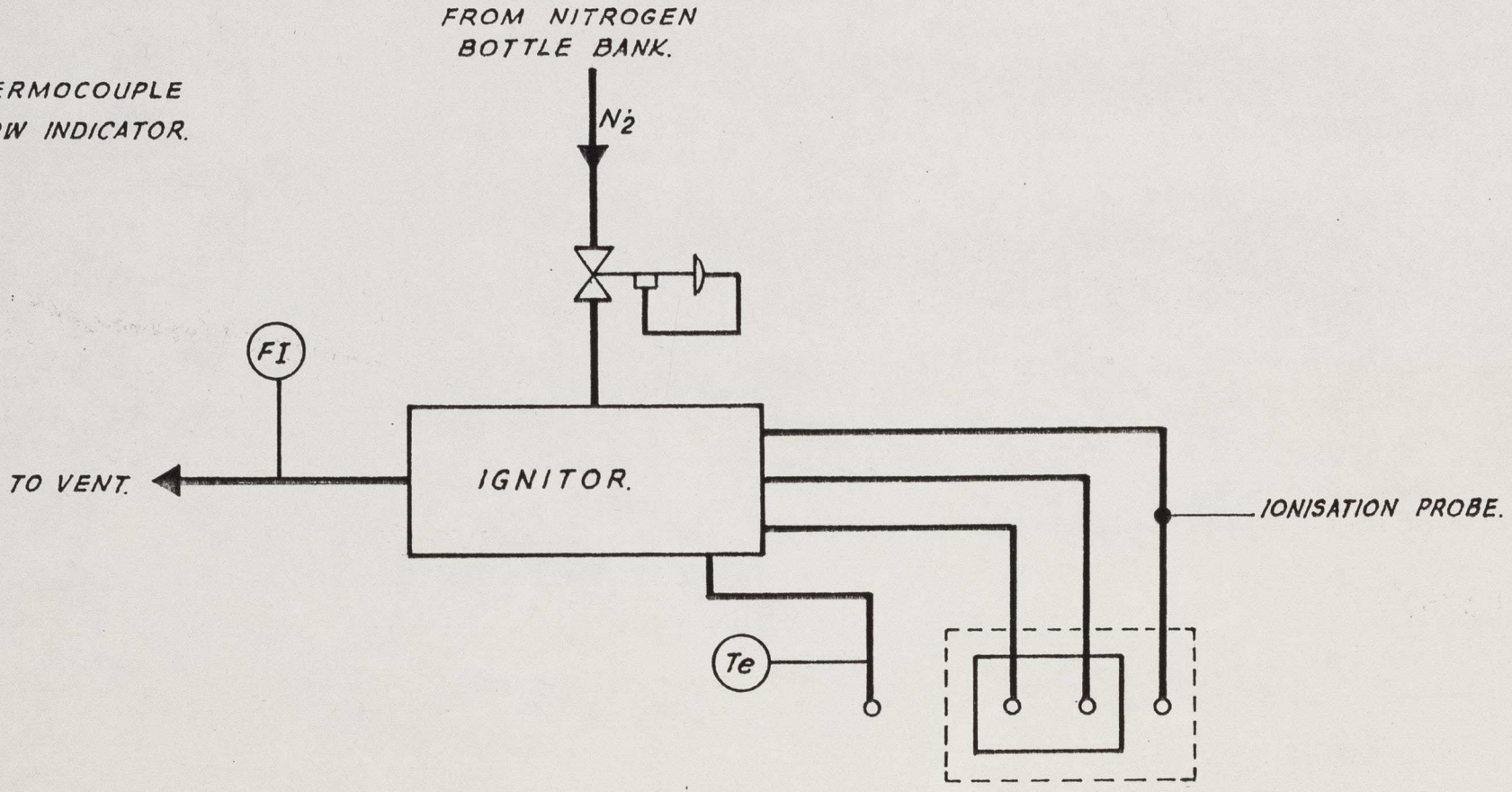

FIG. 9·5 IGNITION ELECTRODES ASSEMBLY.

Figure 9.6 Air-Propane Burner for Biomass Gasification Test Rig

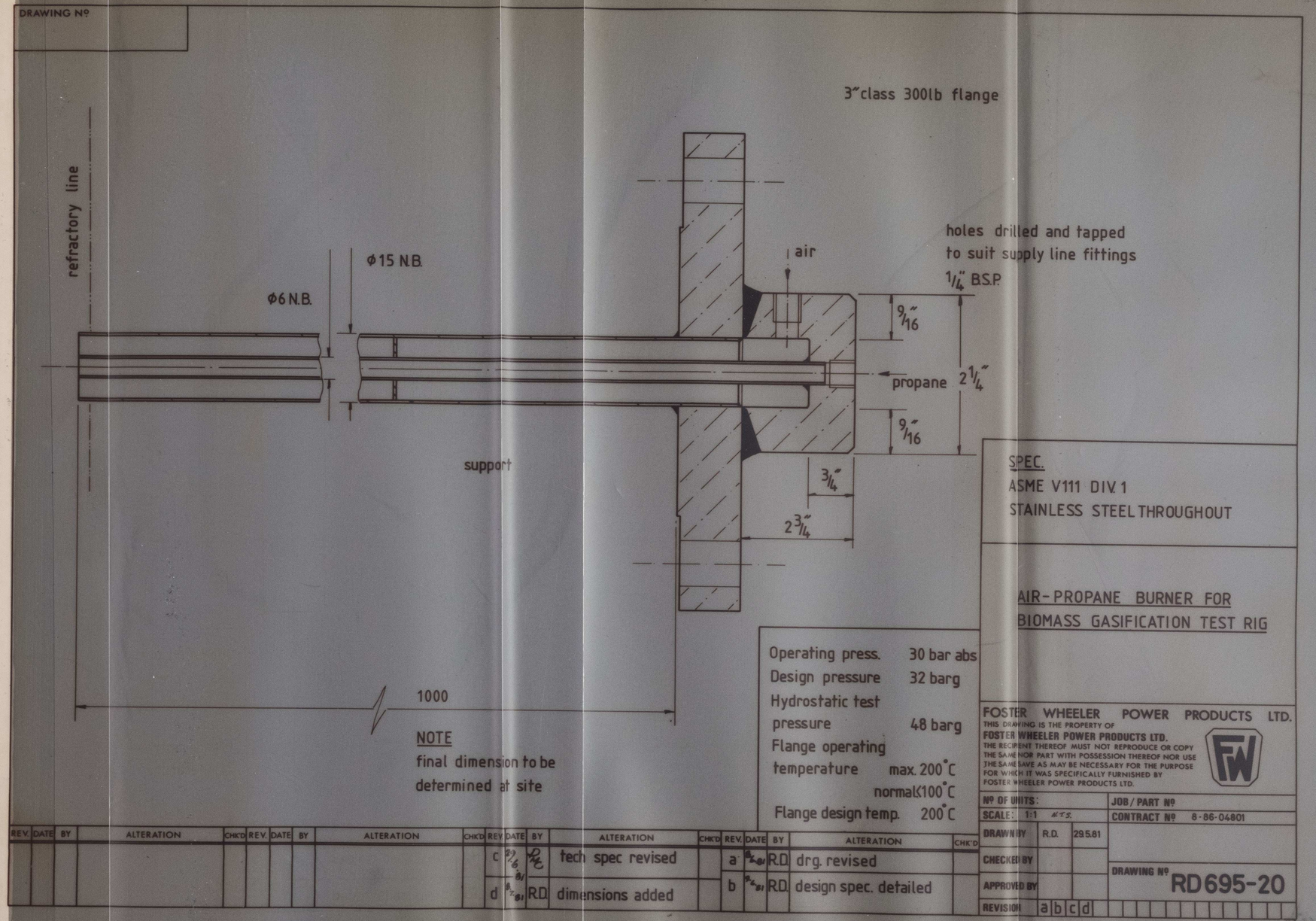

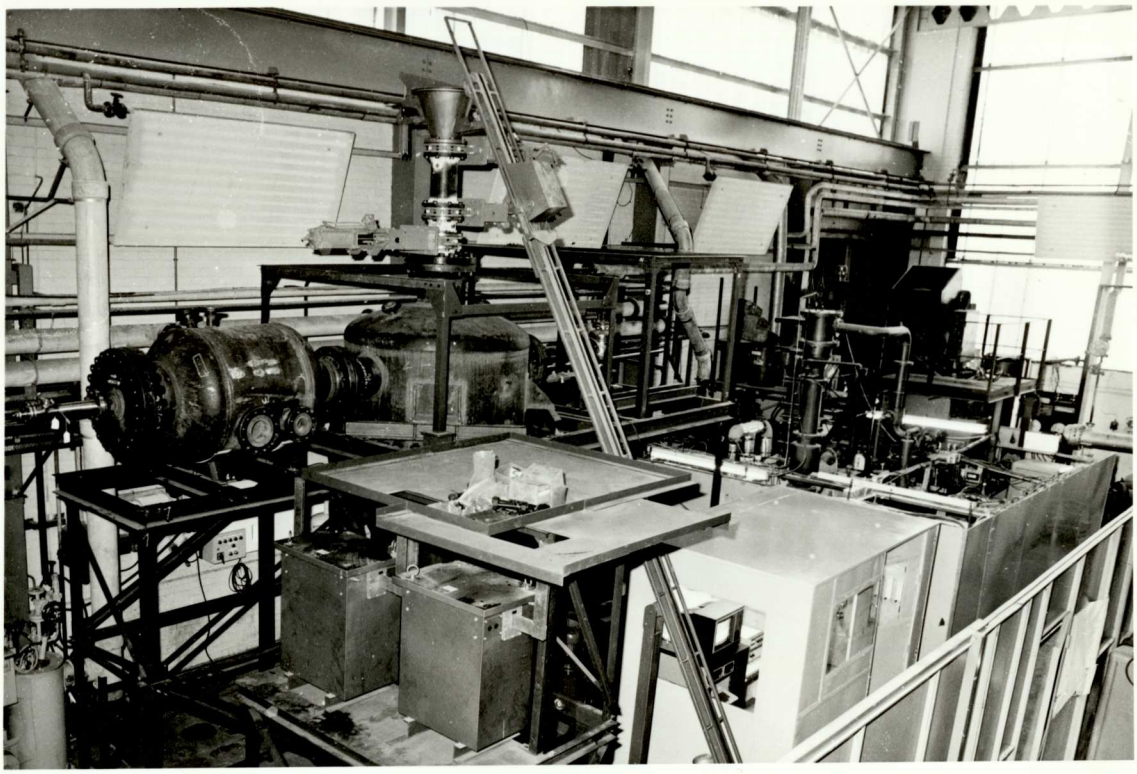

Figure 9.7. View of partially assembled test plant.



Figure 9.8. Furnace vessel burner assembly awaiting lining installation.

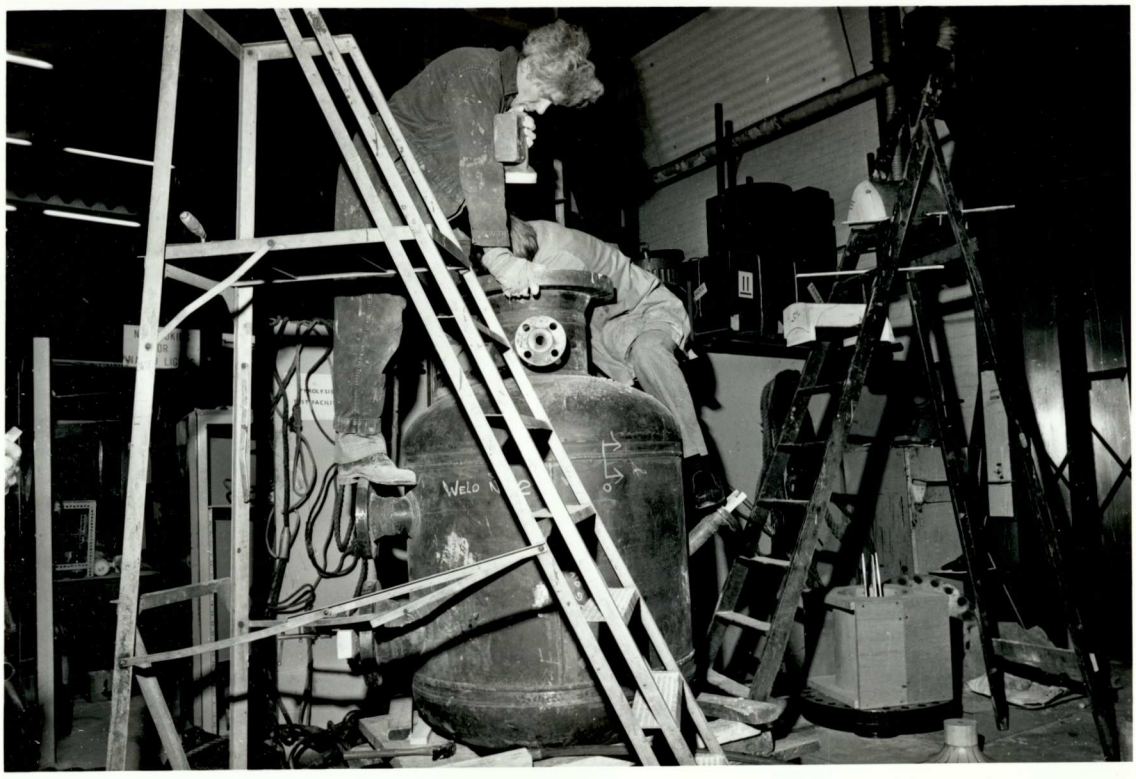

Figure 9.9. Installation of furnace lining.



Figure 9.10. Furnace vessel shuttering.

10.0 STEAM SUPERHEATER

As explained in chapter 2.0, one of the objectives of the programme was to examine steam gasification, for which a superheated supply was necessary. The minimum steam temperature limit for reasonable reaction rates is 600 C and an upper limit of 800 C was set because of recognised thermal and mechanical design problems in heating steam beyond this limit. These problems are discussed below.

10.1 Specification

The steam superheater system shown conceptually in Figure 10.1 was required to provide a continuous supply of process steam at 150 kg/h for gasification reactions, at temperatures up to 800 C and pressures up to 30 bar g (435 lbf/in^2). The plant arrangement shown in Figure 10.1 consists of a steam generater linked to a steam superheater and furnace. Superheated steam is fed to the gasifier from the furnace which acts as a transfer/mixing vessel when not being employed as a second steam superheater (propane burner) to further raise the temperature. The system design needed to allow for the reduction in specific steam volume as the selected plant operating pressure increases. A maximum steam velocity of 50 m/s in the superheater delivery line to the furnace was assumed. The specification is summarised in Table 10.1 below.

TABLE 10.1

Steam Superheater Design Specification

Design code	: ASME VIII Div I
Working pressure (max)*	: 29 bar g
Steam inlet temperature (saturated at 30 bar g)	: 233.8 C
Steam outlet temperature (max)	: 800 C
Design pressure (max)	: 32 bar g
Steam flow rate (max)	: 160 kg/h
Maximum steam velocity	: 50 m/s

* Working pressure variable 2 to 29 bar g

10.2 Options and Evaluation

The requirement to provide superheated steam demanded a careful examination of alternative superheat arrangements to ensure satisfactory performance. Final suitability was decided not only on the technical merits (or otherwise) of the given system but also physical size, cost and manufacturer´s ability to deliver. Sensitive ´secondary´ environmental factors such as noise were also checked. Some of the more important points related to final selection are summarised below.

10.2.1 Options

Four superheater options were examined:

a) Conventional steam plant
b) Electric element (enclosed in pressure vessel)
c) Direct steam injection from boiler to heated furnace
d) Direct electric heating of saturated steam

Some of the relevant features of these options are compared in Table 10.2.

TABLE 10.2

System Comparisons:Superheated Steam

Requirements	Con	E/E	Inj	D/E
High Temperature	N	Y	Y	Y
High Pressure	Y	Y	Y	Y
Steam Purity	Y	Y	N	Y
Flexibility	Y/N	N	Y	Y
Reliability	Y	N	Y	Y
Controlability	Y	Y	Y/N	Y
High Cost	N	Y	N	Y/N

Table key:

Y : yes

N : no

Con : conventional steam plant

E/E : electrical element

Inj : saturated steam injection into furnace

D/E : direct electric heating

10.2.2 Evaluation of Options

Each of the options listed in section 10.2.1 is described and discussed below.

10.2.2.1 Conventional Steam Plant

This option was tentatively considered but the limiting status of conventional technology (375 C at 30 bar a) was such that normal steam raising facilities were unsuitable. They could not provide steam at a high enough temperature without an additional superheat step.

10.2.2.2 Enclosed Electric Element

This option shown in Figure 10.2, involved passing

saturated steam over a heated electric element. The electrical element(s) would require to be housed inside a pressure vessel and due to the aggressive nature of high temperature steam, the expected life of the elements would be short. Also, heat transfer would be poor, requiring a large and complex installation. It was considered to be unsuitable for the subject application.

10.2.2.3 Direct Steam Injection

In this option, saturated steam produced by a package boiler would be fed directly to the propane gas-fired furnace as shown in Figure 10.3. The burner could operate with either air or pure oxygen for higher temperatures and/or avoid product gas dilution with nitrogen. Mixing the steam and combustion products together would result in superheated steam flow to the gasifier. The main disadvantage of such a system is that the gasification medium passing into the reactor would contain indeterminate amounts of a range of combustion and partial oxidation products arising from the fuel firing. It would therefore be extremely difficult to isolate the effects of steam gasification from the other primary and secondary reactions with combustion products and partial oxidation products from burning propane.

In addition to the above; propane is only available as a gas at 30 bar a if heated above 82 C. At elevated pressures the propane supply would have to be passed through an evaporator to ensure that liquid propane was not admitted into the furnace, which would be a further complication and cost.

10.2.2.4 Direct Electric Heating

The direct electric heating arrangement, shown in Figure 10.4, permits steam from a small package boiler to be elevated in temperature. The required level of steam superheat is achieved by direct absorption of heat from

the steam tube, which acts as a heating element. Tubemetal temperatures up to 1000 C are produced. Velocities up to 50 m/s permit efficient heat transfer to the steam from the tube walls. Because of the combination of high temperatures and high pressures Incoloy 800 [10.1] is specified for the tube material.

Steam passes from the boiler to the electrically heated superheater tube bank where superheated steam is formed. Current transformers provide power to the tube bank through a thyristor controlled firing circuit. The transformer output terminals are attached to the superheater tubes by current clamps. Inlet steam from the generator enters the tube bank where it absorbs heat from the tube walls. It exits to the gasifier furnace at temperatures up to 800 C (dependent upon steam supply rate, pressure and velocity).

Based on the above assessment of suitability and previous experience with a similiar system, it was concluded that for the proposed study, the direct electric steam superheater would be the most satisfactory device.

10.3 Detailed design

The superheater system was designed to absorb 70 kW of electrical power (see section 10.3.2). Due to the reduction in specific volume of the steam at elevated pressures, two separate sets of superheater tubes (with the same thermal duty) were required to maintain the specified steam temperatures and mass flow rates under different pressure regimes. The initial tube bank was made up from 31.75 mm diameter (1.25" NB) tube for operation up to 5 bar a, and for the pressure range 10 to 30 bar a 12.5 mm diameter (0.5" NB) tube was selected; this last size was not manufactured. Only one tube bank is installed at any time, to cover the required experimental pressure range (discussed in chapter 14.0). The calculation summary for the tubes is given in Table 10.3.

Calculation procedure is discussed below and a worked example is given in Appendix 10.1.

Each tube bank terminates at the furnace end, with a flanged, concentric thermal sleeve as shown in Figure 10.5 and Figure 10.11. Provision was made within the superheater bank for temperature (Cr/Al thermocouples) and flow measurement (orifice plate in boiler water make-up line). The primary (saturated) steam is raised by firing 35/45 sec. gas oil in a small 'once-through'(no recirculation of condensate) package generator. Superheated steam discharges into the gasifier furnace vessel through an offset flanged nozzle (see chapter 9.0). The tube flanges connect with the furnace vessel by through bolts and a 'Metaflex' asbestos filled stainless steel gasket. The detailed design of the direct electric superheater involved examination of the following areas:

a) Boiler selection and specification
b) Power requirements
c) Heat and mass transfer
d) Busbar current clamps
e) Tee block design
f) Steam pressure drop
g) Materials and stress
h) Insulation
i) Weld effects

Each of these features is discussed in the following sections.

Pressure (bar)	2	3	4	5	10	15	20	30
Tube Size	1¼"NB Sch40	1¼"NB Sch40	1¼"NB Sch40	1¼"NB Sch40	½"NB Sch40	½"NB Sch40	½"NB Sch40	½"NB Sch40
Tube Temp ^{o}C	955	953	949	950	837	823	828	821
Exit Steam Temp ^{o}C	800	800	800	800	700	700	700	700
Total Length of Tube (m)	15.4	15.4	15.4	15.4	7.52	7.52	7.52	7.52
Maximum Velocity of Steam (m/s)	50	50	50	43	50	50	50	36.4
Mass Flow (kg/hr)	70	105	140	150	65	98	130	150

TABLE 10.3

SUPERHEATER TUBING DESIGN SUMMARY

10.3.1 Boiler Selection and Specification

Based on operational experience with the cross-flow pyrolyser [10.2] a ratio of 4:1 (gasification gas rate : gasifier feed rate) was choosen as a key system design parameter. This (variable) ratio resulted in procurement of a model 150 Vaporax Steam Generator (Appendix 10.4) with a working pressure of 32 bar and capable of delivering 161 kg/h of steam at 0.9 dryness fraction to the gasifier (reactor design feed rate 40 kg/h therefore required steam/gas rate to reactor = {4x40} or 160 kg/h). Saturated steam temperatures entering the superheater tubes are dependant upon pressure and vary between 120.2 C at 2 bar a and 233.8 C at 30 bar a.

10.3.2 Power Requirements

Specification of the direct electric superheater commenced with an approximate assessment of the power input requirement to the tube bank:

Pressure	= 2 bar a
Outlet temp	= 800 C
Inlet temp	= 120 C
h^+ outlet	= 4157.8 kJ/kg (above conditions)
h_g sat'd gas	= 504.7* kJ/kg
h_f sat'd liquid	= 2706.3 kJ/kg
h inlet	= $(1-x)h_f + h_g$
	= (1-0.9)504.7 + 2706.3
	= 2486.14 kJ/kg
Flow 150 kg/h	= 0.042 kg/s
Heat load required	= (0.042)(4157.8 - 2486.14)
	= <u>70.209 kW</u>

* Dryness fraction

$^+$ = Enthalpy (from steam tables)

As this heat load approximately matched the available (uncommitted) power supply in the test rig building, it wasused as the power specification load in preliminary

calculations. It was subsequently adopted as an upper limit for formal thermal design. For estimating purposes, a thermal and electrical efficiency of 100% was assumed.

10.3.3 Power Supply

Based on vendor information and recommendations [10.3], a 415 V to 180 V step-down Scott wound transformer (see Appendix 10.6) was selected to provide power to the superheater tubes as shown in Figure 10.6. The 180 V secondary output is fed to two further 180V to 20V step down current transformers (load sharing) via phase angle fired thyristors. The output from the current transformers is taken to the superheater tubes by current clamps. Figure 10.6 is a diagramatic representation of the power circuit. The transformer staging shown in Figure 10.13 was designed to support the stated weight of 900 kg (see Appendix 10.6 and Chapter 11.0).

10.3.3.1 Calculation of Superheater Tube Length

With reference to Figure 10.7 and Figure 10.14:

Secondary voltage = 19.6 V
Maximum available power = 70 kW. (Design for this)
Assume worst case Incoloy 800 tube resistivity taken at average tube temperature of 600 C
Resistivity = 122.75 $\mu\Omega$cm

The superheater load is shared between the two current transformers respectively designated a and b.

For total load of 70 kW
$R_a = R_b$ (total winding resistance)
$r_1 = r_2 = r_3 = r_4 = r$ (tube section resistance)
$P_a = P_b$ (absorbed power)
$I_a = I_b$ (current flow)
Treating sections a + b separately:
Power = V^2/R

$R_a = V^2/P_a = (19.6)^2/35$

$= 0.01098\,\Omega$

$1/R_a = 1/r_1 + 1/r_2 = 2/r$

$r = 2R_a = 2\,(0.01098)$

$= \underline{0.02195\,\Omega}$

Cross sectional area of pipe wall:

$= \pi/4\,(d_o^2 - d_1^2)$

$= \pi/4\,([0.04216]^2 - [0.03505]^2)$

$= 0.0004312\,\Omega m^2$

Resistance of pipe material

$= 1/\{0.0004312\,(122.75 \times 10^{-6} \times 10^{-2})\}$

$= \underline{2.847 \times 10^{-3}\,\Omega/m}$

Resistance required / leg (r) = $0.02195\,\Omega$

Length required / leg (r) = $0.02195/2.847 \times 10^{-3}$ m

= 7.71 m

<u>Total length steam path (4r) = 30.84 m</u>

Specific steam volume decreases as pressure increases. It was therefore necessary to design for installation of smaller diameter tube for high pressure operation, to maintain high steam velocities for good heat transfer. The tube length was recalculated as above for 12.5 mm diameter ($^1/_2$" NB) tube, to give a new total steam path length of 11.5 m.

Due to the long steam path for the 1.25" NB superheater tube and the restricted space, the tube had to be 'folded' and stacked on support staging convenient to the current transformers and also the furnace vessel to which it is attached. Large curvature bends were used to avoid tube thinning. Figure 10.22 shows the 1.25" NB coil details and general arrangement. Figure 10.12 is a further general arrangement showing details of the superheater support staging. Figure 10.15 is a view of the superheater tubing being installed and Figure 10.16 is a general plant view showing the lagged superheater and transformers.

10.3.4 Heat and Mass Transfer

The thermal load for the superheater tubing required an iterative calculation procedure as shown diagrammatically in Figure 10.8. This calculation procedure is as follows:

a) Select operating pressure and tube diameter for the superheater
b) Calculate specific steam volume 'v'
c) Assuming maximum allowable velocity of steam in tubes 50 m/s, calculate mass flow rate 'm' and heat load 'Q'
d) Assume a tube/steam temperature gradient 'T_g' and calculate the average tube temperature 'T_e'
e) Calculate the heat input to steam based on the calculated tube length L
f) Calculate the specific mass flow rate 'G' kg/m^2h and the steam average temperature 'T_a'
g) Calculate $R_e = \varsigma dv/u$ and find j_H [10.4]
h) Calculate $[C_p \mu/k]^{0.33}$
i) Calculate $[\mu/\mu_w]^{0.14}$
j) Calculate $h_i = j_H k/d[c_p\mu/k]^{0.33}[\mu/\mu_w]^{0.14}$
k) Calculate tube temperature gradient
   dT=[heat input to stream/Ah_i]
   and tube temperature $T_t = (T_a - dT)$
l) Compare T_t with T_g if there is no significant difference then proceed to the next calculation. If there is a difference then recalculate using a different value for T_g. Repeat to convergence.

A summary of the relevant calculations related to the superheater design is given in Table 10.3 and a specimen calculation for one case, based on tube pressure of 2 bar a and 32 mm diameter (1.24"NB) tube is shown in Appendix 10.1. A simple computerised procedure was developed to reduce the burden involved in executing multiple iterative calculations. Based on a series of input statements, the program calculates the average superheater tube temperature, the power demand and the maximum superheater tube temperature. The program listing and an example

output for an operating pressure of 2 bar a, is given in Appendix 10.5.

10.3.5 Busbar Clamps

In order to transfer power from the transformers to the superheater tubing Busbar clamps (current clamps) were required. Transformer current is fed into two separate parts of the tubing as shown in Figure 10.6 and Figure 10.7 with three earth connections. To prevent the transformers overheating at the Busbar connection points the clamps were designed with surface cooling fins. A fin configuration of 40 mm wide by 170 mm long by 3mm thick was selected (partially dictated by the transformer terminals. A thermal assessment was undertaken to establish the potential fin heat loss. The calculations shown in Appendix 10.2 demonstrate that the heat conduction rate limits the quantity of heat transferred through the Busbar blocks. The heat loss from 12 fins was estimated to be 1.5 KW and neglecting heat generated, the heat transfer rate was found to be 1.65 Watts/ C. Heat conduction rate was calculated to be 0.9 Watts/ C. Check calculations were also done to estabish whether the clamps in the cooler tube locations needed fins.

Figure 10.10 gives details of the final Busbar clamp design. The clamps were made from Incoloy 800 H except for the fins which were fabricated from mild steel plate. The specialist sub-contractor, familiar with the properties of Incoloy 800, who was appointed to manufacture the clamps experienced significant difficulties in working with the Incoloy 800 H due to its great hardness. It was found necessary to relax the machining specification to complete the job.

10.3.6 Tee Blocks

Tee blocks were required to connect the respective sections of superheater as shown in Figure 10.11. The

blocks shown in Figure 10.9 were designed to mate the respective tube sections. Thermowells were located in the blocks to allow temperatures to be monitored. The Tee blocks were made from SB 408 H. The superheater tubes were welded into the blocks.

10.3.7 Materials and Stress Analysis

Detailed stress analysis was undertaken for only one of the two nominated tube sizes (see Table 10.3) as only the first size was manufactured (31.75 mm diameter [1.25"NB]). If the experimental work had progressed, the additional calculations would have been performed for the second.

A primary concern related to superheater tube performance, was that the tube temperatures were in the creep range. The potential creep had to be compared to 'permissible' creep as specified in the ASME VIII design code.

The following example calculation was undertaken for each of the proposed operational pressures with the first tube size:

Actual stress $S = P(D_o/2t-0.4)$ [ASME VIII 1-1]
$D_o = 1.66"$ and $t = 0.14"$
For P = 2 bar a = 1 bar g = 14.5 psi
$S = 14.5(1.66/2x0.14-0.4)$
$S = \underline{80.16 \text{ psi}}$

Maximum tube temperature = (800+40) = 840 C (1544 F)
At 840 C, for a creep rate of 0.00001%/h the permissible stress is 1900 psi [ASME VIII Appendix P]
The calculated stress of 80.16 psi is well below this giving a rupture life in excess of 100,000 h.
According to [10.4], at temperatures in the creep range the maximum allowable stress value must not exceed the lowest of:

either

a) 100% of average stress for a creep rate of 0.01%/1000 h

or

b) 67% of average stress for a rupture at the end of 100,000 hours.

or

c) 80% of minimum stress for a rupture at the end of 100,000 hours.

In the case of Incoloy 800 H [10.5] for a service temperature of 980 C, (the nearest value to 840 C), then for a) and c) above:

i) Average stress for 0.001%/1000 h = 4.3 N/mm^2

ii) Minimum stress to produce rupture at 1000 h = 4.4 N/mm^2

The lowest stress is therefore 4.3 N/mm^2 (623.5 psi).
The cases analysed are summarised in Table 10.4 below.

TABLE 10.4

Superheater Stress Ratings

Pressure bar g	O/Ltemp C	max tube temp C	tube stress psi	50% S/R	10^{-4}% CF
1	800	839	80.16	1645	1693
2	800	842	160.33	1601	1688
3	800	844.4	240.5	1566	1684
4	800	843.3	320.7	1583	1686
5*	-	980	400	638	623.5

* Test case above

O/L temp = superheater tube outlet temperature

50% S/R = 50% of average stress for rupture

10^{-4}%CF = 0.00001% creep failure

It can be seen that for all the conditions examined, the tube stress at maximum tube temperature is below the tube rupture and creep failure stress.

10.3.7.1 Hydrostatic Pressure Test

The 32 mm diameter (1.25"NB) superheater tube was subjected to a hydrostatic pressure test to ensure operational integrity. As previously noted, both Incoloy 800 and Incoloy 800 H were employed in the construction of the superheater. For the hydrostatic test it was assumed that only Incoloy 800 was used due to its higher F ratio, calculated from data in Table 10.5 as shown below.

TABLE 10.5

Incoloy Design Stress Data

	Temperature C		
* psi	20	520	840
Incoloy 800	18700*	18700	18300
Incoloy 800 H	16200	16000	15100

F = $\frac{\text{allowable stress at test temperature}}{\text{allowable stress at operating temperature.}}$

F_1 for Incoloy 800 = (18700/18300) = 1.022
F_2 for Incoloy 800 H = (16200/15100) = 1.073

Working pressure = 5 bar g
Maximum working pressure = (1.1x5)= 5.5 bar g
Hydrostatic test pressure = ($5.5 \times 1.5 \times F_2$)
= 8.85 bar g (128 psi)
Hydrostatic tests were carried out at 9 bar g (130 psi)

10.3.8 Insulation

Insulation for the superheater tubing was required to

minimize heat loss and for personnel protection. Discussions took place with a specialist thermal insulation company, who suggested using mineral wool (6 lb/ft^3) up to 600 C and a combination of 1" ceramic fibre (6 lb/ft^3), and mineral wool at the high temperature. Table 10. below gives the heat loss in W/m for various thicknesses of insulation (Vendor data [10.6]).

A requirement of the insulation was that thermal expansion of the selected medium be as low as possible, so as to avoid any possibility of air paths being formed. A further requirement was that the chloride content of the selected insulation should have a maximum of 10 p.p.m. to avoid stress corrosion in the superheater tubes, paricularly in the 400-600 C region. Generally, aside from special orders, fibrous insulations were found to have chloride contents in the order of 50 - 100 p.p.m. To avoid the difficulties of delayed delivery and purchase of high cost low chloride insulation, the industry practice of wrapping stainless steel piping in the critical low temperature zone with aluminium foil, was adopted. This is shown in Figure 10.15.

It was recommended by the Vendor that the thicknesses of insulation shown in Table 10.7 be used. The surface temperature shown in Table 10.7 were based on an ambient temperature of 20 C and either no finish or a painted metal finish. They would be 6 - 8 C higher for a galvanized or stainless steel finish. Using the data in Table 10.7 a composite lining was installed with a 4" thickness at the low temperature end of the superheater tubes and an 8" thickness (2 x 4") at the hot end. Figure 10.16 shows the completed insulated superheater tubes.

10.3.9 Superheater Tube Welding

The effects of tube welds were examined in relation to superheater performance. It was assumed that the tube cross sectional area (CSA) through a welded butt joint

would be approximately 26 per cent greater than the original tube CSA (estimated from weld cross section contour).

Resistivity of Incoloy 800	= 122.75 $\mu\Omega$cm
CSA of tube wall	= .0004312 m^2
CSA at weld peak	= .0006205 m^2
Resistance of tube material	= $122.75 \times 10^{-8}/4.312 \times 10^{-4}$
	= $2.847 \times 10^{-3}\Omega/m$
Resistance of welded section	= $122.75 \times 10^{-8}/6.205 \times 10^{-4}$
	= $1.978 \times 10^{-3}\Omega/m$

Over a tube section of 1 mm resistance will change from 2.847Ω on the tube to 1.978Ω on the weld.

This represents an approximate resistance change of 30 per cent. The change in resistance will give rise to cool spots on the tubes during operation of the superheater. The thermal conductivity of Incoloy is relatively poor, but as the maximum width of weld is only 3-4 mm at the tube surface the degree of cooling was considered to be negligible. Reduction in overall tube leg resistance was not considered important since all legs have the same number of welds (symmetrical array see Figure 10.11) and any discrepancies will be swamped by differences in leg resistivities due to differing leg temperatures.

An example of a typical weld procedure for open butt welding of Incoloy 800 tubes is given in Appendix 10.3. Such procedures were prepared, or available from in-house data files, for all the welding requirements on the test plant.

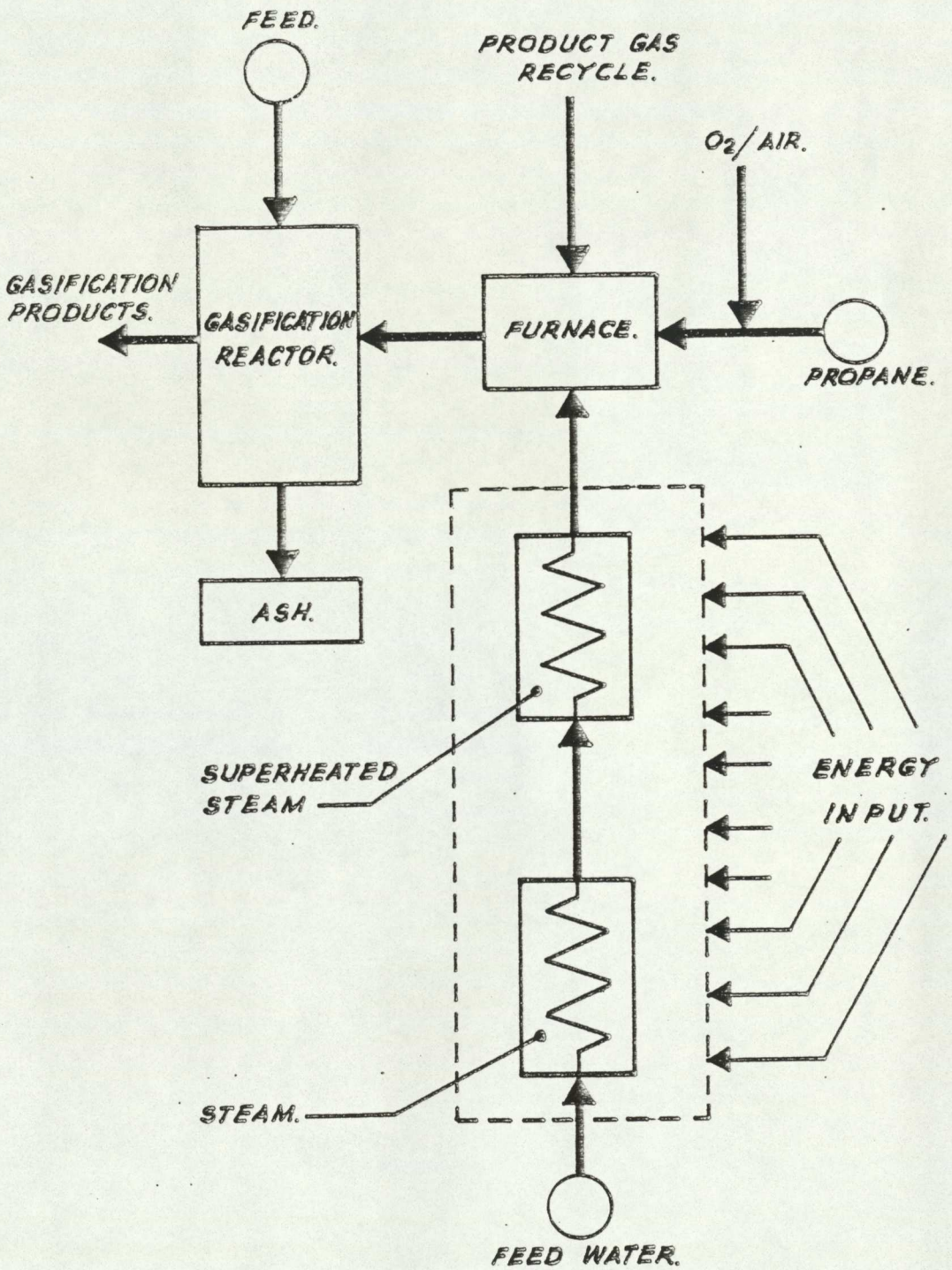

FIG. 10.1 - STEAM SUPERHEATER SCHEMATIC

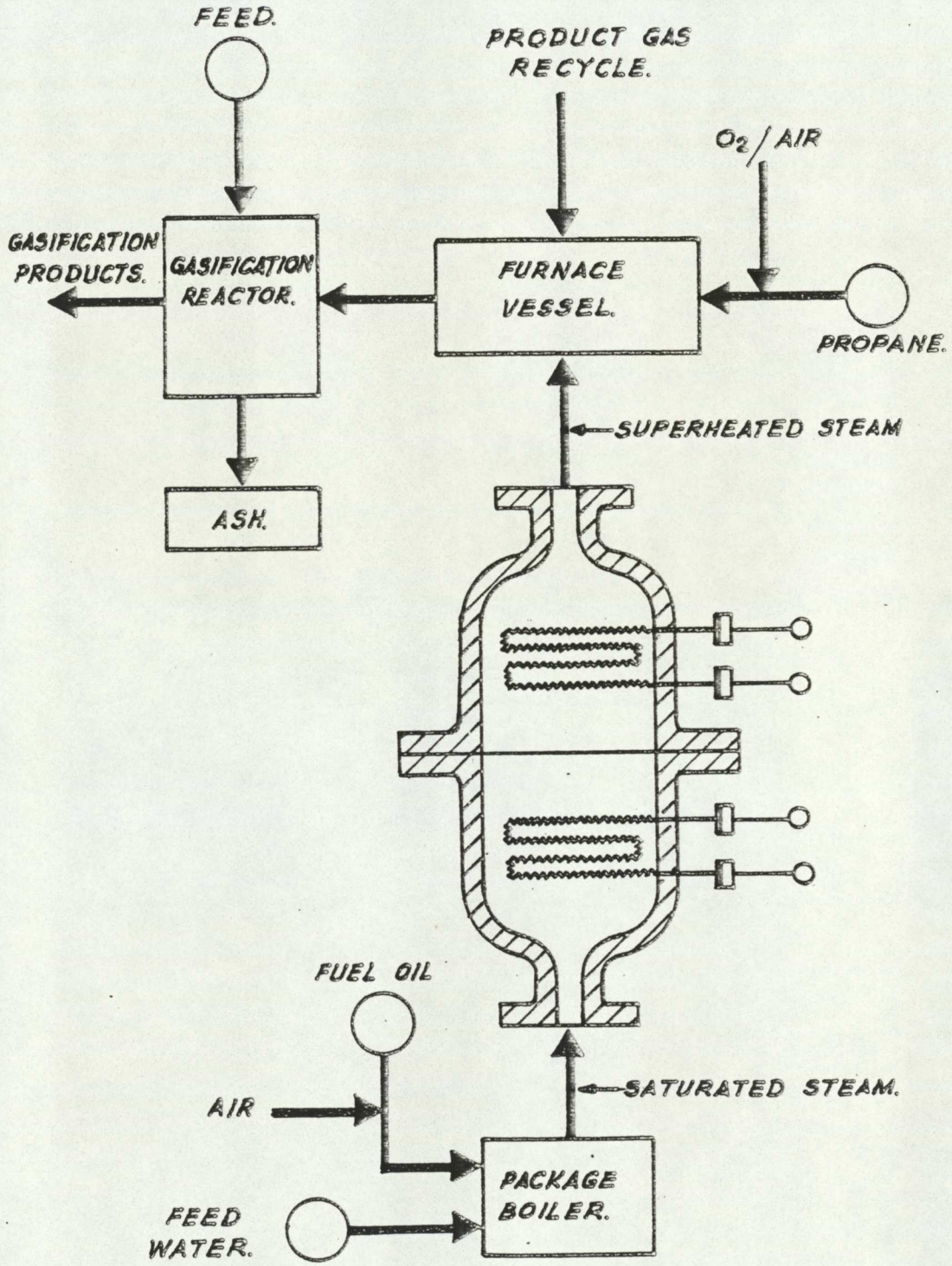

FIG. 10.2 - ENCLOSED ELECTRIC ELEMENT.

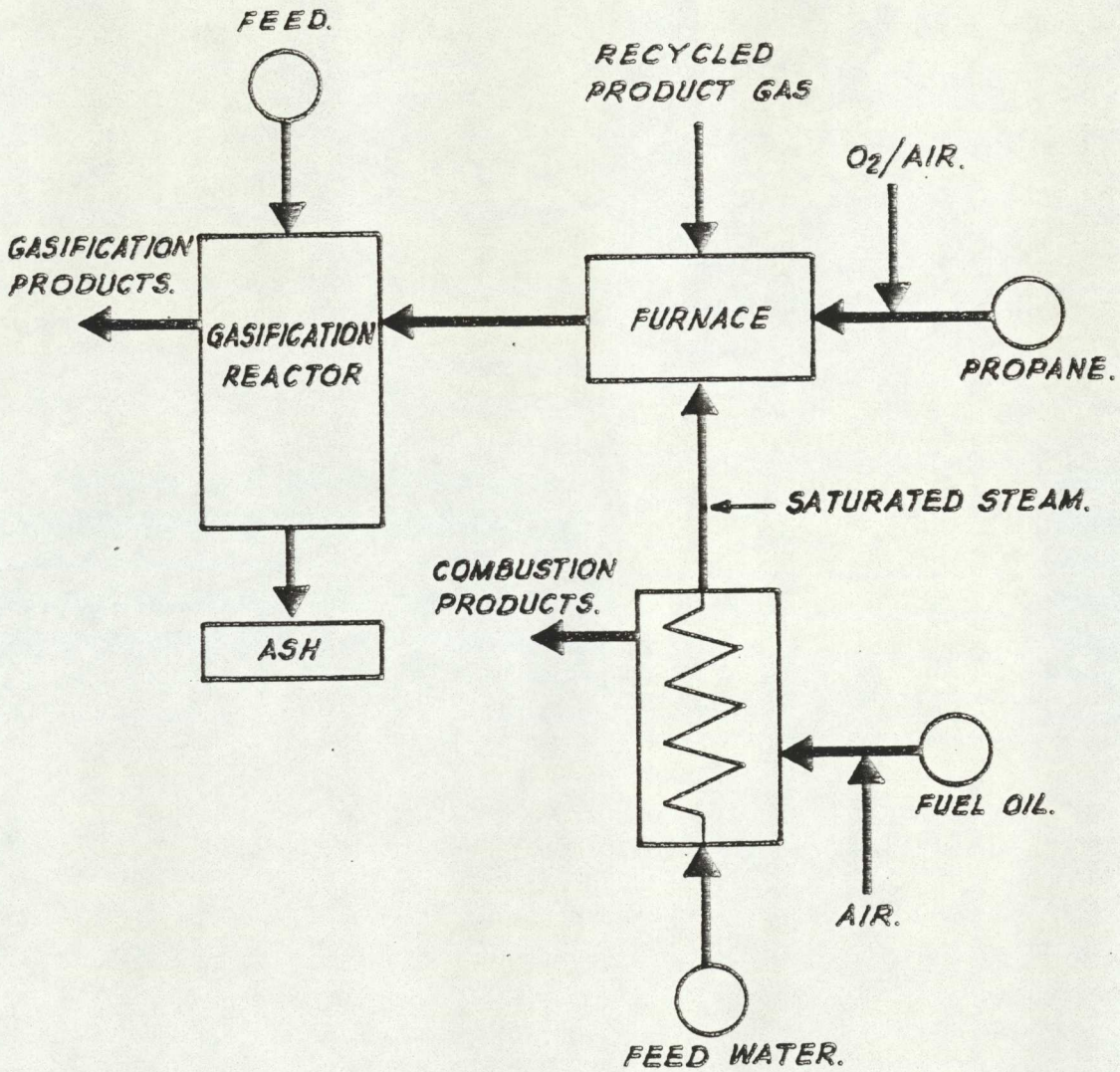

FIG. 10.3 - DIRECT STEAM INJECTION

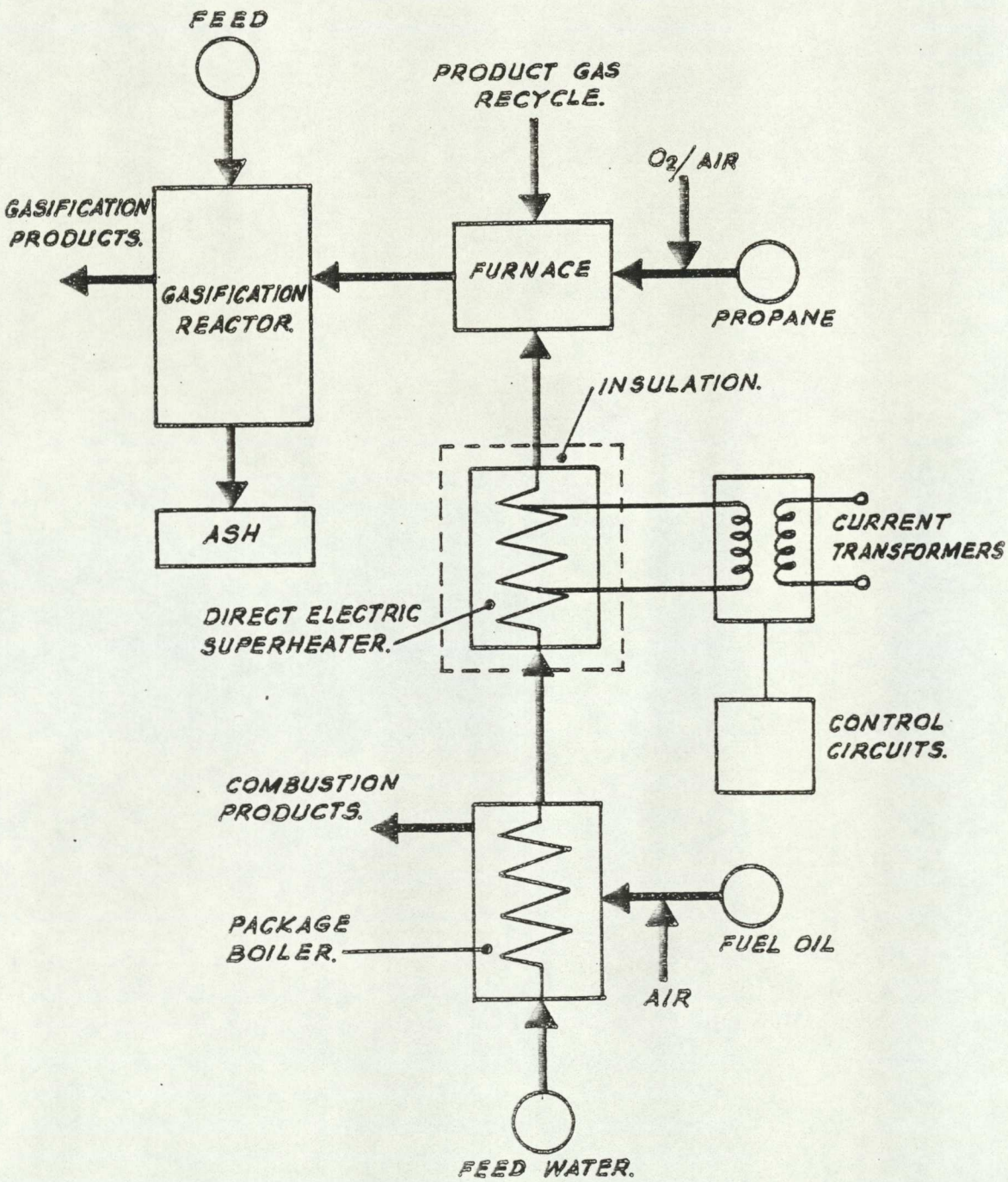

FIG. 10.4 DIRECT ELECTRIC SUPERHEATER

Figure 10.5 Detail: Thermal Sleeve

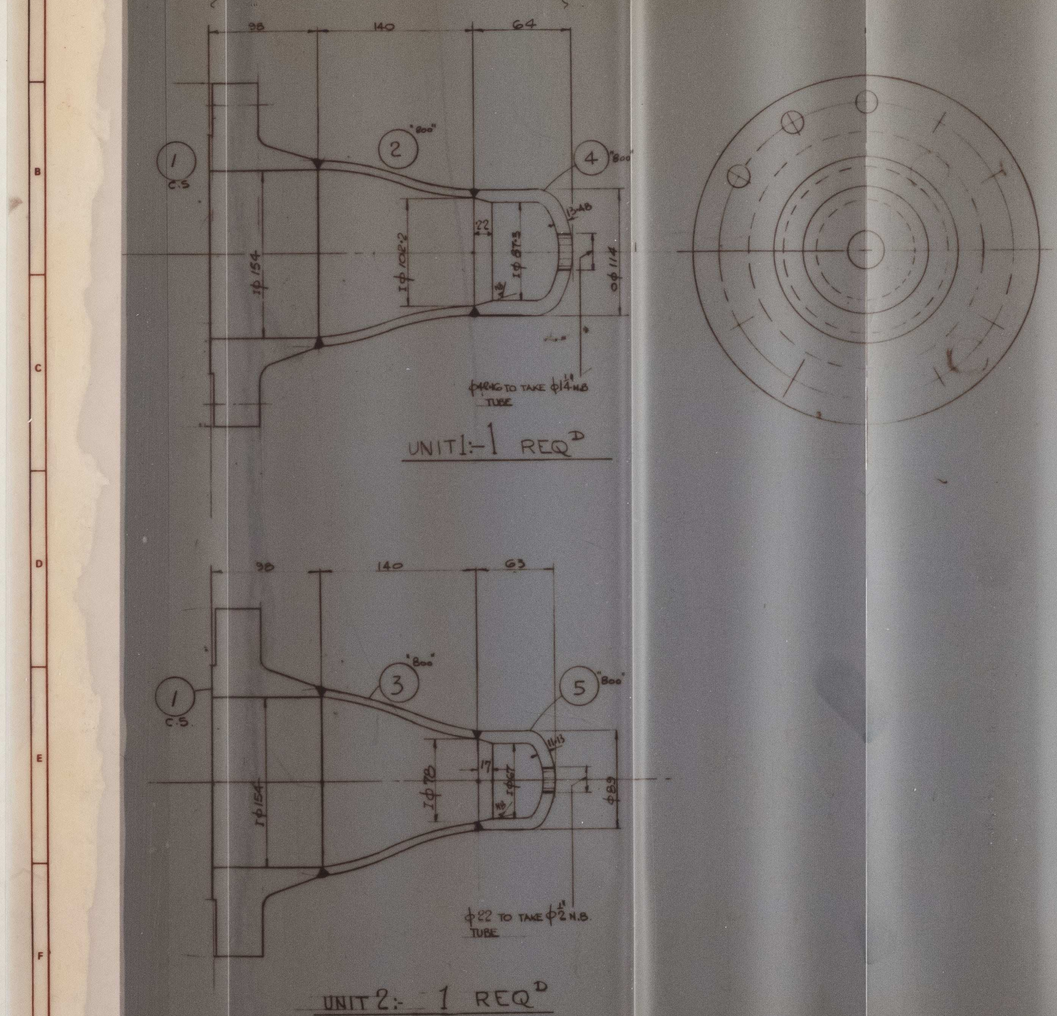

MATERIAL LIST

PART No.	QTY.	DESCRIPTION	MATERIAL	REMARKS
1	2	CLASS 300 W.N.R.F.F 6" N.B	BSTM A105 GR I	DRILLED
2	1	STD. WT 6"x4" REDUCER	INCOLOY 800	"
3	1	" " 6"x3" "	INCOLOY 800	"
4	1	SCH 160 CAP. 4" N.B	INCOLOY 800	WITH BORE MACHINING.
5	1	" " 3" N.B.	INCOLOY 800	" " "

DESIGN ASME VIII DIV 1
WELDING ASME IX.
INSPECTION AUTHORITY: BRITISH ENGINE INSURANCE CO.

DESIGN PRESSURE:- UNIT 1: 5 BAR ABS
UNIT 2: 30 BAR ABS

REV.	DATE	BY	ALTERATION	CH'D.
A	21.12.93	JM	MODIFIED & NOTES ADDED	DSF

BIOMASS

DETAIL: THERMAL SLEEVE

FOSTER WHEELER POWER PRODUCTS LTD.
RESEARCH AND DEVELOPMENT DEPARTMENT
THIS DRAWING IS THE PROPERTY OF FOSTER WHEELER POWER PRODUCTS LTD. THE RECIPIENT THEREOF MUST NOT REPRODUCE OR COPY THE SAME NOR PART WITH POSSESSION THEREOF NOR USE THE SAME SAVE AS MAY BE NECESSARY FOR THE PURPOSE FOR WHICH IT WAS SPECIFICALLY FURNISHED BY "FOSTER WHEELER POWER PRODUCTS LTD."

SCALE :- 1:2
DRAWN BY
CHECKED BY
APPROVED BY
REVISION A

CONTRACT No. B 86 04801
DRAWING No. RDG95- H105

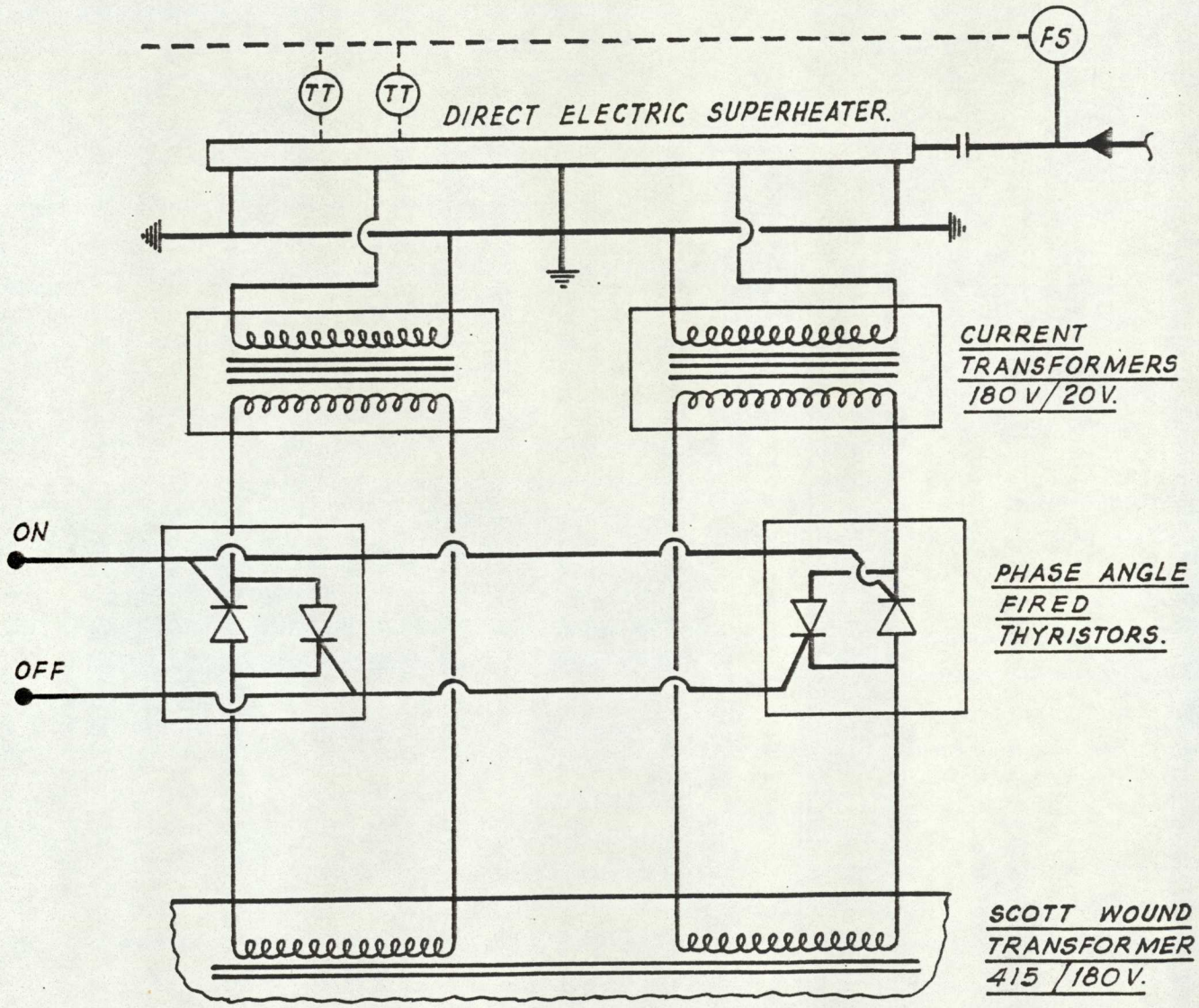

FIG. 10.6- DIRECT ELECTRIC SUPERHEATER SCHEMATIC.

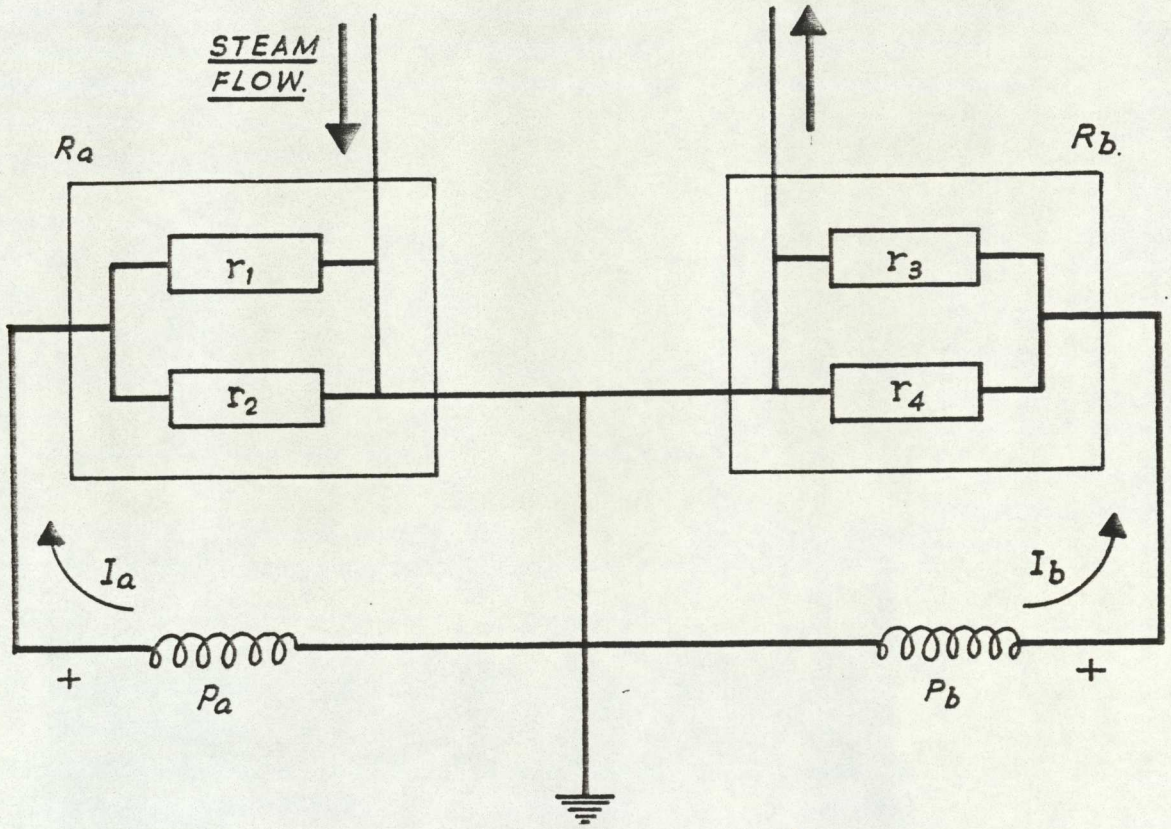

FIG. 10.7- SUPERHEATER RESISTANCE CIRCUIT.

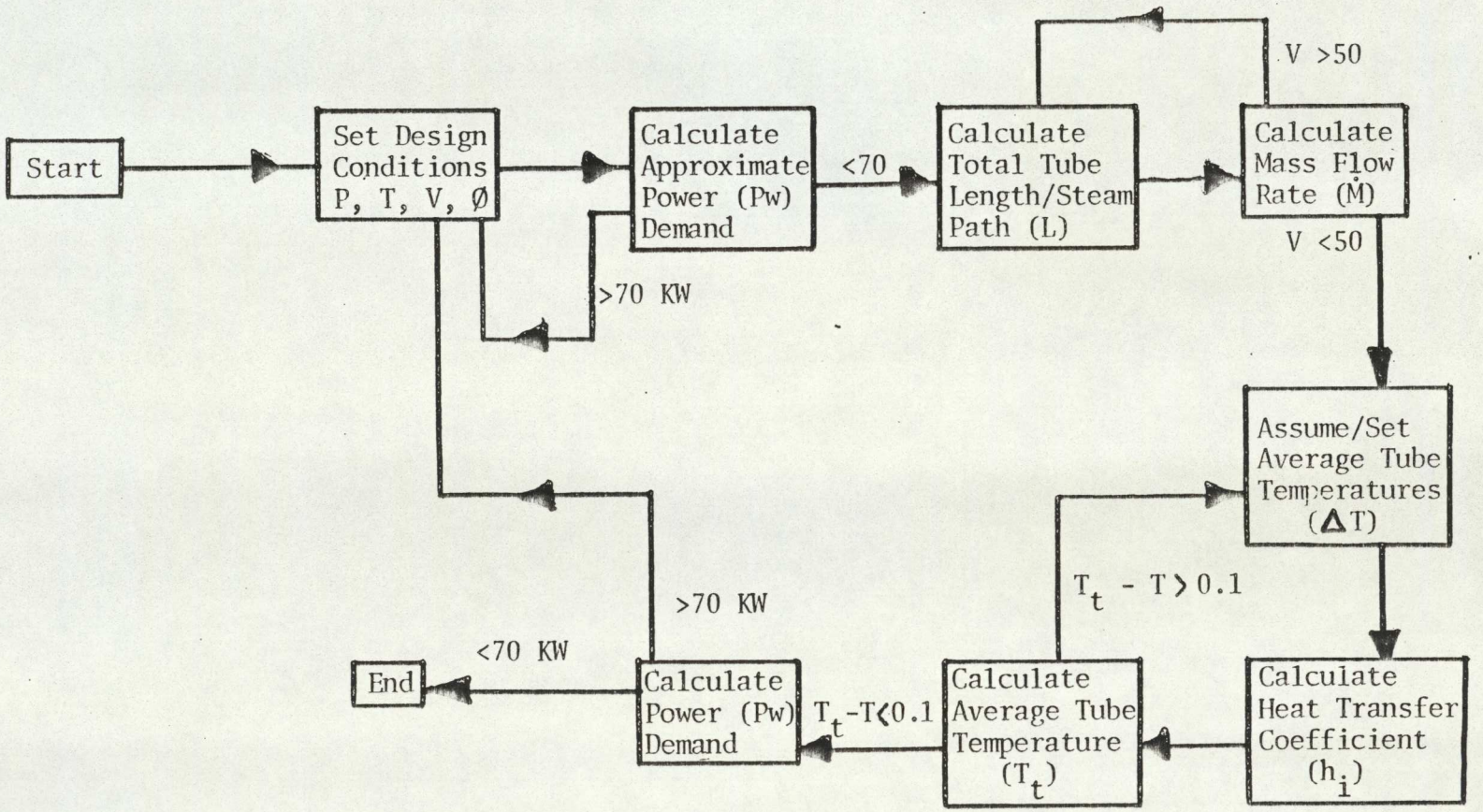

FIGURE 10.8 - CALCULATION PROCEDURE : SUPERHEATER TUBES

Figure 10.9 Detail: Tee Blocks for Superheaters

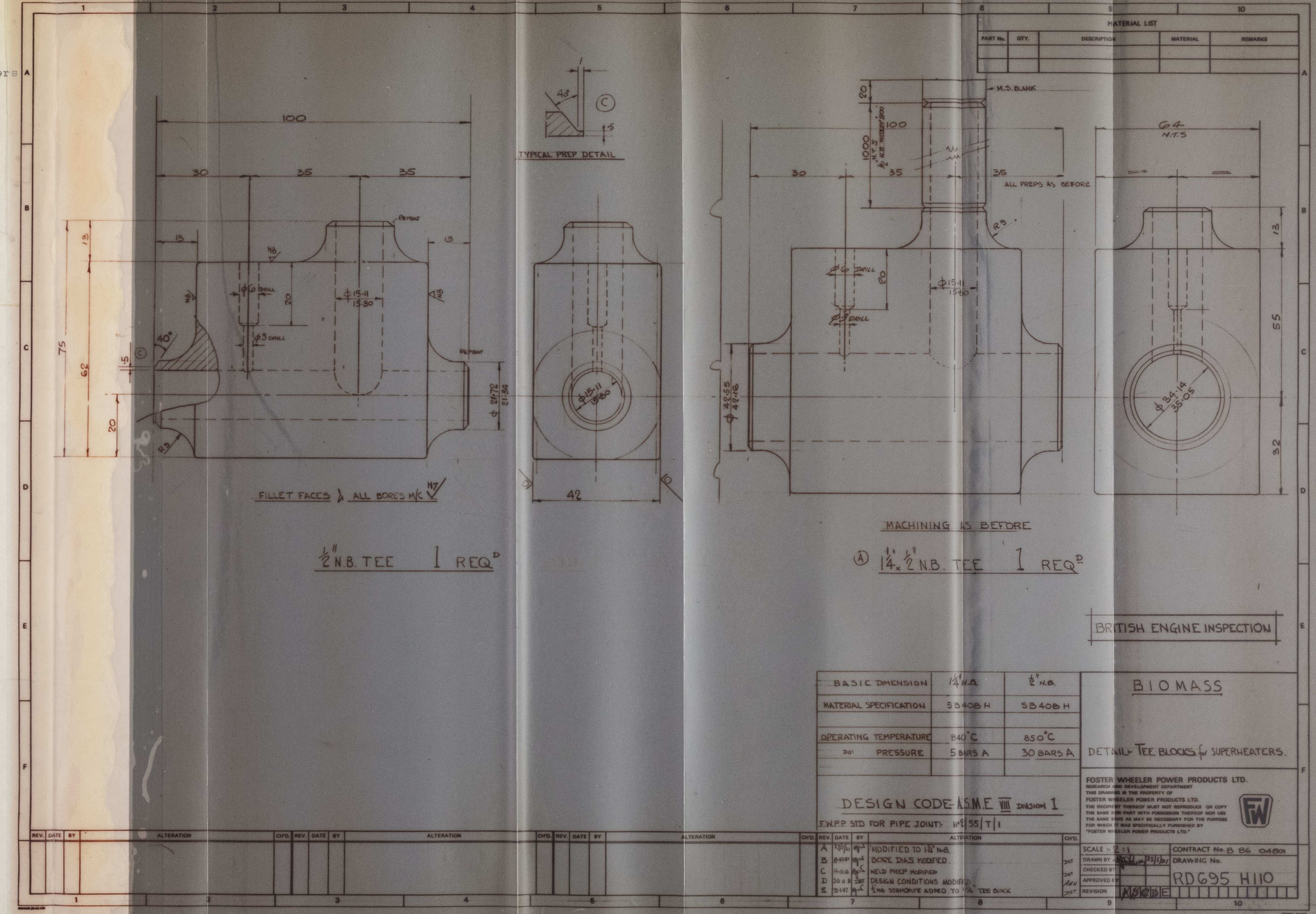

Figure 10.10 Detail: Busbar Clamps

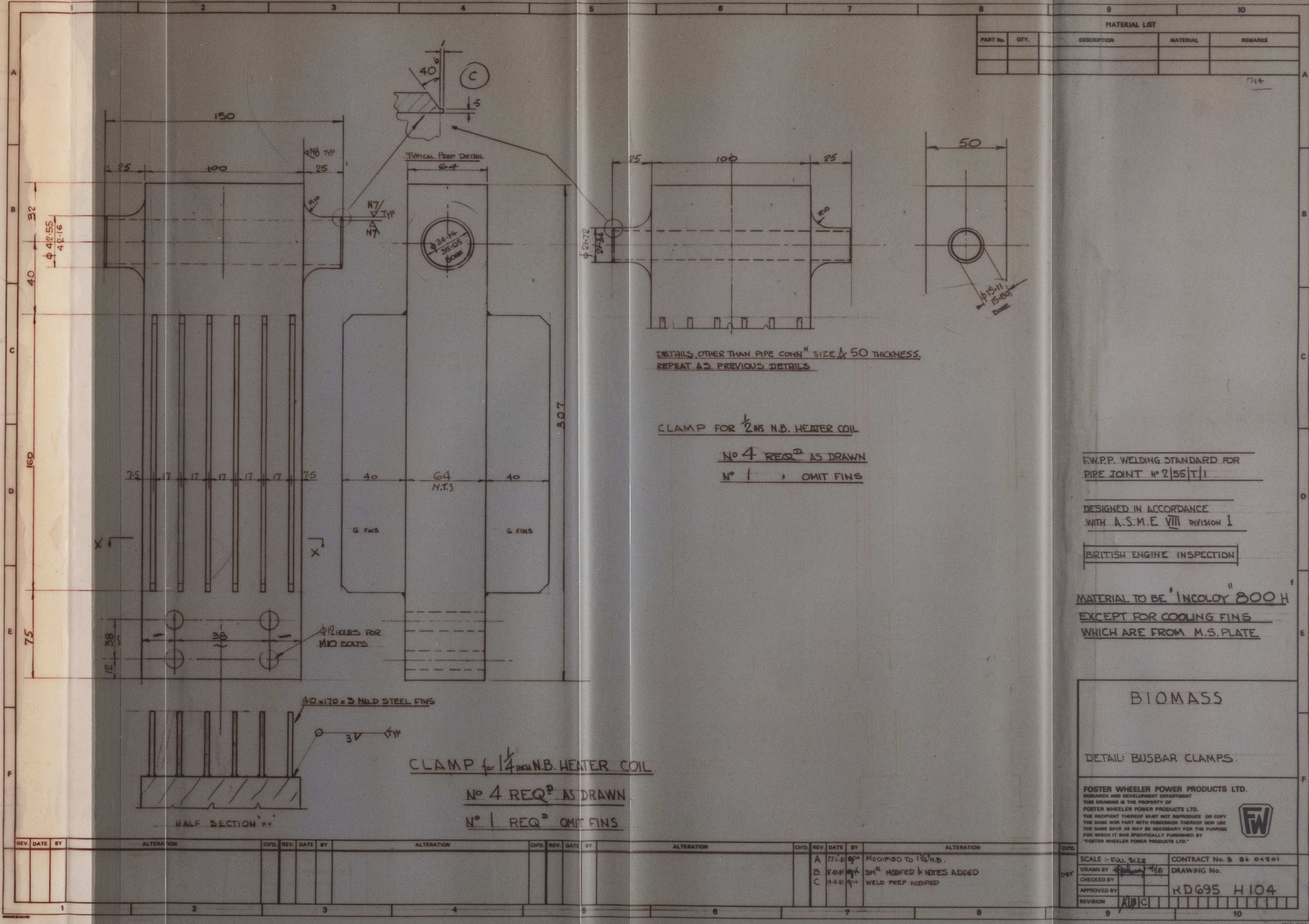

Figure 10.11 11/4" NB Superheater Coil

Details and G.A.

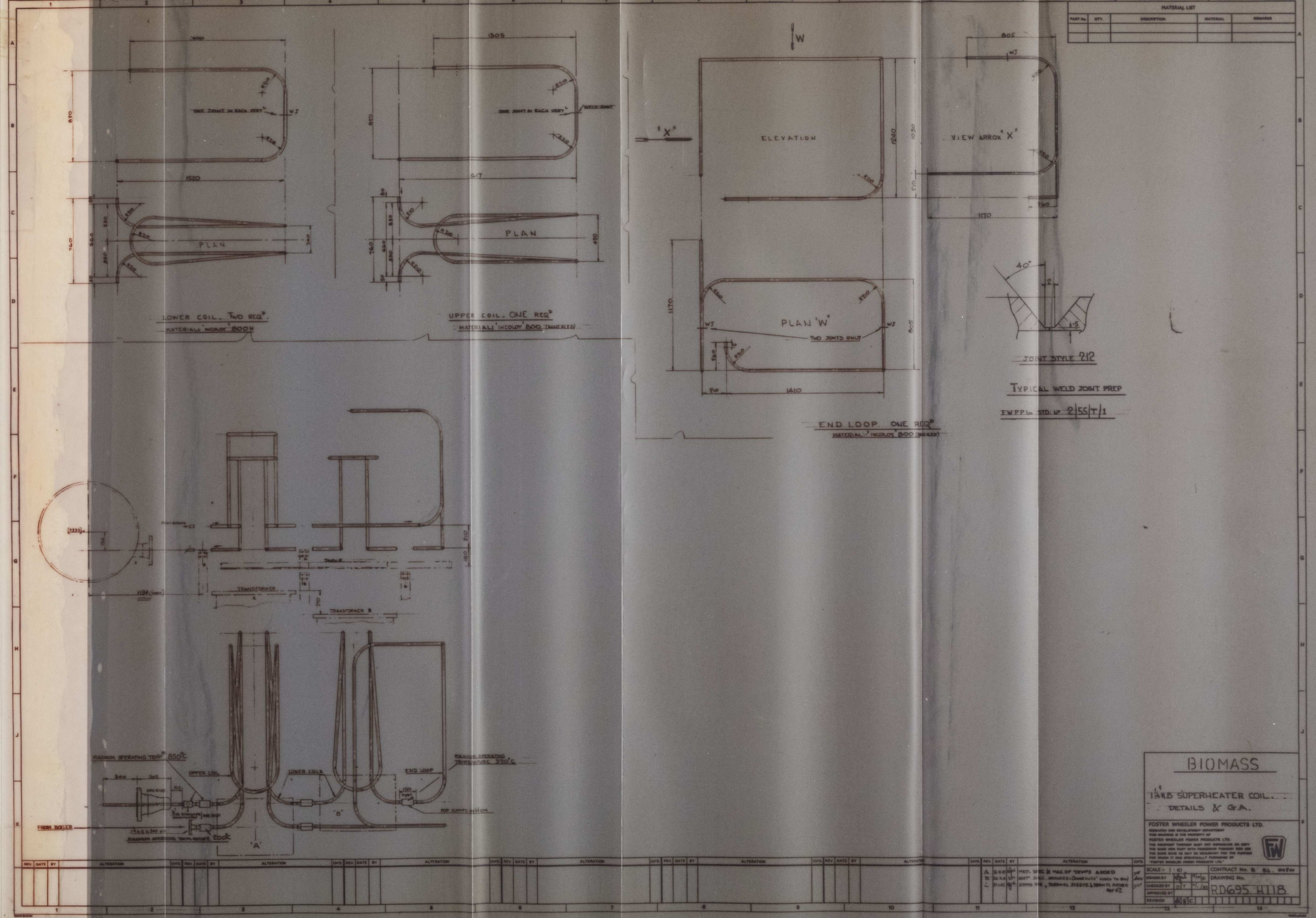

Figure 10.12 Detail: Extension to Staging

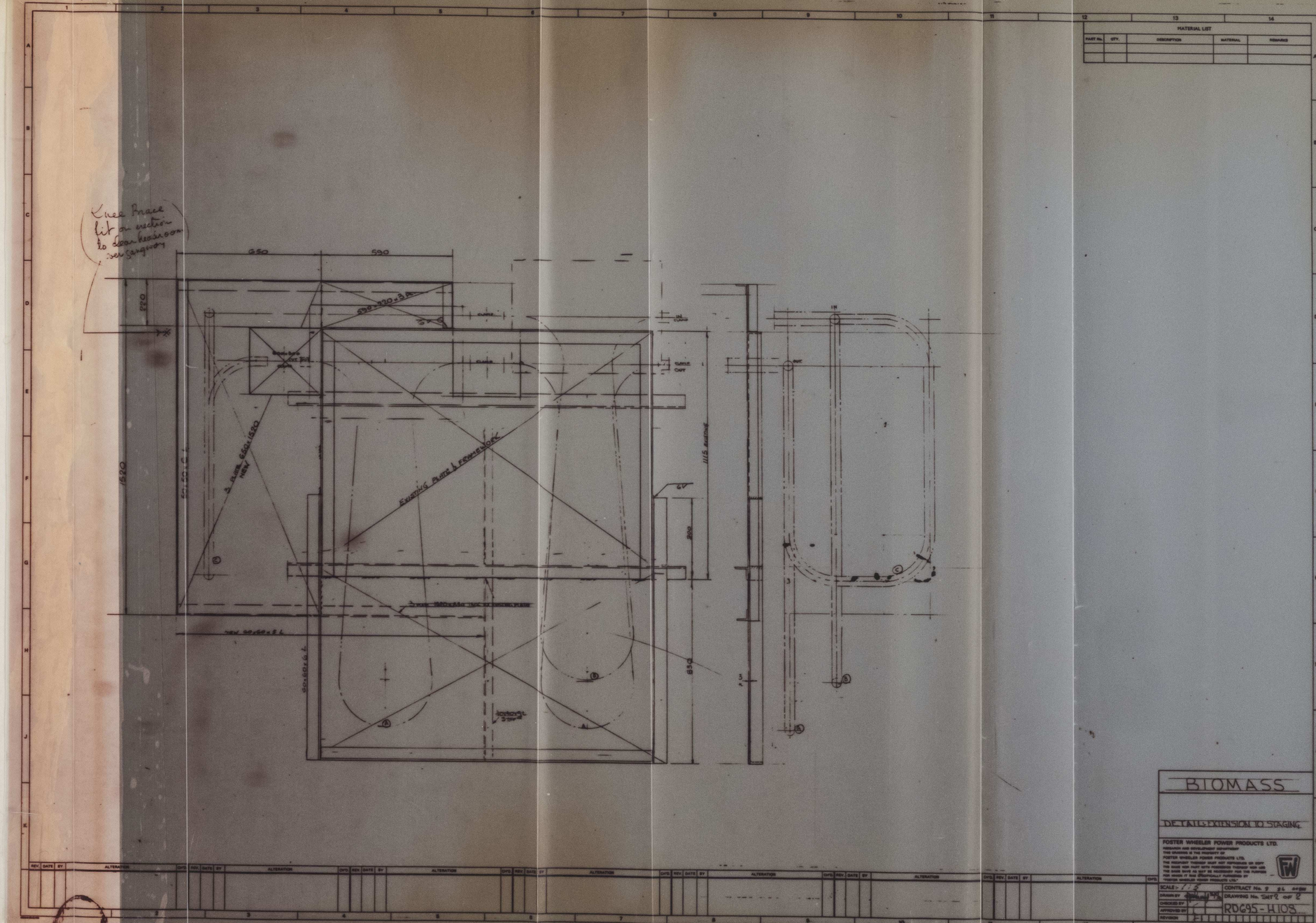

Figure 10.13 Transformer Staging

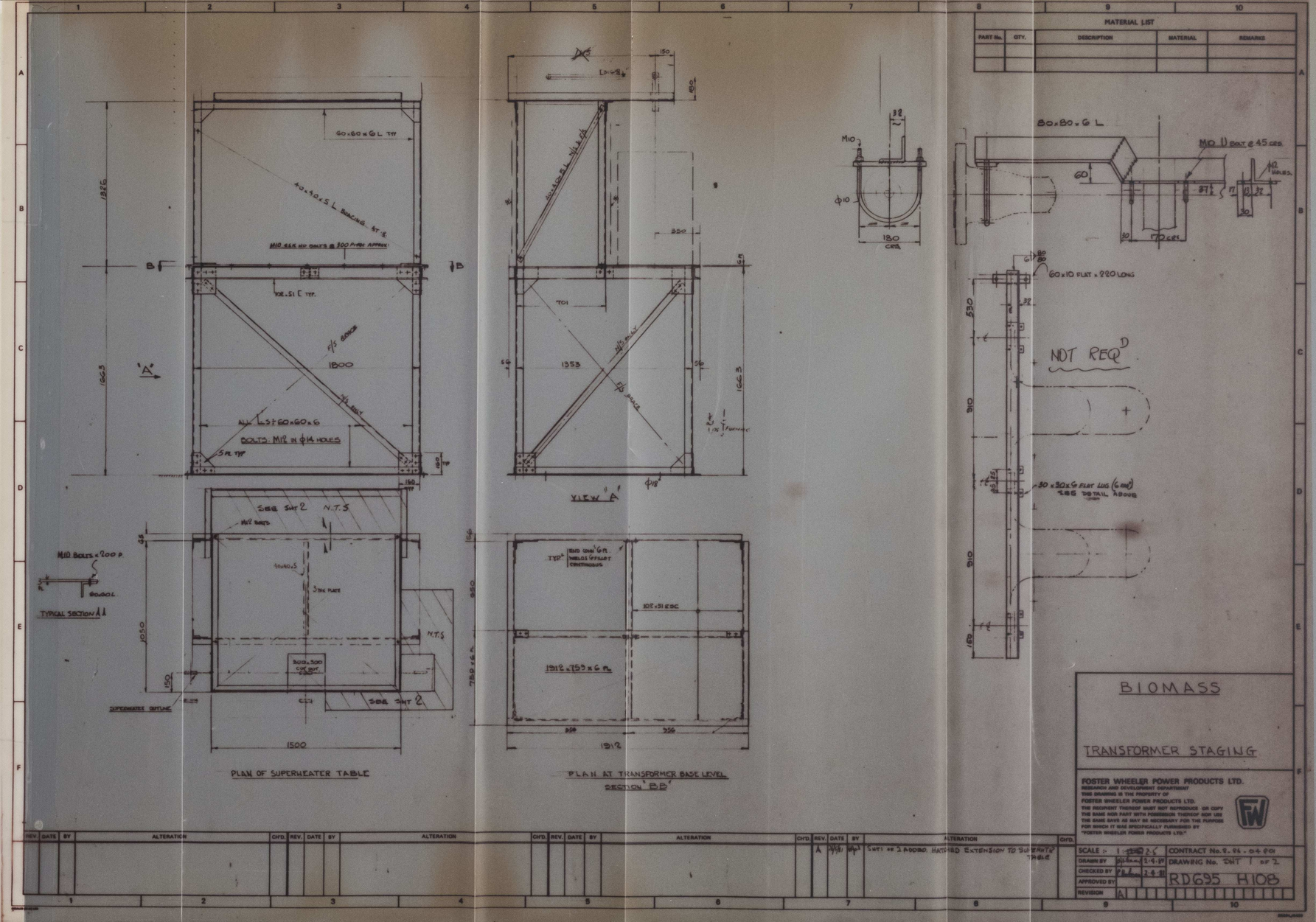

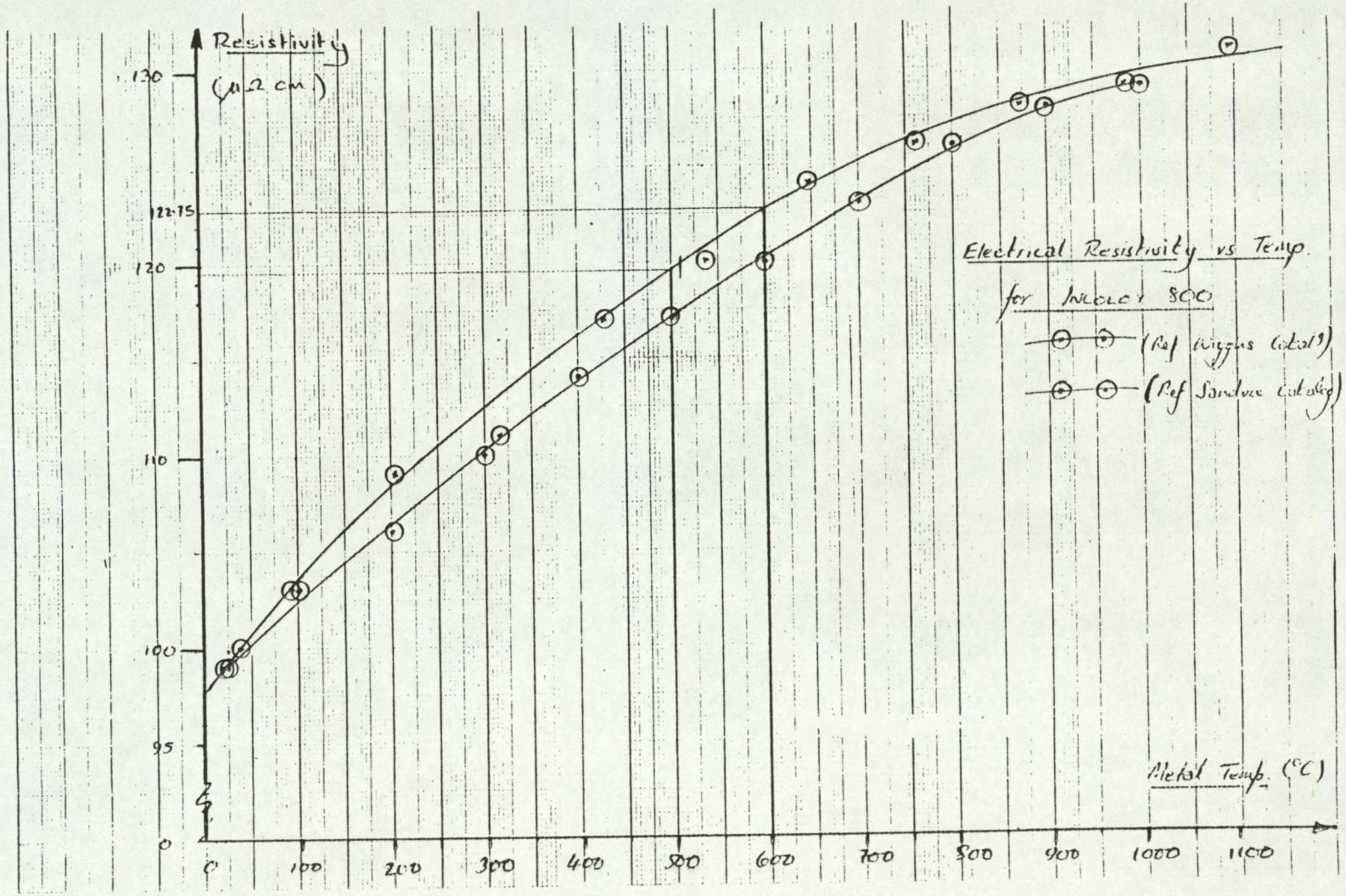

FIGURE 10.14 - RESISTIVITY VS. METAL TEMPERATURE FOR INCOLOY 800



Figure 10.15. View of superheater tubing.

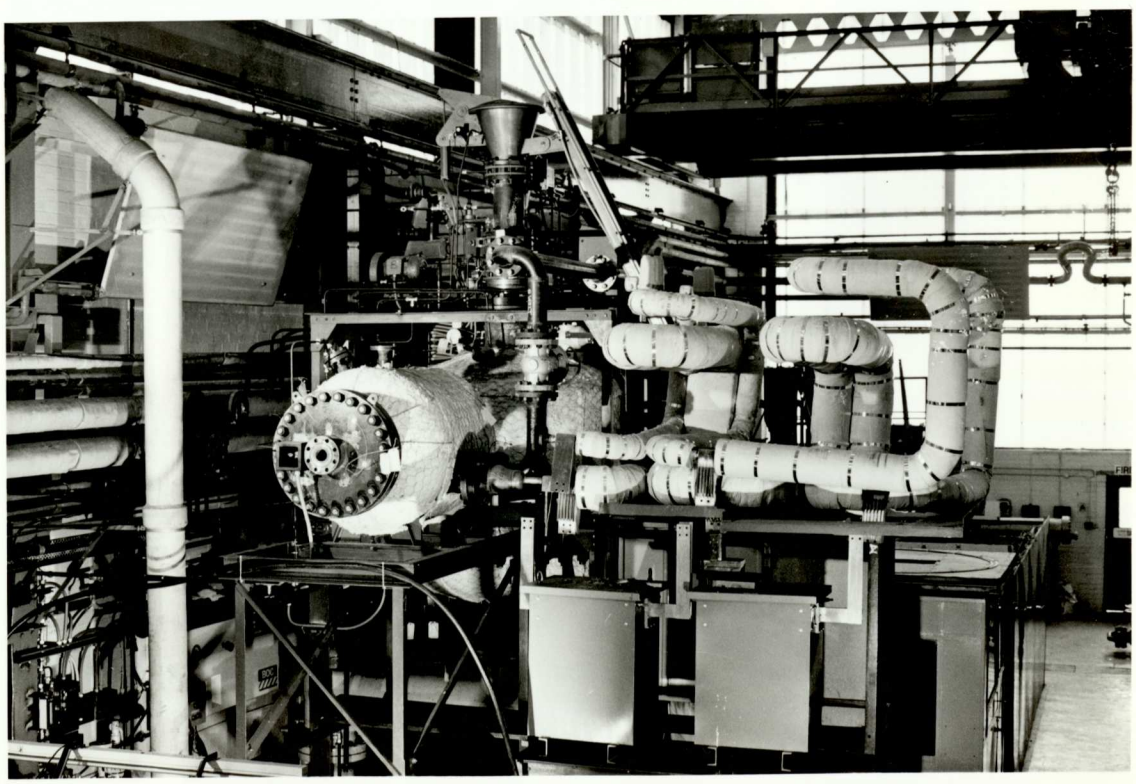

Figure 10.16. View of test plant showing completed superheater bank, feeder system and furnace.

11.0 UTILITIES AND MISCELLANEOUS PLANT

11.1 Utilities

The plant services which were listed in section 3.9 are outlined below. Some of the required services such as water and electricity would be generally available on any industrial site. Others, such as the provision of high pressure steam and oxygen, are unique to the pressurised test facility and reflect the additional needs of such a plant.

11.1.1 Services

a) High pressure saturated steam: 150 kg/h at 3×10^6 N/M^2 g

As noted in Chapter 10.0 the high pressure steam was supplied by a Wanson oil fired helical coil boiler. This unit was a proprietary item modified by the manufacturer to withstand the maximum 30 bar pressure.

b) Low pressure works saturated steam: 1×10^6 N/M^2 g

c) Propane gas: via industrial crate (with bottle band heaters to prevent freezing). Maximum pressure 0.5×10^6 N/M^2

d) Oxygen: via industrial crate or ring main. Maximum pressure 3×10^6 N/M^2 g. Supplied by distribution console with keylock discharge valve delivery

e) Inert gas: ring mains argon and nitrogen also bottled nitrogen as back-up

f) Electrical power:
240 V, 50 Hz
1 x 415V/3 phase supply. Maximum load 100 A/phase
4 x 415V/3 phase supply. Maximum load 30 A/phase

g) Water: mains and cooled recirculated (via works cooling tower)

h) Compressed air: ring main via filter/lubrication unit. Maximum pressure 0.5×10^6 N/M^2

i) Drainage: Foul sewer discharge

j) Crane: SWL 20 tons

11.2 Miscellaneous Plant

The following sections identify and describe important plant items not covered in previous chapters.

11.2.1 Product Gas Flare

The test plant role was outlined in chapter 1.0 and its main unit functions were described in detail in the following chapters. In view of this, it will not be discussed further, other than to re-state that a principal design embodiment was that the plant should produce synthesis gas under a wide range of operation conditions.

The plant product gas is both toxic and flammable and cannot therefore be disposed of to atmosphere directly without hazard. It was decided that the only realistic option regarding disposal was to flare it. Other routes, such as chemical conversion or storage were considered impractical.

The nominal maximum rate of product gas production was estimated to be approximately 0.08 m^3/s (line G9 Table 3.2:40kg/h feed). Assuming chemical equilibrium, it may be seen from Figure 2.1, that the product gas could contain up to 35% H_2 and 8% CO (volume basis-wet). To dispose of product gas an in-house flare design, based on

a unit developed for a coal gasification plant application was adopted for use.

The original design was enhanced by shrouding the projected flame volume with a stainless steel sleeve as shown in Figure 11.2 and 11.3. The detailed design is shown in Figure 11.1. Positive ignition of product gas was ensured by mounting a propane pilot burner on the unit. A Landis and Gyre continuous spark ignition electrode unit was located at the base of the flare to serve two purposes:

a) act as an ignitor for the air/propane pilot, and

b) back-up ignition for the product gas.

An optical (infra-red) flame failure detector was also mounted to indicate ignition status. The ignitor start-up is initiated from the plant control room where system status is indicated on the control panel.

11.2.1.1 Flare Operation

Although this flare was not fired on product gas from the test plant, it was used to dispose of product gas from an adjacent fluidized bed gasifier in separate trials. Two problems became evident:

a) Ignitor corrosion: the ignitor was found to have corroded due to rainwater entering the inoperative flare and collecting in the ignitor housing. The ignitor had to be replaced and a small drainage hole was made to prevent reoccurrence

b) Siting: as can be seen from figure 11.3, the flare was mounted off the main building structure and in the lea of the roof line. During operation of the fluidized bed, when product gas with an approximate calorific value of 4-5 Mj/Nm^3 was being produced and fired, the flame volume was

greater than the sleeving, resulting in a flame appearing out of the top of the flare unit. When the wind was blowing towards the building, there was concern that the resin based cladding could be ignited. The flare will therefore have to be relocated.

11.2.2 Piping

Rig piping was sized in accordance with the gas flow information presented in Table 3.2. To save on pipe and pipe support weight the diameters were calculated on an assumed pressure of approximately 2 bar g to give a gas velocity of 15 m/s. At atmospheric pressure, the gas velocities would be approximately double, as shown in Table 3.2. However, as the trials were projected for pressurised operation up to 30 bar g, gas velocities would be lower than 15 m/s for most cases.

The pipe designs were based on standard welded fittings, reducers, flanges and so on. They were assembled in accordance with ASME VIII DIV 1 requirements. Pipe lengths were calculated on a preliminary basis from isometric plant layout drawings showing the unit locations. The isometrics were also used to identify valve and flange requirements. Once the main rig units were located on the support structure, (reactor, scrubber, furnace, etc.), the preliminary lengths were re-checked by direct measurement. All the items were purchased with test certificates to verify chemical composition and mechanical strength.

To illustrate the depth and complexity of the design requirements, an example of the scrubber outlet sampling tee is used.

11.2.2.1 Scrubber Outlet Sampling Tee

Provision was made for gas sampling and pressure measurement both on the partial oxidation reactor and the

gas cleaning plant discharge line. The sampling tee design, based on standard piping fittings, is shown in Figure 11.4. It can be seen that the tee is made up of fourteen separate piping elements and three gaskets. The following procedural steps were followed, noting that the ASME VIII code was applicable for this item:

a) Outline design of fitting/detailed design
b) Purchase of certificated components
c) Preliminary (tack weld) assembly
d) Certification checks, including welder qualifications, welding procedure, material specification (including welding electrode composition)
e) Welding, followed by non-destructive examination
f) Hydraulic testing

Insulation requirements for the nozzle were determined as shown in Appendix 11.1. The insulation materials referred to are detailed in Appendix 5.3.

Application of the above procedure to the many hundreds of components constituting the test plant explains, in part, the higher cost of pressurised plant, particularly at test plant scale where design steps are similar to those required for full scale plant. These procedures accounted for a substantial proportion of the labour element of the total cost of the test plant (See also Chapter 5.0).

11.2.3 Recycle Gas Fan

The recycle gas fan was required to pass "cold" clean gas from the gas cleaning plant (scrubber) either to the POX or furnace or both. Its location is shown in Figure 3.4 The maximum fan discharge duty was calculated to be 0.23 m^3/s as given in Table 3.2. The inlet pressure requirements vary between 1 bar a minimum and 30 bar a maximum. The fan specification is given in Table 11.1 below:

TABLE 11.1

Recycle Gas Fan Specification

Parameter		Comment
Gas temperature (max)	234 C	At 29 bar
Pressure head (max)	16 in H_2O	Estimated dP's
System pressure	2-29 bar g	
Gas volume flow (max)	0.23 m^3/s	At nominal max temperature 200 C
Gas mass flow (max)	200 kg/h	
Fan bypass flow (max)	0.23 m^3/s	As above
Gas molecular weight	14-28	Depends on reactor medium and conditions
Drive		Hydraulic power pack

11.2.3.1 Fan (Blower) Sizing

In sizing the blower it was shown that system vapour pressure varied from 0.2 MN/m^2 (120 C, 2 bar) to 3.0 MN/m^2 (234 C, 30 bar). The worst case for a blower will be that which maintains at 2 bar. The blower selected was a positive displacement type, so mass flow is proportional to the absolute pressure P. To establish mass flow required, the following assumptions were made:

a) Recycle gas flow temperature was at water boiling temperature for ambient pressure

b) Required temperature of recycled gas plus POX gas was 500 C maximum

c) Specific heat was constant with temperature and the same for both the recycle gas stream and the POX stream

d) Mean molecular weight of the gas streams was 14

If m = mass flow rate of cold gas; by conservation of enthalpy:

$(200 + m)\ 500 = 200 \times 2000 + m\ T_B$

$m(500 - T_B) = 200(2000 - 500)$

$m = 300{,}000/(500 - T_B)$

Volumetric flow rate of gas (V):

$V = (mRT)/(MP)$

Where: m = mass flow rate

M = molecular weight

R = 8.3143 kJ/kg mol (gas constant)

T_B= temperature in K= (T_B+273.15)

P = absolute pressure MN/m^2

Thus $V = \{m \times 8.3143\ (T_B + 273.15)\}/14 \times P \times 10^3$

From which:

TABLE 11.2

Fan Pressure versus Volume Flow

Pressure bar	Volume Flow m^3/h
2	923
5	435
30	113

Although a careful procurement search was made no suitable blower could be found which would satisfy the fan specification as set out in Table 11.1 and Table 11.2. In particular delivery of non-standard fans was extended and the potentially high operating pressure (up to 29 bar g) could not be met. A decision was taken to avoid the problems by buying a standard "off the shelf" Roots blower and locating it within a small customised pressure vessel. The design and manufacture of this unit was sub-contracted. Figure 11.5 shows the details of the pressure vessel design, where it can be seen that the blower sits inside the vessel with its drive shaft being

taken through an 18" diameter cl. 300 lb blind flange via a flexible coupling, bearing and "Supagraf" seal. The vessel has a blind flange at either end to facilitate installation and maintenance of the seal and blower.

The hot saturated gas enters the blower housing where it is drawn through the Roots blower. It was considered that the blower could act as an impingement separator to any entrained liquor droplets from the scrubber; to avoid these collecting in the blower vessel, a flexible rubber pipe was connected from the outlet of the blower to the outlet of the pressure vessel. Downstream of the blower a small knockout pot was installed to allow separation and blowdown of condensate. Provision was made for pressure vessel blowdown if required.

A Slack and Parr hydraulic power pack was linked to the drive shaft of the blower through a drive unit and flexible coupling. The drive unit was mounted on the motor plate shown in Figure 11.5. Flow control is undertaken by adjustment of the hydraulic control bypass valve and/or the blower bypass/recycle valve (line G11 in Figure 3.4).

11.2.4 Gas Flow-Rate Measurement

Gas flow rate measurements were undertaken using orifice plates. These being the simplest, most convenient to install in the system lines where they were mounted in lines G9, G10 and G13 (See Figure 3.4). A further orifice plate was located in the water make-up line to the Wanson boiler, to permit assessment of the superheated steam production rate. Because of the very large variations in flow with pressure, a range of orifice plates were designed as shown in Table 11.3 below. It was found that neither the D nor the $^1/_2$ D tappings would fit with weld neck flanges; $^1/_2$ D tappings would not fit with slip on type flanges either. Hence, standard D plus $^1/_2$ D tappings were not feasible for this application. Drilled flanges were therefore employed.

An example calculation for an orifice plate designed in accordance with BS 1042 [11.1] is given in Appendix 11.2. Because the flow measurement depends on gas analysis, an assumed analysis was used in the design. The output from the orifice plates was taken to a Delphati transmitter (see chapter 12.0) and then to the plant data logger. True flow rates are calculated retrospectively by consideration of gas temperature (50 - 230 C), pressure (2 - 29 bar g) and gas analysis referred to the same time base as indicative flow.

TABLE 11.3

Orifice Plate Flowmeters

Max Flows	Min (lb/h)	Pressure psi	Orifice Diam inches	Pressure Drop inches H_2O
353	88.2	29	0.648	1 - 4
582	--	290	1.272	"""
133	227	290	1.985	"""

11.2.5 Equipment Support Structure

The equipment support structure is shown in Figure 11.6 and Figure 11.7. The design was undertaken by reference to The Structural Steel Handbook [11.2]. The unit was designed to support the equipment items shown in Table 11.4 below. The structure was built in three separate sections:

a) Scrubber support
b) Reactor/furnace support
c) Superheater support

TABLE 11.4

Weights of Reactors and Ancillary Equipment

Item	Material	Estimated Weight (te)
Main Reactor vessel	Carbon steel	3.6
Furnace vessel	Carbon steel	1.3
Scrubber vessel	Carbon steel	0.7
Extraction screw	Carbon steel	0.9
Blower vessel	Carbon steel	0.7
Scrubber cooler	Carbon steel	0.3
Structural steel	Carbon steel	1.5
Superheaters	Incoloy	0.1
P.O.X.	Carbon steel	1.8
Miscellaneous pipework	Carbon steel	1.0

The reactor/furnace support section was designed to be drawn apart to permit siting of the POX between the downstream of the reactor and the inlet to the gas cleaning plant. The main furnace/reactor structure was located on skids to permit a sliding separation from the linked scrubber support structure with the assistance of the winch, which would be attached to the structure and a suitable anchor point. Details of the structures are shown in Figures 11.7, 10.12 and 10.13.

Figure 11.1 Stoic Gasifier Unit

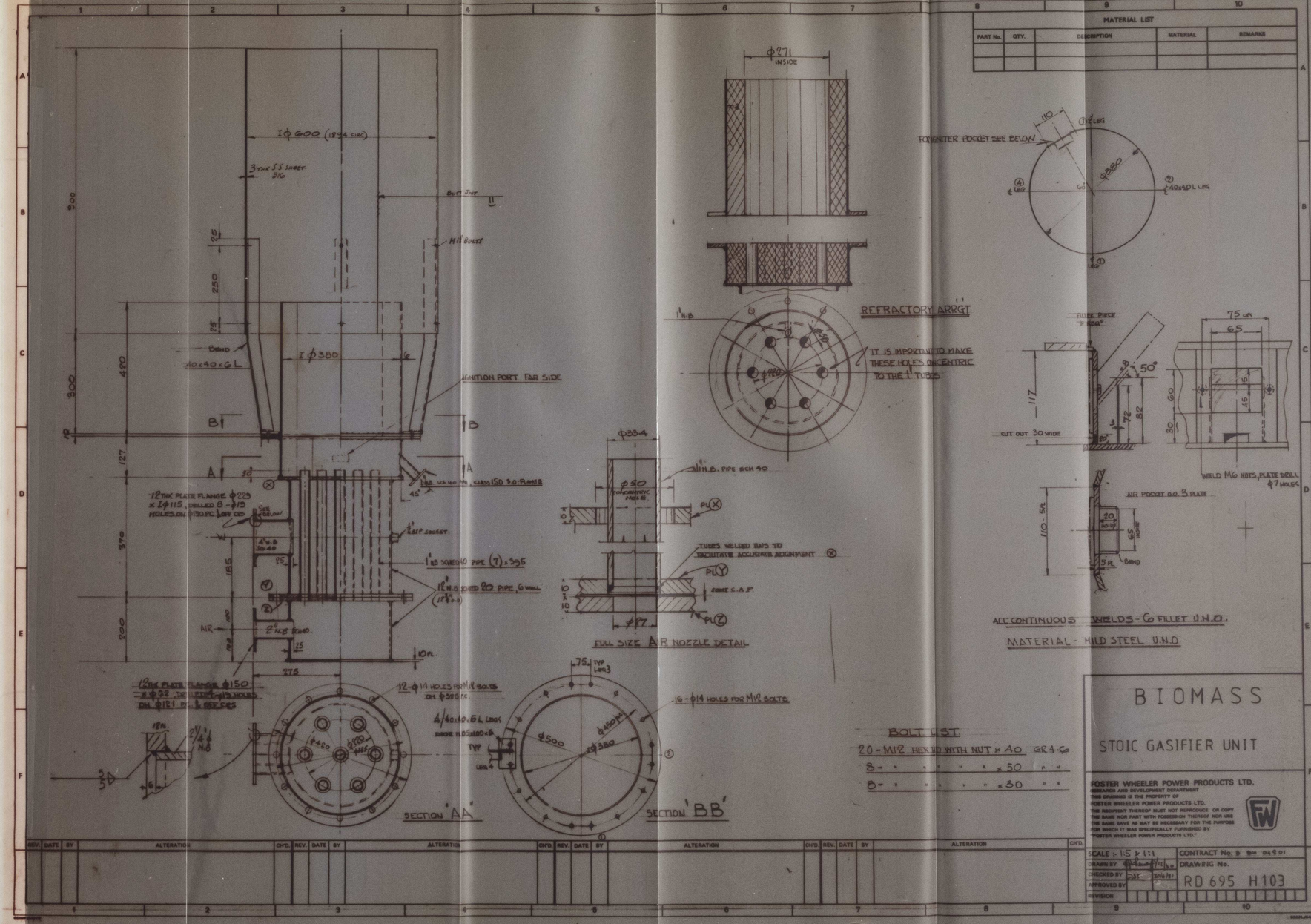

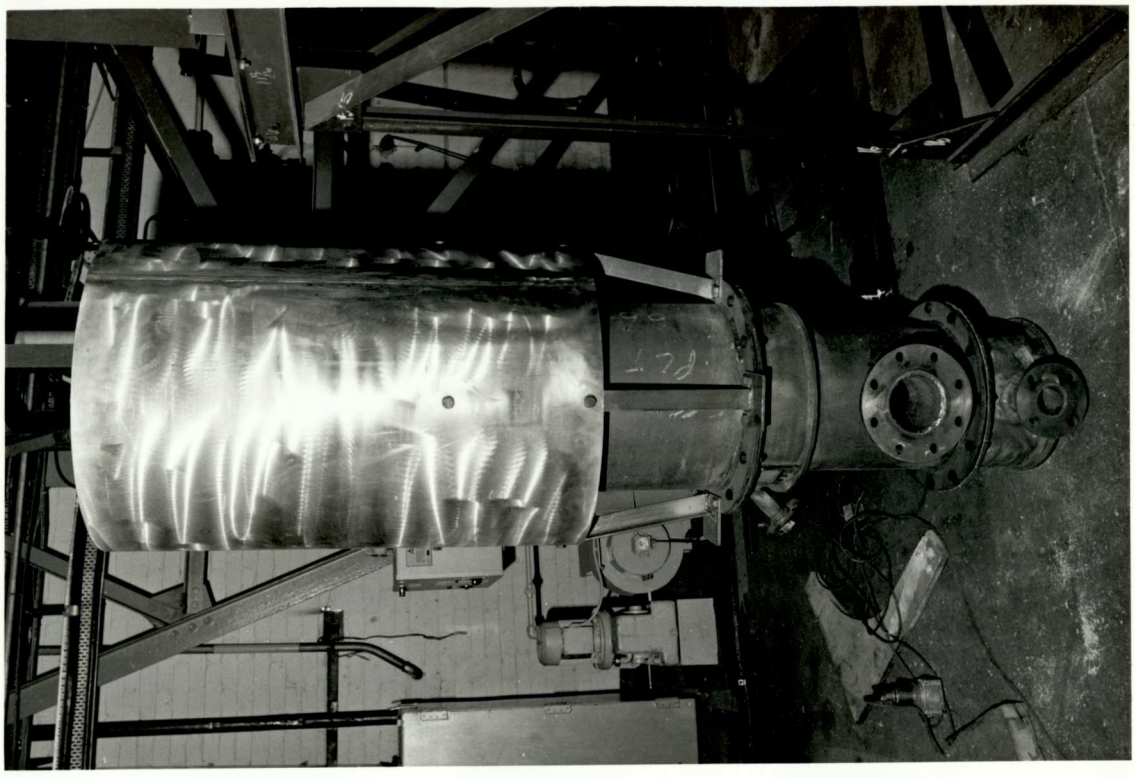

Figure 11.2. Product gas flare awaiting installation.



Figure 11.3. Product gas flare.

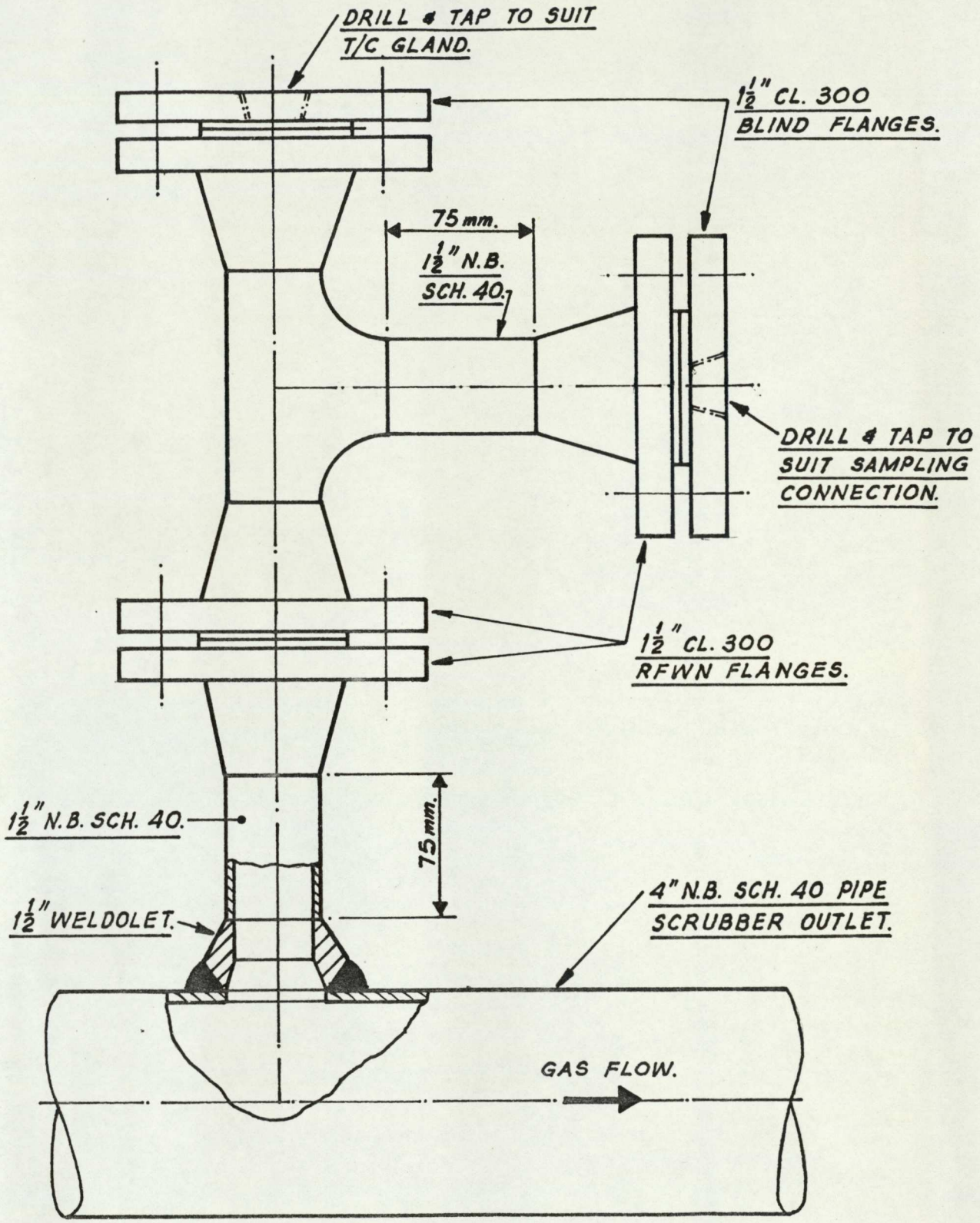

FIG. 11.4 - SCRUBBER OUTLET SAMPLING TEE.

Figure 11.5 BLOWER VESSEL

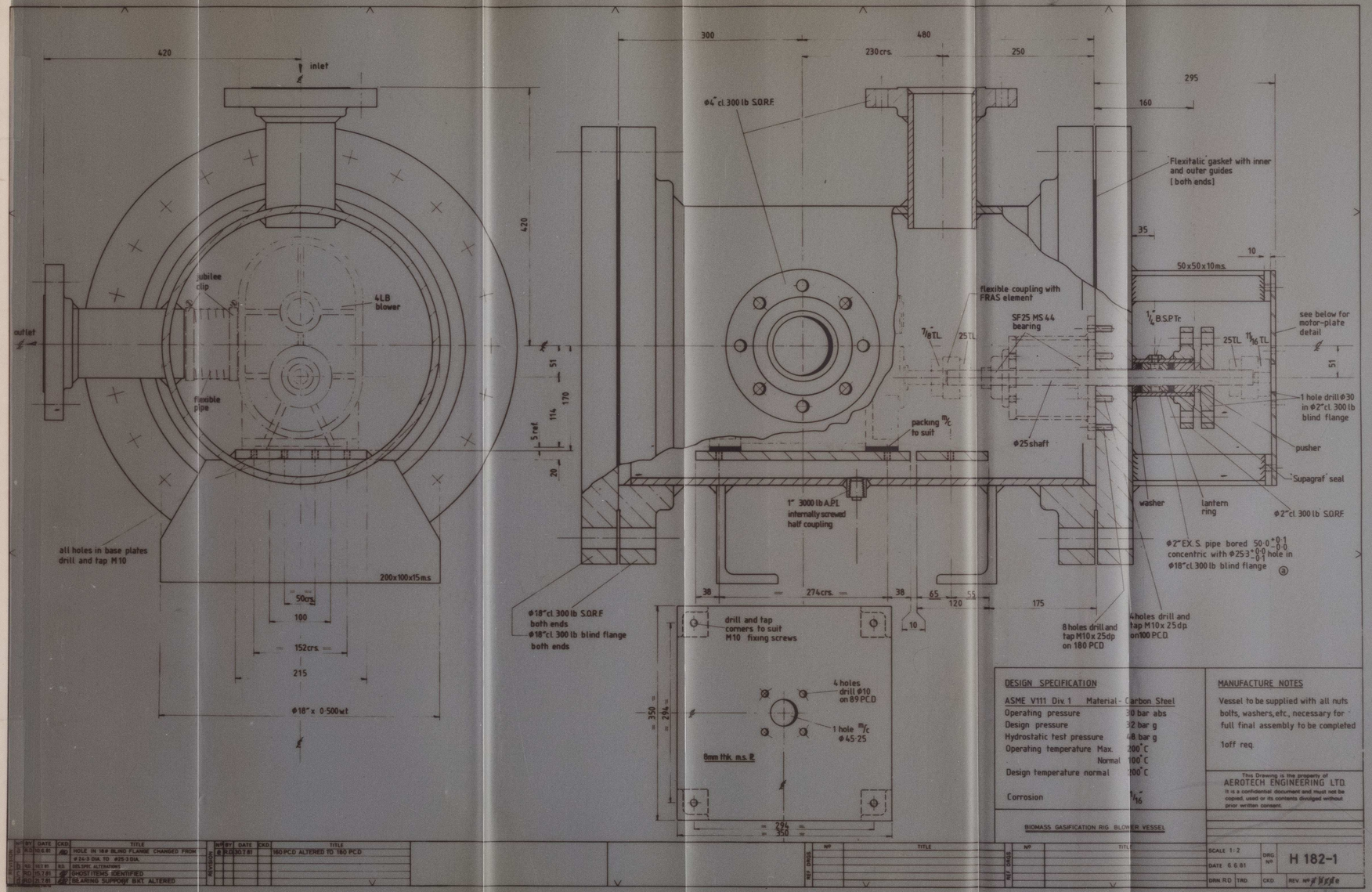



Figure 11.6. Test rig support structure-shop erection.

Figure 11.7 Support Structure

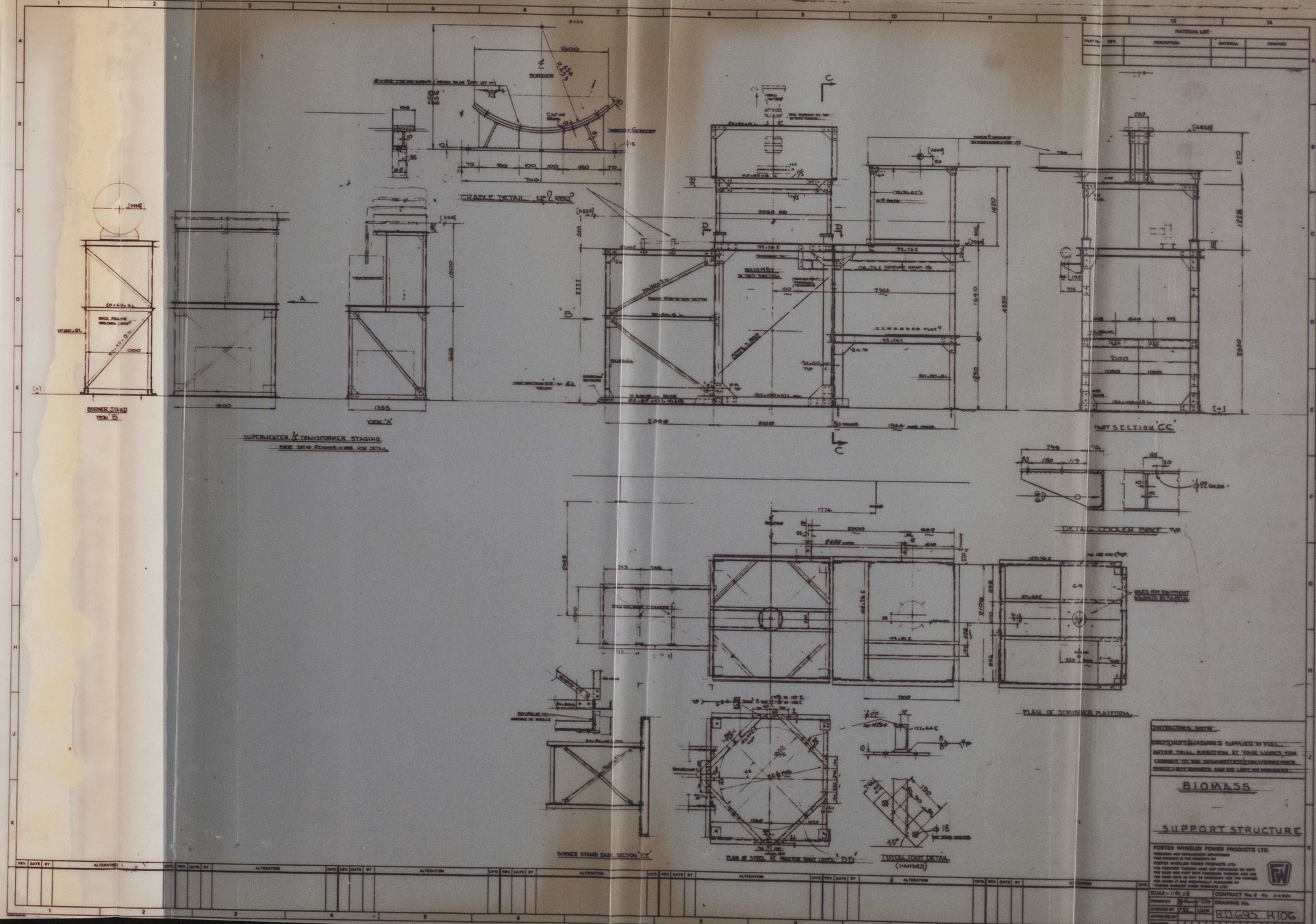

Figure 11.8 Flow Diagram for Gas Chromatograph Sampling and Injection System

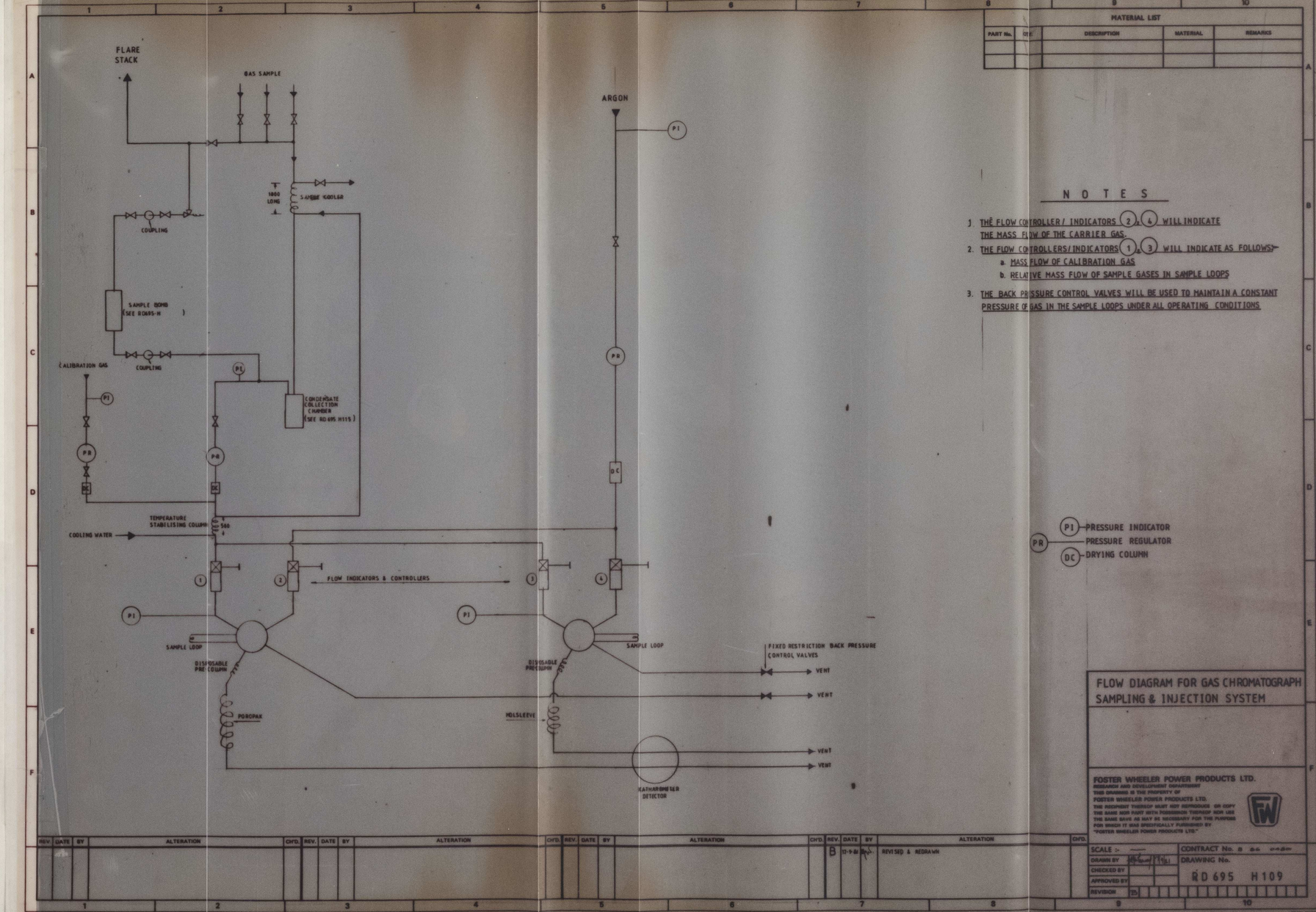

12.0 INSTRUMENTATION AND CONTROL

12.1 General Description

The instrumentation and control systems were divided into three main areas :

a) process control instrumentation
b) research instrumentation and
c) data acquisition.

Process control instrumentation is required for safe and effective plant operation. It was based on a micro-computer system with additional electro-pueumatic control loops and a hard-wired system of alarms,interlocks and trips. It included the hardware necessary for temperature, pressure, flow, and level measurement and control and also for monitoring product gas compositions. The research instrumentation was installed to provide additional data and samples to enable the the experimental objectives to be achieved. The data acquisition system allowed the storage and processing of large amounts of data from process control instrumentation. The facility is operated from a central control room located adjacent to the the main plant. It houses the control systems for the instrumentation referred to above. The main system P and I diagram is shown on Figure 3.13. This figure identifies the major plant instrumentation and location.

12.2 Process Control

12.2.1 Process Control Modes

The test plant process control modes were not completely defined because the full range of reactor conditions were not assessed. Being a test plant, it was only possible to provide equipment related to the best performance estimate. The three main categories of instrumentation are noted below:

12.2.1.1 Temperatures

Temperatures around the plant are measured either on the surface of the vessels/pipes using BICC surface couples or duplex Cr/Al thermocouples sitting in thermowells. All couples were connected to the measuring instrumentation by compensating cable. A disappearing filament pyrometer would be used to check furnace flame temperaure where low pressure operation permits the use of a sight glass.

12.2.1.2 Plant pressure control

A Fisher pressure control valve was mounted on the product gas exit line from the scrubber. This control valve is operated by a Foxboro 130 m N4 pressure indicating controller (PIC). A pressure transmitter was located downstream on the blower knockout vessel. This provides a signal to a Foxboro E69R current to air converter, which is linked to the PIC and the control valve. The valve actuation was provided by a pneumatic controller operating on a 50 - 125 psi air supply (instrument quality). A 22 psi regulated air supply was provided for operation of the PIC and current to air converter. The signal from the pressure transmitter to the current to air converter was 4 - 20 mA.

The plant pressure control valve operates on a differential plus integral control signal, to modulate valve position in relation to system pressure variations.

12.2.1.3 Bed level control

Bed level control was allowed for by the inclusion of an ICI 'Gamatrol' source and detector. As previously described (Chapter 4.0) the unit mounted on the inlet throat to the main reactor. It consists of a radioactive ceasium source and detector. Operationally, the detector detects and amplifies a change in attenuation in the throat of the reactor when it is full of feed and empty, converting the detected radiation signal to a 'ramp' function (step change) for locic circuit switching in the feed system. Capacitance and acoustic systems were examined but considered to be unsuitable due to:

a) Requirement for non-intrusive detection (so as not to interfere with feed flow)

b) Low application temperature e.g. capacitance probe has a maximum operational temperature of approximately 200 C. Acoustic detectors have similar temperature restrictions

c) Requirement for mechanical simplicity

A disadvantage of the nuclear (gamma source) switch is that it has to be registered under the radioactive substances act (see Chapter 2.0).

12.2.2 Product Gas Analysis

Product gas was to be sampled and analysed at four points:

a) upstream of the main reactor
b) down stream of the main reactor-before the POX
c) within the POX
d) at the scrubber discharge nozzle

Two principal means of analysis were projected:

i) gas chromatography
ii) combined conductivity, infra-red and paramagnetic

A type 304 Pye Unicam GC was available; this had previously been used for gas analysis on a pyrolysis test plant with some success (repeatability of results) using a 'poropac'(molecular sieve) column. The main gases involved were $CO/CO_2/H_2/CH_4$. The unit was calibrated with a special gas (BCC) having a composition estimated from DEPROG. It was intended that the calibration gas would be re-constituted with actual product gas once the rig was operational. Fig. 11.8 shows the gas analysis circuit.

An MSA gas cubicle was purchased to provide continuous product gas analysis. The individual modules within the cubicle were to be used to analyse the above gases plus O_2. The O_2 meter was interlocked to plant operation(see below -section 12.2.3.1). H_2 was to be measured using a thermal conductivity meter, the other gases(except O_2) by infra-red and the O_2 by a paramagnetic meter(magnetic 'wind'). All reading were output to a data logger and microcomputer (Apple IIe), for record and analysis. The averaged gas (timed) composition was to be used to correct the plant flow rate measurements (see Appendix 11.2).

12.2.3 Safety Interlock Systems

The safety interlock system was set to operate on either:

a) rig shutdown (controlled and emergency)
b) high O_2 (considered emergency)
c) high vessel surface temperatures (greater than 300 C)

Details of the interlock system were developed by a combination of systems analysis and safety review. The specialist systems engineering group within the company determined the interlocks by detailed examination of the P and I drawing, assessment of the process operational requirements and analysis of potentially hazardous plant performance.

12.2.3.1 Main plant interlocks

The main plant interlocks are shown on Figure 4.5, Figure 4.8 and Figure 4.9. The two most important relate to operation of the feed system and detected O_2. The former has been discussed in detail in Chapter 4.0. Summarising: The interlock system prevents the feed valves

a) all opening together
b) opening under pressure

If high O_2 levels are detected the interlocks isolate the burner circuits including fuel/O_2/air and flood the rig with either argon or nitrogen.

12.2.3.2 Local plant interlocks

Local plant interlocks included such operational controls as microswitch trips on the feed bucket system to stop bucket travel and a temperature indicating switch (TISH) on the scrubber inlet to detect and act on temperature excursions under pressure. The interlocks were selected on a case-by-case basis, depending on unit and operation.

12.2.4 Control Room

A small 2mx2m control room was provided for personnel protection and to centralise plant operation. Specialist computing and data logging equipment were to be located in the room. A CO moniter was to be installed to alert in the event of release of toxic gases.

12.3 Research Instrumentation

Research instrumentation needs were not fully addressed because the project did not proceed. Mention has been made of gas analysis and temperature measurement. In addition, full laboratory support was made available. The in-house research instrumentation included:

Thermogravimetric analysis (TGA)
Scanning electron microscope
Ash fusion furnace

The in-house instruments were to be supplemented as dictated by the programme needs.

12.4 Data Acquisition

Plant data lines including temperature, gasflow, gas analysis and pressure; were passed to the control room for recording either on a multi-channel data logger or chart recorder. All measurements were to be timed to permit retrospective analysis. Critical 'real time' readings were fed to a dedicated microcomputer for on line monitoring. As for the research instrumentation , the data system was proposed for development as the shakedown trials progressed.

13.0 SAFETY

13.1 Introduction

During recent years attitudes towards safety have changed significantly. Prior to the change precautions were considered by management to be time-wasting and excessively expensive and by workers to be an unnecessary imposition. It is now understood that it is the accidents, not the safeguards, that waste the money. Dangerous conditions - even without accidents - can result in legal action, including time-wasting modifications or prohibition orders, and sometimes prosecution. Safety is now considered to be an essential ingredient of good management and efficient workmanship. The FWPP interpretation of the Health and Safety at Work etc. Act, has been presented in Appendix 2.1. It was against this background that the pressurised test rig was designed and built. An outline plant description was presented in chapter 3.0 and specific elements within the plant were examined in the following chapters.

The safety considerations outlined in this chapter are indicative only. No listing can ever be comprehensive and the discussion which follows is only intended to present some general ideas related to the design and operation of the test facility and serve as a reminder and a guide.

13.2 Hazard Analysis

The general plant process and instrumentation drawing (P&I) is shown on Figure 3.13. This P&I was developed from a simple schematic similar to Figure 3.1 which sets out the basic plant elements and interconnections.

Hazard analysis was undertaken in a number of sequential exercises which included the following areas:

a) Establishment of properties of process mixtures

b) Examination of process routes in relation to safety
c) Process reliability
d) Start-up and shut-down of plant
e) Process and mechanical design
f) Operating limits (including excursions)
g) Personnel protection
h) Plant layout

Considering each of these in turn:

13.2.1 Properties of Process Mixtures

The properties of the process mixtures were estimated by reference to previous work undertaken by co-workers in the field and by application of chemical equilibrium procedures. Both of these have been discussed in Chapter 2.0. Although chemical equilibrium studies were used to provide information, in relation to gas compositions, it was understood that the reliability of this information was limited by the inability to accurately model pyrolysis reactions.

Typical gas composition variations with, for example, a steam-oxygen gasification medium, are shown in Figure 2.1. Hydrocarbons, such as acetylene or ethylene, are also produced but the indications are that these are only present in small percentages at gasification temperatures greater than 7-800 C (less than 1-2 volume percent).

The individual components were studied in relation to potential toxicity and flammability hazards. Hydrogen was shown to be a major risk component (flammability) as was carbon monoxide (toxicity). All design input was screened to accommodate this finding and where necessary the design was adjusted to limit potential effects; for example including pressurised purged seals on the ash removal screw (see chapter 7.0). During running, the main ventilation fans would be in operation.

13.2.2. Process Routes

It has been noted that the plant was to be designed for versatility. Chapter 5.0 discusses alternative reactor configurations and Table 14.3 the ranges of experimental parameters. Each of the potential gasification medium was examined in relation to the process effects versus safety. It became evident that the major potential hazard situation would arise when oxygen was being employed in the gasification process. Four uses of oxgen were projected within the plant:

1) **Oxy-propane burner**
2) **Steam oxygen gasification**
3) **Oxygen gasification**
4) **Partial oxidation of gasification products**

These four options could be employed either individually, or in combinations. In all instances the hazard situation identified was to have "free" oxgen in the system with a flammable gas mixture present or being produced. Two principal precautions were taken in relation to the oxygen use within the plant:

1) Continuous oxygen analysis both upstream and downstream of the main reactor linked to an emergency shut-down circuit, which in turn was interlocked with an inert gas purge and vent system as shown in Figure 13.1. The test plant was designed to automatically close down if greater than 0.25% (volume) oxygen was detected, simultaneously isolating the burner ignition system, flooding the plant with inert gas and opening the main pressure control valve, to vent the gaseous products to flare.

2) Because of the safety analysis, it was decided that certain reactor configurations could not be used with oxygen. The cross-flow reactor is a case in point due to its narrow bed width which could allow 'rat-holing'

or channelling. Figure 14.2 summarizes the reactor configurations in relation to the selected gasification medium.

A further precaution taken in relation to use of oxygen was to specify the oxygen system with a key-lock delivery. This comprised two Worcester ball valves, an operating handle linking the valves and two locks. To operate the system it is necessary to insert the untrapped key into the lock and move the handle until the second key can be removed. In this way oxygen could only be delivered to the plant by calculated intent.

Oxygen is fed to the burner from a central control console which has the capability of starting, stopping and controlling the amount of oxygen flow. The console was designed to shut off the oxygen flow if any external safety interlock was operated, the oxygen supply pressure dropped, the burner furnace pressure rose or any off push button was operated. When the start push button is pressed, compressed air fills the valve actuators, which in turn open the shut off valves.

13.2.3 Process Reliability

The considerations of process reliability dealt with both equipment failure and variability of the process operations within the proposed experimental programme. In particular the resultant effects of making system changes were examined (see Table 14.3).

No back up provisions were made for fans or pumps etc. These were linked into the overall hardwired interlocks for the plant and any failure was allowed for by close-down. In the case of the solids feed system (see Chapter 4.0), valve failure could result from both jamming by feed and through temperature excursions. In this area, the potential hazard of gas venting was avoided by interlocking valve operation both on a temperature and

pressure basis.

A triple valve assembly was employed in the solids feeds system, with the lower valve acting as a heat shield. The interspace volume between the lower valve and the valve immediately above it, was pressurised with inert gas up to the reactor pressure to minimize the pressure drop across the lower valve. If temperatures in excess of 600 C were detected in this area, the plant interlocks operate and the plant would close down. Similarly, if a differential pressure in excess of 250 mm (10 in) H_2O was detected across the lower valve with a temperature in excess of 300 C, the plant would close down.

Generally, any particular plant unit being considered was viewed as being potentially unreliable. Safety precautions allowed for automatic close-down of the plant in situations where the potential unreliability could give rise to a hazardous situation.

13.2.4 Plant Start-up and Shut-down

The test plant was designed to allow for various operational modes: start-up, shut-down, maintenance, inspection and construction, normal and abnormal operation. Particular routines were not defined. The specific possibilities were to have been the subject of a series of detailed technical notes but because the project was terminated they were not written.

A few key points are worth noting:

13.2.4.1 Purging

Prior to undertaking any experimental work, it was anticipated that the plant would be pressurised with inert gas up to the projected operational pressure. A halagon leak detector was to have been used on all major valve connections in the plant. By introducing a halagon gas

into the plant (BOC special gases), leaks could be detected and taken up. In this way leakage of toxic/ flammable gases could be avoided. On shut-down the purge system was designed to flood the plant with inert gas. No plant access was to be permitted until the gas sample analyser indicated a negligible amount of carbon monoxide (less than 50 ppm) and less than 0.25% (volume) hydrogen.

13.2.4.2 Venting

A water operated Venturi ejector was installed in the vent system to create a negative pressure in the vent lines which were located in various places around the plant - see Figure 3.13. The vent system was designed to discharge to the flare described in Chapter 11.0.

The type of precautions which were taken in relation to preventing release of hazardous gases to atmosphere may be gauged by noting for example, that a special rubber "boot" was installed around the spindle of the control valve to direct the unavoidable gas leakage along the shaft to the vent system, whilst maintaining the function of the control valve. This represents a ´typical´ concern which reflects the special requirements of a pressurised gasification facility.

13.2.4.3 I.E.E. Statutory Regulations

To comply with statutory regulations and to avoid having a source of ignition or a personnel hazard, electrical/ instrumentation facilities were installed in accordance with I.E.E. (Institute of Electrical Engineers) regulations. The operating plant was considered to be classified as zone 2 in accordance with the criteria for classification given in Appendix 2 of the I.E.E. regulations [13.1]. A useful chart for determining the classification zone is reproduced in Appendix 13.1 [13.2].

13.2.5 Process and Mechanical Design

13.2.5.1 Process Design

Process design was developed from an assessment of the reaction conditions needed to produce synthesis gas; these include:

a) Temperature - in excess of 700 C
b) Sub-stoichiometric atmosphere - approximately 80%
c) Carbonaceous feed (biomass)
d) Pressure - up to 30 bar g

The DEBPROG programme described in Chapter 2.0 and Appendix 2.5 was used to establish heat and mass balances. The investigation took into account operational extremes of high and low temperature in conjunction with high and low pressures. In this way it was possible to visualize the process "envelope". This was one area where the influence of oxygen injection was noted, in that for a very small addition of oxygen a dramatic change in heat output could be observed, as shown in Figure 2.5. Although the equilibrium assumptions are not entirely valid, there was sufficient indication that process control could be difficult and potentially hazardous. This led to the limitations previously described for oxygen use in the system.

13.2.5.2 Mechanical Design

The mechanical design of the plant has been described previously in some considerable detail, and will not be dealt with further, other than to observe that all the mechanical design was performed in compliance with the applicable codes or standards. These, by definition, include factors for safe reliable operation within the physical limits of the materials being used and the operational environment.

13.2.6 Operating Limits

Operational limits for the experimental parameters are specified in Table 14.3. These represent the typical maxima used in the design. The conditions maintaining outside these ranges were usually accepted as hazardous. The rule adopted was to set up alarm/close down interlock to cause the plant to fail 'safe'. Vessel surface temperatures were analysed by a dedicated microcomputer (Apple IIe) which was programmed to detect either high or low temperature excursions and for critical zones such as reactor flanges initiate an automatic closedown if the maximum allowable tempeature of 300 C was reached. Prior to closedown, a preset 'temperature high' alert would be initiated by the computer.

13.2.7 Personnel Protection

Protection ranged from provision of special fire fighting equipment to insulation of external hot surfaces. Technical notes were to be compiled and circulated to operating staff, to instruct and advise on topics such as carbon monoxide poisoning, handling of scrubber liquor (contaminated with pyroligneous acid and tars), oxygen hazards, evacuation procedures and so on. The notes were not prepared for the reason noted above-project termination.

13.2.8 Plant Layout

Being located within a relatively congested test plant building restricted layout scope. Ideally the plant should have been built in a clear area but technical problems (provision of services) and financial constraints did not allow this. The dominant feature in layout design was to ensure that personnel had unrestricted access and escape routes. The access was for day-to-day maintenance and also problem identification. Access to the upper feeding system was restricted because it was :

a) High level
b) A high leak risk area (CO/H_2)

The layout was also constrained by the requirement to draw the support structure apart to permit installation of the POX.

In conclusion; the above notes do not adequately describe the requirements of a formal HAZOP safety study and must not be used for such without a major amplification of detail.

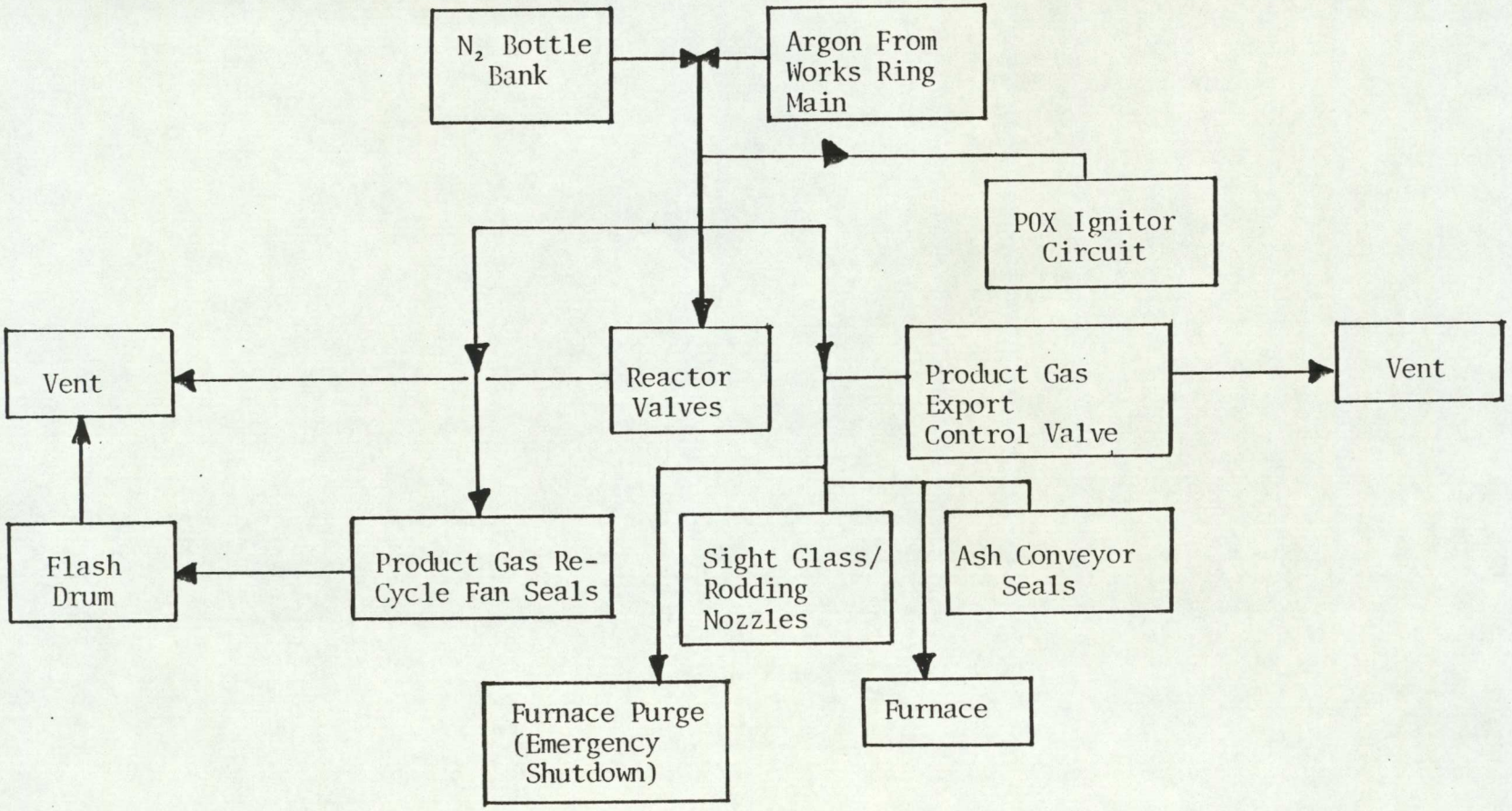

FIGURE 13.1 INERT GAS DISTRIBUTION

14.0 PLANNED EXPERIMENTAL PROGRAMME

The test plant was designed for experimental trials up to 30 bar g, but as discussed in chapter 4.0, the difficulties experienced in obtaining high pressure valves for the feed system resulted in the decision to limit the continuously operational test plant pressure to a maximum of 10 bar g. Depending on the outcome of the experimental work, the studies could be extended to higher pressures of up to 29 bar g by operating in batch mode (not 30 bar g due to scrubber de-rating as discussed in chapter 8.0). This area was not examined in detail. Limited theoretical studies as discussed in chapter 2.0 , suggest that 10 bar pressure is sufficient to provide a reasonable test of the effects of pressure on product gas composition and that an increase of pressure to 29 bar g could have relatively little effect (see Figure 2.1).

To minimise operational costs by avoiding a permanent shift system, a constraint was placed on the experimental work in relation to duration of each test. It was decided that each test would be run for no more than about 8 hours. This would be preceeded by an 8 hour warm-up/conditioning (refractory soak) period and be followed by an 8 hour cooling period. To ensure that a proper, detailed evaluation of each experiment could be undertaken before commencing the next in the series, an average time of 2 weeks was allocated to each experiment. It was recognised that the early experiments in each configuration may however require additional time, due to the many operational uncertanties. A programme of 16 experiments was planned to take place a over a period of 12 months. This programme included an allowance for installation and commissioning of the POX and the Downdraft refractory (changed reactor configuration).

Preliminary estimates (based on previous experience with

similiar plant), indicate that after a step change in a given parameter such as temperature, stable reactor conditions would be achieved in 1 - 2 hours. Hence it should be possible to test 3 or 4 combinations of parameters within each 8 hour experiment (core time). A timetable and programme was prepared on this basis, for experiments in the four choosen reactor configurations which are:

a) Cross-flow
b) Crossflow+POX
c) Downdraft
d) Downdraft+POX

The test plant in its final stages of completion is shown in Figure 14.1 without the POX in position. The test configurations are shown in Figure 14.2 and are discussed below. The programme details are presented in Table 14.1 and Table 14.2.

14.1 Cross-flow

Experiments with the cross-flow configuration were planned to ´range´ the test facility with the. The main goal being to extend and aquire operational experience through an examination of the effect of pressurized operation on the product gas composition. The relative amounts of hydrocarbons and tars produced was to be studied . The proposed tests also included the injection of air and/or steam but, because of doubts as to the gasflow integrity of the reactor bed, oxygen was not to be used in case ´rat-holing´ or channelling allowed oxygen breakthrough to the down stream line.

Four experiments were envisaged on the cross-flow configuration: 2 at 2 bar and 2 at 10 bar g operational pressure. Notionally, the pairs of tests are duplicates,

but the second test could be used to extend the range of the first, depending on the system performance, and also test for reproducibility.

14.2 Cross-flow + POX

The principal objective in using this configuration, was to study the effectiveness of the POX in cleaning up the product gas from the cross-flow reactor by oxidation or steam reforming the associated tars and hydrocarbons. Initially, only 2 tests were proposed, at 2 bar and 10 bar g operational pressure, but with the expected rapid response of the POX it should be possible to study a wide range of conditions within each test.

14.3 Downdraft

In the experiments on the Downdraft configuration the main objectives were:

a) to determine the throughput capacity of the reactor. There were suggestions that previous studies had never run this type of gasifier up to its limit. Experience with an operational pressure of 10 bar g was considered important in this respect.

b) to study the effects of pressure on the product gas composition.

Air, oxygen and steam and mixtures of these were to be employed in these tests. To provide a reasonable survey of the critical parameters a series of 6 tests were proposed; 3 at 2 bar and 3 at 10 bar g operational pressure.

14.4 Downdraft + POX

The main purpose in using the POX in combination with the Downdraft reactor was to test out the systems' product gas modification ('tailoring') capability. A POX reactor might for example, be used in this way to adjust the H_2/CO ratio to replace a shift reactor or hydrocarbon reformer in a plant synthesising methane. It was proposed that air, oxygen and/or steam would be used in a series of 4 tests; 2 at 2 bar and 2 at 10 bar g operational pressure.

In each experiment it should be possible to examine the effect of system parameters on product gas composition by setting up a a number of different reactor operating conditions, for example, changing the injected gas mixtures composition, altering the temperature or changing the feed rate; a summary of variables is given in Table 14.3 below. The test programme outlined in Table 14.1 provides for review and duplication of most experiments. Within each experiment, provision was made for undertaking an engineering assessment as well as data analysis.

TABLE 14.1

Proposed Experimental Programme

System Configuration	Experiment Code	Test Pressure (Bar g)	Gasification Media		
			Air	O_2	Steam
Crossflow	1, 3	2	x		x
	2, 4	10	x		x
Crossflow + POX	5	2	x		x
	6	10	x		x
Downdraft	7, 9, 11	2	x	x	x
	8,10, 12	10	x	x	x
Downdraft + POX	13, 15	2	x	x	x
	14, 16	10	x	x	x

TABLE 14.2

Proposed Timetable For Experiments

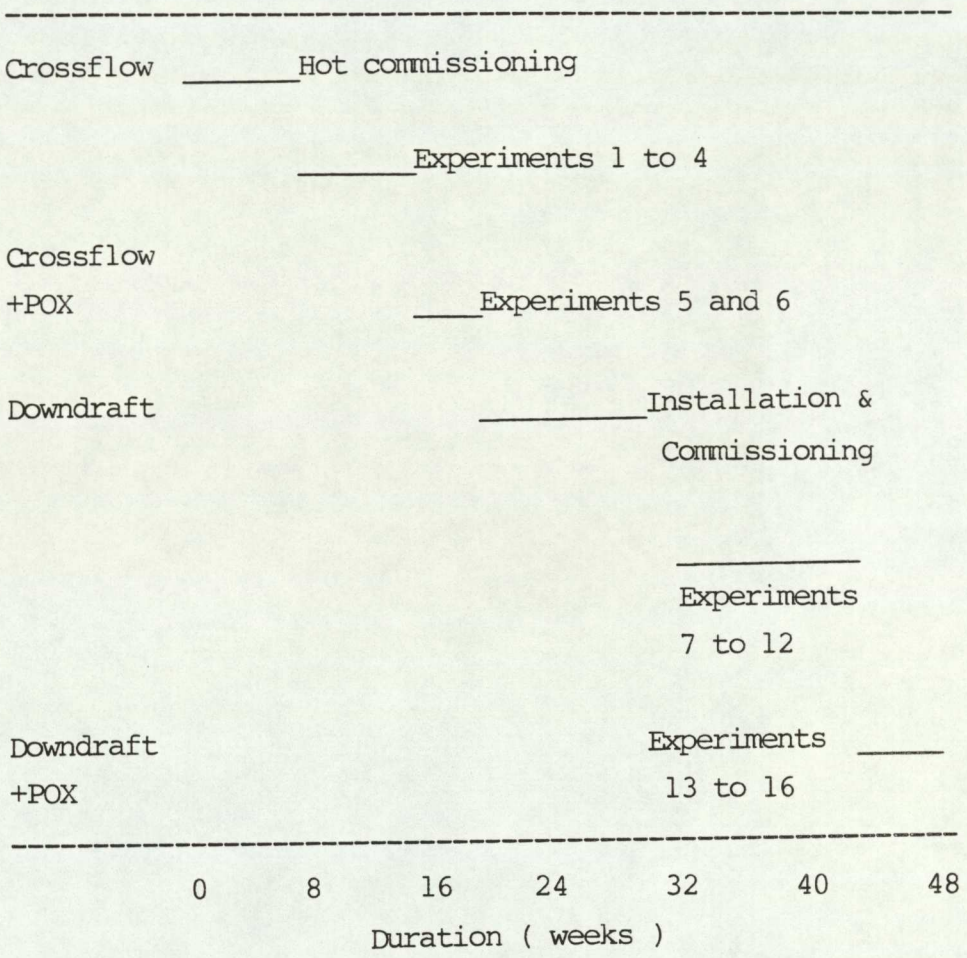

TABLE 14.3

Summary of Experimental Parameters

Variable	Fixed	Range	Comment
Reactor Type	Y		See chapter 5.0
POX (+/-)	N		Not detailed but O_2 use planned
Pressure	Y	2-29 bar g	Two ranges: 2-10 bar g 10-29 bar g
Temperature	N	600-1200 C	Depends on reactor and gasification medium
Feed Rate	N	100 kg/h max	Nominal 40 kg/h (+/-)15
Particle size	N	2-25 mm	Nominally 20-25 mm
Feed Type	N		Only pine feed planned
Moisture	N	10-50% (db)	Not 'true' variable but important
Gasification medium	N		Various combinations inc. O_2/air/H_2O(steam)/ recycle gas/propane
Catalysts	N		Not detailed
Run Time	N		Only short runs planned (8h core time)

Key: Y=yes N=no

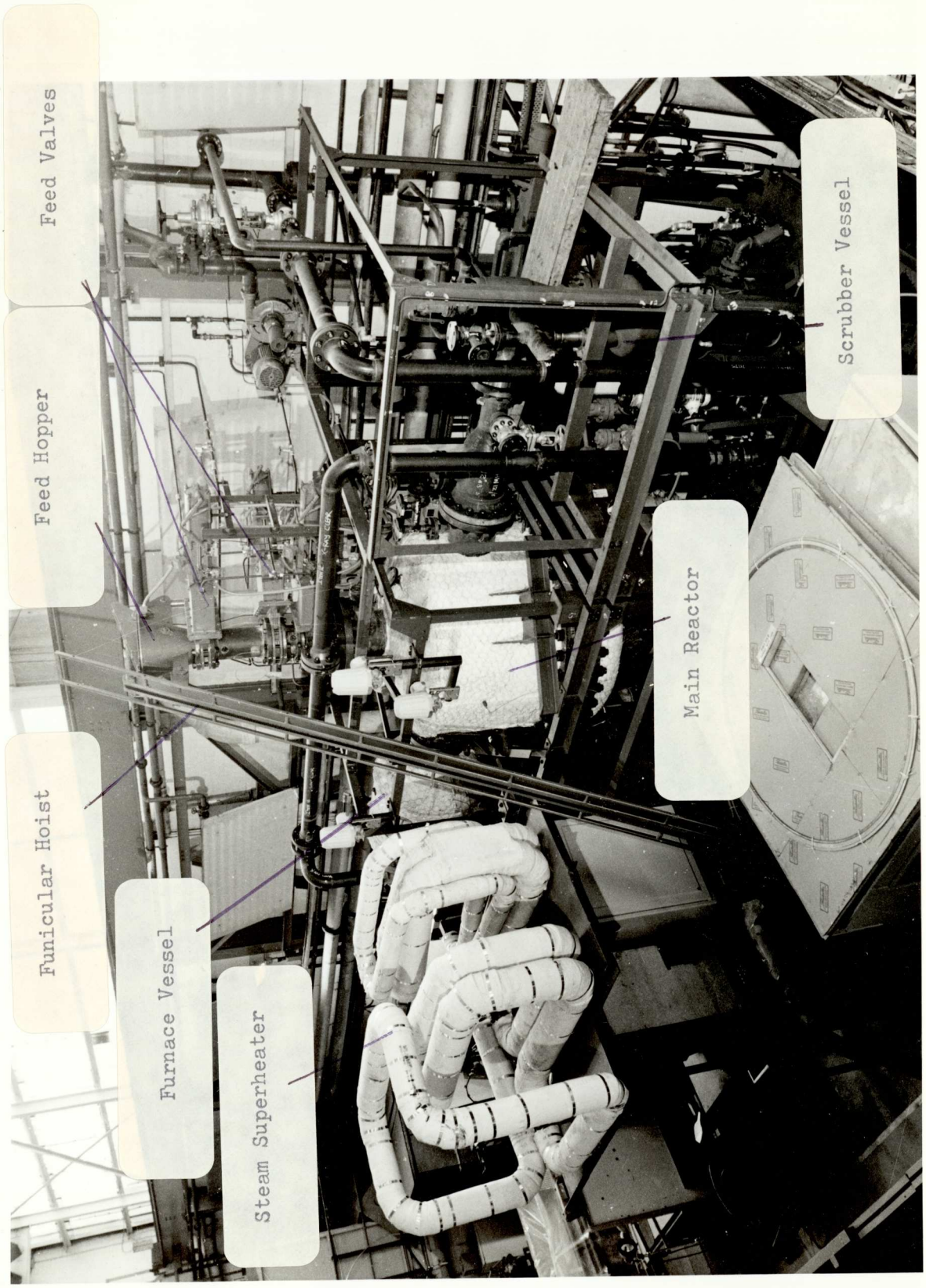

Figure 14.1. Test plant approaching completion.

CONFIGURATION	MEDIUM	COMMENT
Nº 1 CROSS FLOW REACTOR (XFR)	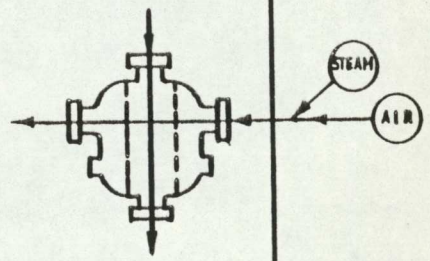	O_2 USE EXCLUDED ON SAFETY GROUNDS
Nº 2 CROSS FLOW REACTOR (XFR) PLUS PARTIAL OXIDATION REACTOR (POX)	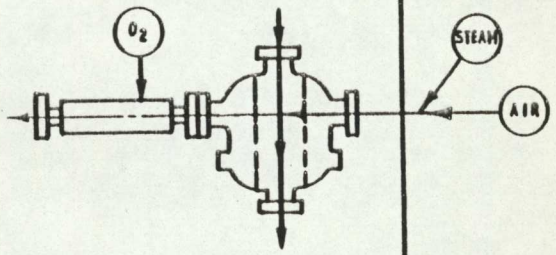	O_2 USE ONLY AT POX
Nº 3 DOWNDRAUGHT REACTOR (DD)	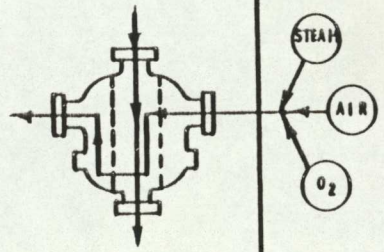	SAME REACTOR VESSEL BUT RE-STRUCTURED REFRACTORY INTERNALS
Nº 4 DOWNDRAUGHT REACTOR (DD) PLUS PARTIAL OXIDATION REACTOR (POX)	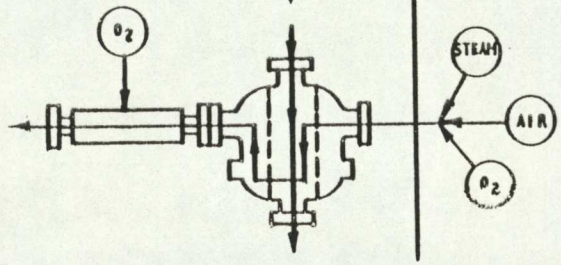	SAME REACTOR VESSEL BUT RE-STRUCTURED REFRACTORY INTERNALS

FIGURE 14.2 - REACTOR CONFIGURATIONS

CONFIGURATION		MEDIUM	COMMENT
Nº 1 CROSS FLOW REACTOR (XFR)	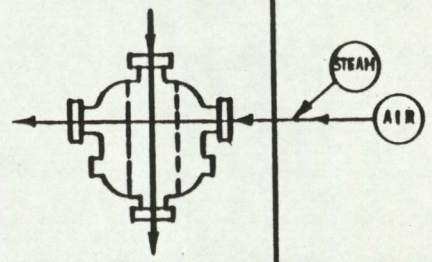		O_2 USE EXCLUDED ON SAFETY GROUNDS
Nº 2 CROSS FLOW REACTOR (XFR) PLUS PARTIAL OXIDATION REACTOR (POX)	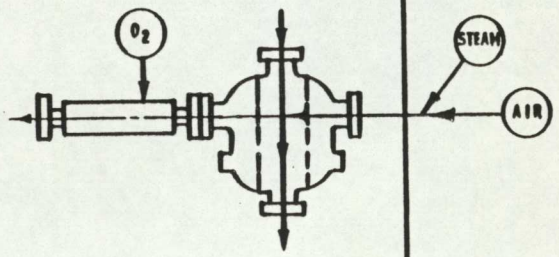		O_2 USE ONLY AT POX
Nº 3 DOWNDRAUGHT REACTOR (DD)	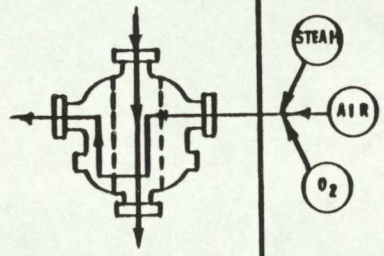		SAME REACTOR VESSEL BUT RE-STRUCTURED REFRACTORY INTERNALS
Nº 4 DOWNDRAUGHT REACTOR (DD) PLUS PARTIAL OXIDATION REACTOR (POX)	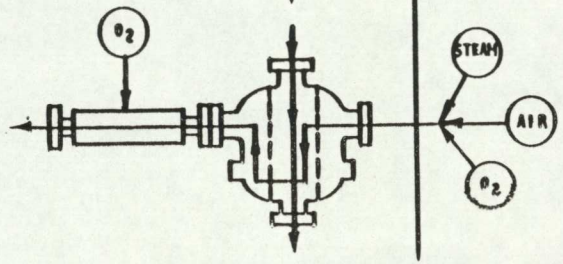		SAME REACTOR VESSEL BUT RE-STRUCTURED REFRACTORY INTERNALS

FIGURE 14.2 - REACTOR CONFIGURATIONS

15.0 TEST PLANT COSTING

15.1 Estimate of Equipment Costs

An initial grant proposal budget was prepared for the test facility and research programme. This was submitted both to the E.E.C and the U.K. Department of Energy (E.T.S.U.). Once these respective organisations sanctioned the work, programme engineering details were finalised and the budget was re-allocated to incorporate the revised scope of work and agreed changes. A breakdown of the initial estimated cost of the programme is given in Table 15.1. The cost estimate details upon which the plant design was based are given in Table 15.2. A breakdown of preliminary and allocated equipment costs is given in Table 15.3. As work progressed it was necessary to obtain a contract extension to cover costs associated with gas analysis equipment which had not been included in the original budget also estimated material costs for linings and valves which were higher than budgeted. An extension of £66,136 was made available. The final project cost summary is shown in Table 15.4.

15.2 Project Expenditure

Table 15.1 shows an inclusive manhour expense of £133,000. This was the total budget for all the reactor configurations which were to be tested. The actual expenditure of £163,185 shown in Table 15.4 indicates an overrun of approximately £30,000. Although the larger part of this was recovered by an agreed contract extension of £66,000 which had a labour element of £27,000, the costs arising were such that all funding for the contract had been expended. The estimated costs for completing the initial programme of work was £112,000. A further contract extension was proposed but, due to the poor prospects of an immediate commercial benefit, it was

decided that the project should be terminated. The main reasons for the overrun are discussed in chapter 16.0.

TABLE 15.1

Breakdown of Proposal Costs

Item	Description	Cost £'s
1	Staff expenses	133,000
2	Mission expenses	15,000
3	Durable Equipment	89,000
4	Non-durable Equipment	14,000
5	Reporting	5,000
Total cost (excluding VAT)		256,000

TABLE 15.2

Proposal Cost Breakdown in Stages

Item	Description	Cost £'s
1	Basic R&D	10,000
2	Design and manufacture	96,000
3	Buildings and accomodation	16,000
4	Construction	8,000
5	Commissioning	20,000
6	Test programme	94,000
7	Dismantling and reporting	12,000
Total cost		256,000

TABLE 15.3

Equipment Cost Breakdown

Item	Original Budget for Proposal (EEC/DoEn) £'s	Final £'s Budget for Purchasing
1 Reactor/Gasifier	24000	26000
2 Reactor feeding system (valves)	11700)	9500
3 Ash handling system	2900)	
4 Feed storage	500	
5 Gas cleaning system	4900	7000
6 Product gas flare	1000	2000
7 O_2 Burner (special)/Furnace	2000	11000
8 Gas recirculation fan	700	1300
9 Product gas storage	900	
10 Ductwork/Pipework/valves	3900	7900
11 Instrumentation/ Controls and electrical*	9500	15500
12 Stack	500	
13 Buildings and accommodation	14000	
14 Maintenance accessories	4000	
15 Refractory/Insulation		2300
16 Propane gas feed system		2000
17 Supporting Steelwork		2000
18 Miscellaneous	500	2500
Total cost	81000	
Inflation provision	8000	
	89000	89000

* Scope: Primary control valve, solenoid valves, thermocouples, switch gear, gas detection, pressure sensing, alarms (No data logging facility budgeted).

TABLE 15.4

Final Cost Summary

	Original Expenditure £'s	Additional* Expenditure £'s	Total** Expenditure £'s
Materials purchased	60,242	7,603	67,845
Miscellaneous	2,787	-	2,787
Sub-contracts	35,258	31,472	66,728
Labour(inc O/H)	163,185	27,061	172,654
Travelling and living	7,356	-	7,356
Totals	268,828	66,136	334,962

* Contract extension

** Full details are given in Appendix 15.1

16.0 DISCUSSION

A considerable number of difficulties were experienced in relation to designing and constructing the pressurised test plant. It is important to identify and highlight these as a positive finding of the programme of work as these difficulties could arise in designing any pressurised gasification plant and the lessons which have been learnt may result in a significant saving in time and cost.

The problem areas fall broadly into three categories:

1) **Technical**
2) **Design**
3) **Management**

16.1 Technical Problems

The first point to note is the effect of selected process parameters on the physical size of the test plant. Optimizing reactor design based on theoretical studies could result in a more compact plant. It was shown in the design exercise undertaken, that there is a large plant scale-up factor involved in translating a reactor design from essentially atmospheric to pressurised operation due to the necessity to maintain vessel integrity at the maximum operating design temperature. In order to avoid the use of 'exotic' alloys, the reactor and burner vessels require to be internally refractory lined. There is an area for balancing choice of material for vessel versus lining thickness. This was not explored.

Although pressurised gasification of coal is an extensively researched subject there is very little information in the public domain on pressurised gasification of biomass, particularly in relation to the

important pyrolysis reactions. It is not clear to what extent coal data can be used for biomass. In terms of determining such critically important factors as tar yield or feed reactivity versus reactor operating conditions, there is a significant gap in our understanding. To gain insight into the process mechanics for the purpose of economic optimization, theoretical models must be employed. In the absence of sound data the use of models must be treated with caution.

The theoretical studies have demonstrated that even simple chemical equilibrium assessments can be useful in providing a qualatitive 'feel' for gasification process dynamics. An example of this, is effect of pressure on product gas composition. It does appear that there is little merit in designing a gasification test plant to operate at pressures much in excess of 10 bar due to the apparent invarience in product gas composition as pressure is raised beyond this level.

The findings suggest that greater pressures would not necessarily yield any further significant information within the limited trials that were being proposed, except perhaps in the area of plant operation such as for example; feed system performance. A commercial plant would probably operate above this level because there is an economic case to consider for applying this principle to a fully commercial facility where subsequent processing of product gas may be undertaken by, for example, the I.C.I. Methanol Synthesis process. There is a definite advantage in having a compression step of, say 5 : 1 (10 bars to 50 bars) versus an atmospheric compression of 50 : 1 for a test plant which apparently demonstrates an invariance in gas composition above 10 bars.

16.2 Design Problems

16.2.1 Design Codes

The constraints of a formal design code are necessary from the point of view of personnel safety, quality control and insurance sanction. The coded design however, introduced a series of design limitations which were both rigorous and time consuming to examine in the necessary detail. It is suggested that in plant of this kind, the design exercise should be modularised to permit a more efficient examination of the various elements, all which require separate investigation to satisfy the various design code criteria.

In the test plant, the ASME VIII Division I code was selected for ease of use and convienience. This may not be applicable in all cases. For example on a larger plant where the material element is significant the ASME VIII Division II or BS 5500 codes may be more appropriate because although more demanding in the design investigation, they permit use of less expensive materials. Final choice must be based on experience.

16.2.2 Safety Considerations

Safety has been discussed within this thesis in chapter 13, and in a number of cases has been highlighted within the foregoing text where the design warranted some special consideration. It should be recognised that an extraordinary number of safety considerations were reviewed at each point in the design. These are too numerous to tabulate but it is important to note that a principal feature of pressurised gasifier design must be a constant awareness of the design implication, not only in relation to specific component selection, but also its impact on the system. Safety considerations are of

paramount importance at each decision level within the design of a test or commercial facility. If this is not recognised there is a potential for serious mishap.

The principal factors which must be under constant interactive review in all aspect of design are:

1) Pressure
2) Temperature
3) Product Gas Composition-Toxicity and Flammability
4) Oxygen/Air Utilisation

16.2.3 Materials

Throughout the development of the plant, materials of construction were constantly in focus in relation to anticipated extremes of operation. Corrosion research and material development is a fertile area and frequently changing. Great care should be taken to establish the important environmental conditions prior to selection of materials and every effort needs to be made to ensure new findings are reviewed.

Two particular areas which should be constantly under review in relation to materials of construction are:

1. **Hydrogen embrittlement**
2. **Stress Corrosion**

On the thermal lining side, development and understanding of refractories is also a changing area which requires careful study. The critical importance of correct selection and installation cannot be underestimated without introducing a potentially major hazard into the design.

16.2.4 Sub-contracted and Bought-out Equipment

An early decision was taken to use sub-contractors to manufacture plant items based on outline designs prepared in-house. This decision was not wholly successful. The sub-contractors performance was in a number of instances less than satisfactory, resulting in design deficiencies, and delays-with the associated cost penalties. The poor performance was linked to a number of areas:

1) Misunderstood design procedures
2) Manufacturing difficulties
3) Industrial problems
4) Inadequate supervision

Considering each of these in turn:

16.2.4.1 Design Procedures

The ASME code is based on relatively trivial but important calculations which are used in accordance with a rigorous procedure. In a number of instances both arithmetic and procedural errors were made by the sub-contracters. The design specifications were also subject to interpretative errors. The resulting confusion led to delays and increased costs. A significant factor to emerge was that inexperience in application of the specified code played a major role. The limited availability of labour for double checking was also a factor.

16.2.4.2 Manufacturing Difficulties

Despite having working experience with Incoloy 800 the sub-contractor nominated to manufacture the superheater components was unable to deal effectively with Incoloy 800H due to its great hardness. The machining had to be further sub-contracted and even then there were

difficulties due to excessive cutting tool damage. On reflection, the choice of Incoloy 800H was perhaps inappropriate. It was selected to avoid the need for a non-zeroing service clock on the superheater determined by tube creep life.

Another area where manufacturing difficulties arose was in provision of the feed valves. As was previously shown, poor quality control by the manufacturer permitted valves with crack damage to be passed as acceptable. It was only due to the stringent approval procedures adopted that potentially hazardous equipment was identified and rejected. The value of simple non-destructive examination should be noted.

The other common problems encountered were:

Late delivery of materials
Defective materials
Incorrectly specified deliveries
Manufacturing errors
Radiographic examination failure

16.2.4.3 Industrial Problems

Due to trading difficulties, the company manufacturing the main reactor was subjected to a take-over. This resulted in timetable delays as the new management adjusted to the company. It was necessary to progress the work on an almost daily basis to ensure completion. The problems experienced with the reactor such as flange distortion, may have arisen due to a relaxation of management control in the period leading to the take-over.

16.2.4.4 Supervision

Without doubt sub-contractor performance would have

improved with additional supervision. There is a balance between adequate supervision and excessive supervision. If contracts are let to responsible tested sub-contractors then it should be possible to limit involvement in the daily decision-making processes. The unfortunate finding in the case of the pressurised gasification plant was that additional supervision was not only desirable but essential. The reasons for this have been set out above. In the situation described, where budgets were limited, the penalties for the additional supervision were severe.

16.3 Project Management

Undertaking the project management for the subject project involved controlling and co-ordinating the complex interaction of innovation, design, manufacturing and construction. It was a demanding role and inevitably both advances and mistakes were made. It is important to highlight the latter area in particular in order to provide support for further work in this area. The two key issues - management and costs are briefly discussed below.

16.3.1 Management Systems

The special needs of the subject project involving both an R&D and manufacturing /design role were not adequately served by existing management systems. In particular, reporting procedures were insufficiently defined to permit the necessary rapid management responses to operational difficulties. Reporting was not performed to the level needed for predictive actions and planning. To a large extent this situation arose from the many problems and difficulties which emerged and hindered the project. The lesson is that the specific needs of this type of project must be clearly defined before commencing work.

The specific needs which should be addressed are:

Design timetable(s)
Design Review/Preview requirements
Sub-contract monitoring
Manufacturing control
Reporting including 'special action' reports
Safety

This listing is not meant to be an exhaustive statement, rather it is one which reflects an awarwness of the deficiencies within a particular experience.

16.3.2 Costing

An immediate finding applicable to pressurised operation when compared with atmospheric operation of a gasification plant, is that there is a direct cost penalty to pay in terms of design. There is also a very significant operating penalty arising from a much more intricate system design with the associated safety requirements. The supply of services to the plant also incur a high penalty for pressurised systems.

This study did not address itself to determination of 'economic' pressurised operation. There may be advantages, for example, in having a pressurised operation slightly above atmospheric for a fuel gas option where a product gas delivery head may have to be overcome. There are many other considerations of this kind which suggest that there are numerous disadvantages to presssurised gasification compared with atmospheric gasification which may penalise final economics to such an extent that the pressurised system will be uneconomic.

A pressurised facility has been shown to be very much more expensive than the comparative atmospheric facility. The

maximum parameters will vary both with application and market forces and would have to be determined separately. This is perhaps a fruitful area for further study.

17.0 CONCLUSIONS

17.1 General Observations

This thesis has addressed itself to some of the major design considerations in relation to construction of a pressurised gasification test facility. A primary goal - to design and construct a test plant - was satisfied. As is evident from the foregoing text, there have been a number of problems both operational and technical. Most of these arose from selection of the projected operating conditions. To an extent some problems could be avoided by choosing a narrower operating range (particularly for a commercial facility). However, there are a considerable number of outstanding technical issues which still require resolution prior to design of a full size commercial plant.

17.2 Findings

1) A pressurised gasification plant must be constructed in such a way, that it will operate safely and economically.

2) Although comment has been passed on difficulties associated with design of the feed in and feed out systems for the plant, it must be emphasized that there are still major unresolved problems associated with achieving a combination of safe, economic (and efficient) operation. Within the scope of the project, evaluations were limited to small scale operation, that is 40 - 100 Kg/h thoughput. It does appear however, that no wholly satisfactory feeding system is available for large scale operation where pressures in excess of 10 bars arise and low bulk density feed is being employed.

3) Pressurised coal gasification is an established

technology which has much to offer to biomass systems particularly in the equipment field. The possibility of cross utilisation of coal technology must be considered further.

4) The out-turn of the project has demonstrated that pressurised gasification is significantly more difficult to achieve and support than atmospheric gasification.

5) Although there is a considerable body of information related to the design of pressurised systems, this is not grouped coherently in a manner which allows comprehensive and efficient design of a gasification system. It will be an important factor for any future kind of plant that an extended preview period be allowed to permit detailed examination of the various options available in many aspects of the plant design. These options cover selection of materials, proprietary plant supply and instrumentation in particular.

6) The value of theoretical work was demonstrated with simple chemical equilibrium assessments allowing a rapid examination of the effect of plant operation under a wide range of conditions. The results should be treated with caution due to the many assumptions which need to be made.

7) The importance of theoretical studies should not be underestimated. The simple equilibrium studies as outlined in chapter 2.0 provide guidance, both in relation to equipment design, and execution of experimental programmes. Once experimental results are available it should be possible to revise these models and develop given systems into commercially attractive ventures, providing always, that the prevailing economic climate is satisfactory.

8) The final phase of this Study which was operation of

the plant in a series of experimental campaigns was not initiated. The decision not to proceed was made on the basis of international fuel prices and the assessment of the technical merits of pressurised gasification versus atmospheric gasification at that time. It was recommended that funding for pressurised gasifier experiment should be discontinued.

9) There is a strong case emerging for supporting an atmospheric gasification programme because atmospheric gasifier design problems are more readily resolved and as an operation - more commercially attractive in the short term.

10) Because of the difficult subject area, the initial projected costs of executing this programme increased substantially due to the many unknown factors which required quantification and resolution. Any experimental work undertaken may also carry a similar cost penalty.

11) As a direct result of experience to date and assessment of the potential economic benefits of a commercial pressurised facility, the case for proceeding with investigation is sufficiently doubtful to suggest that a careful re-think of scope and direction should be considered prior to undertaking further work.

12) There is a strong case emerging for supporting atmospheric gasification studies work rather than pressurised gasification at this time due to the much reduced development difficulties and the possibility of quicker commercialization.

13) The importance of setting up appropriate management systems before commencing work, has been highlighted. It is not sufficient to modify existing arrangements. New systems related to reporting on innovation, design, sub-contractor control and construction should be created. Cost control must be considered as an implicit requirement in relation to management system developments.

14) The use of "exotic" materials, such as Icoloy 800H should be considered very carefully, to balance the ability to satisfy design requirements against possible manufacturing problems.

15) Although no work was undertaken on the fast fluidized bed, the results of the literature search suggest that the technology should be examined in relation to biomass gasification.

18.0 RECOMMENDATIONS

1) Feeding systems for pressurised operation with biomass require detailed, critical evaluation. A study should be performed on the availability and suitability of existing systems to establish their capabilities and limitations.

2) An economic study should be performed, relating pressurised gasification applications and atmospheric applications to market influence such as prime fuel cost.

3) Further work on the pressurised gasification of biomass should be discontinued pending review of the potential for eventual commercialization of pressurised gasification operations versus alternative process options.

4) Atmospheric gasification should be supported because both technically and commercially, it is a more attractive option.

5) Wet scrubber performance with pressurised operation is in need of further work. The case against inclusion of this type of system appears to be based on poor understanding rather than logic. Two principal reservations are oily sludge formation and vapour pressure limitations. Both of these issues are resolvable but equipment requirements need evaluation.

6) There is a very good case for undertaking research on the fast fluidized bed in relation to biomass employing an active catalytic bed. This system offers the possibility of producing medium calorific value gas, low in nitrogren for synthesis applications.

7) The partial oxidation reactor system was constructed but not evaluated. A simple bench scale facility either

pressurised or atmospheric should be used to examine the merits of this facility, which in principle could be employed on most gasifiers to reduce tar levels and modify gas compositions.

APPENDIX 2.1

Health and Safety at Work etc. Act 1974

APPENDIX 'A'

FOSTER WHEELER POWER PRODUCTS LIMITED

OFFICE PROCEDURE MEMORANDUM

12th May, 1983

Reviewed - 26th November, 1985

HEALTH & SAFETY AT WORK ETC. ACT. 1974

The following is an updated statement of the General Policy regarding Safety published in February 1980.

1. The Board of Directors of this Company regards the promotion of health and safety measures as a mutual objective for management and employees at all levels.

2. It is, therefore, this Company's policy to do all that is reasonable to prevent personal injury and damage to property and to protect everyone from foreseeable work hazards, including the public insofar as they come into contact with the Company and its products.

3. In particular, this Company has a responsibility:-

   (a) To provide and maintain safe and healthy working conditions, taking account of any statutory requirements.

   (b) To provide training and instruction to enable employees to perform their work safely and efficiently.

   (c) To make available all necessary safety devices and protective equipment and to supervise their use.

Cont:

(d) To maintain a constant and continuing interest in health and safety matters applicable to the Company's activities, in particular, by consulting and involving employees or their representatives wherever possible.

4. Employees have a duty to co-operate in the operation of this policy:-

(a) By working safely and efficiently.

(b) By using the protective equipment provided, and by meeting statutory obligations.

(c) By reporting incidents that have led or may lead to injury or damage.

(d) By adhering to Company procedures, jointly agreed on their behalf, for securing a safe workplace.

(e) By assisting in the investigation of accidents with the object of introducing measures to prevent a recurrence.

The following is the current Organisation responsible for Safety:-

1. Executive Committee:

Chairman	D. V. Newbold
Works/Manufacturing	J. E. Burdekin
Operations, Engineering, Design and Construction	L. A. Newbery
R & D Design, Rolls-Royce and Associates, Q. I. S. Limited and F. W. A. W. Limited	R. M. V. Beith
F. W. P. P. (Scotland) Limited	S. A. Gait
Legal and Statutory Requirements	A. Highfield
Secretary & Administrative Officer	C. E. Hopper

The purpose of this Committee is to review Company Safety Policy, issue suitable proposals from time to time and generally review progress and performance within our operating activities.

Cont:

2. Chairmen of the Operational Committees:

Brenda Road Works	J. E. Burdekin
Contract Operations	L. A. Newbery
R & D Design, Q. I. S. Limited and Foster Wheeler Automated Welding	R. M. V. Beith
F. W. P. P. (Scotland) Limited	S. A. Gait

The Chairmen of these Committees are fully responsible and answerable to the Executive Committee for maintaining safe and healthy working conditions and for making all the necessary arrangements within the framework of the general policy.

D. V. NEWBOLD
CHAIRMAN

Issued by the Company Secretary's Office:

A. Highfield
Company Secretary

APPENDIX 'B'

FOSTER WHEELER POWER PRODUCTS LIMITED
CONSTRUCTION DEPARTMENT POLICY FOR
HEALTH AND SAFETY AT WORK

ORGANISATION

1. The Construction Departmental Managers are responsible to the Divisional Director for the safety performance of the Construction Departments.

2. The Construction Representative on the Operations Division Health and Safety Committee is responsible for advising the Construction Departmental Managers on all aspects of safety, health and welfare. His terms of reference include executive responsibility for the Construction Department Safety Officers. He will liaise with the Training Manager and arrange training for the various staff levels.

3. Construction Managers and Contract Managers have special day-to-day responsibilities to ensure that the health and safety arrangements are being applied effectively. They review accident reports and progress action where appropriate. They give personal leadership and carefully integrate safety with production and quality.

4. The Site Engineer is responsible for ensuring that the site generally is safe to work in and that all employees are trained to act safely. He must know the broad requirements of the Construction Regulations and other relevant legislation : for this purpose he will be provided with a "Construction Regulations and Information Pack" - see Appendix 'D'. He will nominate a supervisor to ensure legal requirements and safe working practices are observed. On small contracts a site foreman or the engineer himself will be charged with overseeing the health and safety function. On major contracts a Safety Officer may be appointed.

5. The Construction Safety Officer will be based at Rugeley Depot. He will be responsible to the Health and Safety Committee Construction Representative for advising Construction Managers, Contract Managers and Site Engineers on all matters concerning accident prevention. He will act in an advisory capacity to field management at all levels on matters affecting the safety, health and welfare of all employees and of the general public.

6. Supervisors apply the safety rules and procedures. They investigate all accidents which occur on their site or in their section to determine the cause and initiate remedial action. Instructing new employees, making frequent safety inspections in their areas of responsibility and the taking of prompt corrective action are essential. To impart to employees the understanding that accidents can be prevented is an important part of their work. They must be familiar with the Construction Regulations applicable to the work on which their men are engaged and insist that those Regulations are observed. Supervisors must use the issued abridged pocket edition of the Construction Regulations Handbook for reference and ensure that their Chargehands have also been issued with the Handbook (Handbooks are obtained from the Plant Depot).

7. The Plant Manager will be responsible for :-

a) Ensuring that all plant sent to site is safe and efficient, is guarded and equipped with safety devices and is tested in accordance with the appropriate Regulations.

b) Issuing to the Engineer in charge at the start of each contract the "Construction Regulations and Information Pack" - see Appendix 'D'.

c) Checking that periodic tests, inspections and maintenance are carried out on company plant.

d) Attending promptly to all notified plant defects. Call the attention of Site Management to the need for plant to be put out of service which requires attention and/or inspection.

e) Where appropriate, ensuring suppliers of hired-in plant make available copies of current test certificates.

f) Making certain that suitable protective clothing and equipment is issued on receipt of the Site Engineers request.

8. Employees are responsible for acting in the course of their employment with reasonable care for the health and safety of themselves, other workers, the general public and property. They must co-operate with their supervisors and the Safety Officer in seeing that the health and safety rules of the Company are observed.

9. Safety Representatives make proposals on methods of achieving better health and safety standards and practices. They assist in conducting health and safety inspections and investigations and help to improve safety performance by setting a personal example.

10. A Safety Committee should consist of safety representatives and representatives of management and supervision. The role of the Committee is to advise on the efficient and effective development of healthy and safe working conditions and working practices.

11. RULES AND PROCEDURES

A more detailed description of health and safety rules and procedures are in the Site Engineers Office; these are available for any employee to study. The Company is a member of the British Safety Council and of the Engineering Employers' Federation : both organisations may be used for council on health and safety matters.

APPENDIX 'C'

FOSTER WHEELER POWER PRODUCTS LIMITED
CONSTRUCTION DEPARTMENT
EMPLOYEES RESPONSIBILITY

1. Comply with all statutory regulations.

2. Work in a safe manner.

3. Report to your Engineer all unsafe conditions that arise.

4. Report all incidents that may lead to accident or injury.

5. Comply with all rules and regulations made by the Company or by the Clients with regard to safety on sites.

6. Co-operate with the Management in accident investigation.

7. Employees are encouraged to take part in all site schemes which promotes an interest in site safety.

8. Keep your working areas clean and tidy.

9. Safety helmets must be worn at all times in construction areas.

10. Make use of all safety equipment and protective clothing that is available where circumstances require it.

11. Inspect all your tackle prior to use: if faulty, report to your Engineer immediately.

12. Where a hazard has to be created it is important that warning notices are displayed and action taken to prevent injury. Warning notices can be obtained from the supervisor.

13. All personnel should be conversant with the following procedures :-

    a) Summoning First-Aid and Ambulance in an emergency.
    b) Fire Drill procedure on site.
    c) Rules governing complete evacuation of site.

14. Where a "Permit to Work System" is in operation it is your duty to ensure that you fully understand the procedure. If in doubt consult your Engineer.

.../

15. If you should damage any piece of plant or tackle, report it to your Engineer immediately. Damaged tackle lead to accidents.

16. When using abrasive wheels, goggles must be worn.

17. All injuries received during the course of your employment on site must be recorded in the Accident Book and reported to the Supervisor.

APPENDIX 2.2

I.E.E. Statutory Regulations and Associated Memoranda

APPENDIX 2

STATUTORY REGULATIONS AND ASSOCIATED MEMORANDA [ ]

1. In Great Britain the following classes of electrical installations are required to comply with the statutory regulations indicated below. The Regulations listed represent the principal legal requirements. Information concerning those regulations may be obtained from the appropriate authority also indicated below.

Provisions relating to electrical installations are also to be found in other legislation relating to particular activities.

(i)	Installations generally, subject to certain exemptions.	Electricity Supply Regulations, 1937.	Secretary of State for Energy and Secretary of State for Scotland.
(ii)	Buildings generally (for Scotland only), subject to certain exemptions.	Building Standards (Scotland) Regulations 1981.	Secretary of State for Scotland.
(iii)	Factory installations, installations on construction sites, installations of non-domestic caravans such as mobile workshops.	Electricity (Factories Act) Special Regulations 1908 and 1944.	Health and Safety Commission.
(iv)	Cinematograph installations.	Cinematograph Regulations made under the Cinematograph Act, 1909, and/or Cinematograph Act, 1952.	Home Office and Secretary of State for Scotland.
(v)	Coal mine installations, (including stratified ironstone, shale or fireclay).	Coal and other Mines (Electricity) Regulations 1956.	Health and Safety Commission.
(vi)	Quarry installations.	Quarries (Electricity) Regulations 1956.	Health and Safety Commission.
(vii)	Metalliferous mine installations.	Miscellaneous Mines (Electricity) Regulations 1956.	Health and Safety Commission.
(viii)	Agricultural and horticultural installations.	Agriculture (Stationary Machinery) Regulations 1959.	Health and Safety Commission.

2. Failure to comply in a consumer's installation in Great Britain with the requirements of Chapter 13 of the IEE Wiring Regulations places the supply undertaking in the position of not being compelled to commence or, in certain circumstances, to continue to give, a supply of energy to that installation.

Under Regulation 33 of the Electricity Supply Regulations 1937, any difference which may arise between a consumer and the supply undertaking having reference to the consumer's installation shall be determined, in England and Wales, by an inspector nominated by the Secretary of State for Energy and, in Scotland, by an inspector nominated by the Secretary of State, on the application of the consumer or his authorised agent or the supply undertaking.

3. It is understood that as part of the general revision of legislation under the Health and Safety at Work etc., Act it is intended to make new electricity regulations which will replace some of those referred to above. The proposed new regulations will impose requirements for electrical safety in all employment situations and will apply not only to factories but also to premises such as hospitals, teaching establishments, research premises, theatres, hotels, offices, shops and railway premises.

4. Where it is intended to use Protective Multiple Earthing the supply undertaking and the consumer must comply with the Protective Multiple Earthing Approval administered under the authority of the Secretary of State for Energy.

5. For further guidance on the application of some other of the above-mentioned statutory regulations, reference may be made to the following publications:

(i) Explanatory Notes on the Electricity Supply Regulations 1937.

(ii) Memorandum by H.M. Senior Electrical Inspector of Factories on the Electricity (Factories Act) Special Regulations (SHW 928).

(iii) Explanatory Memoranda on the Building Standards (Scotland) Amendment Regulations 1980.

6. For installations in potentially explosive atmospheres reference should be made to:

(i) The Electricity (Factories Act) Special Regulations 1908 and 1944.

(ii) The Highly Flammable Liquids and Liquified Petroleum Gases Regulations 1972.

(iii) The Petroleum (Consolidation) Act 1928.

Under the Petroleum (Consolidation) Act local authorities are empowered to grant licences in respect of premises where petroleum spirit is stored and as the authorities may attach such conditions as they think fit, the requirements may vary from one local authority to another. Guidance may be obtained from the Home Office 'Model Code of Principles of Construction and Licensing Conditions (Part I)'.

7. The Construction (General Provisions) Regulations 1961 administered by the Health and Safety Commission apply to construction sites and contain regulations concerning precautions to be taken against contact with overhead lines and underground cables encountered on construction sites. Special requirements of local authorities and of the office insuring the risk may apply to temporary installations.

8. For installations in theatres and other places of public entertainment, and on caravan sites, the requirements of the licensing authority should be ascertained. Model Standards were issued by the Department of the Environment in 1977 under the Caravan Sites and Control of Development Act 1960 as guidance for Local Authorities.

9. The Electrical Equipment (Safety) Regulations 1975 and the Electrical Equipment (Safety) (Amendment) Regulations 1976, administered by the Department of Trade and Industry, contain requirements for the safety of equipment designed or suitable for household use. Information on the application of the regulations is given in the booklet 'Administrative Guidance on the Electrical Equipment (Safety) Regulations 1975 and the Electrical Equipment (Safety) (Amendment) Regulations 1976'.

10. Where a pictographic safety sign is used for a caution of risk of electric shock, the Safety Signs Regulations (SI 1980 No. 1471), administered by the Health and Safety Executive, are applicable to all new signs.

All the regulations and memoranda referred to in this Appendix, with the exception of that mentioned in Item 4, are obtainable from H.M. Stationery Office.

APPENDIX 2.3

Acceptable A.S.M.E. Reference Standards

TABLE U-3
YEAR OF ACCEPTABLE EDITION OF REFERENCED STANDARDS IN THIS DIVISION

Title	Number	Year
Unified Screw Threads	ANSI B1.1	1974
Pipe Threads	ANSI B2.1	1968
Cast Iron Pipe Flanges and Flanged Fittings, Class 25, 125, 250 and 800	ANSI B16.1	1975
Steel Pipe Flanges and Flanged Fittings	ANSI B16.5	1981(1)
Factory-Made Wrought Steel Buttwelding Fittings	ANSI B16.9	1978
Forged Steel Fittings, Socket-Welding and Threaded	ANSI B16.11	1980
Cast Bronze Threaded Fittings Class 125 and 250	ANSI B16.15	1978
Ring-Joint Gaskets and Grooves for Steel Pipe Flanges	ANSI B16.20	1973
Bronze Pipe Flanges and Flanged Fittings, Class 150 and 300	ANSI B16.24	1979
Wrought Steel Buttwelding Short Radius Elbows and Returns	ANSI B16.28	1978
Square and Hex Nuts	ANSI B18.2.2	1972
Welded and Seamless Wrought Steel Pipe	ANSI B36.10	1979
Ductile Iron Pipe Flanges and Flanged Fittings, Class 150 and 300	ANSI B16.42	1979
Large Diameter Carbon Steel Flanges	ANSI/API Std. 605 3rd Ed.	1980
Safety and Relief Valves	ANSI/ASME PTC 25.3	1976
Piping Fittings of Wrought Carbon Steel	ASTM A 234	1982
Standard Test Methods for Flash Point by Tag Closed Tester	ASTM D 56	1982
Standard Test Methods for Flash Point by Pensky–Martens Closed Tester	ASTM D 93	1980
Marking and Labeling Systems	UL-969	1980

NOTE:
(1) See UG-11(a)(2).

APPENDIX 2.4

DEBPROG Computer Output

The DEBPROG equilibrium model was developed from consideration of chemical equilibrium in the C-H-O system as described in the paper by Gibbins and Wilson reproduced in Appendix 2.5 (pp 374-378).

REAC T (DEG.C)	601.072	654.442	700.198	742.078	783.006	825.991
EXIT T (DEG.C)	601.072	654.442	700.198	742.078	783.006	825.991
PRESS (BARS)	30	30	30	30	30	30
H/O RATIO	2.13133	2.04831	1.9619	1.86887	1.76487	1.64367
EQ CONST'S: K1	.23824	.698531	1.59904	3.19845	5.9705	10.9265
K2	2.66461	2.00716	1.61921	1.35603	1.15819	.996073
K3	.458051	.22635	.131057	.0827429	.0545897	.0364365
GAS COMPOSITION-WET BASIS						
MOLE FRACS: CO	.0263682	.0520957	.0867462	.13082	.185799	.25455
CO2	.230242	.23089	.225605	.214824	.198271	.174889
H2	.124591	.165962	.202687	.234846	.262571	.285587
H2O	.408279	.366464	.325553	.284396	.241927	.196987
CH4	.210519	.184588	.159409	.135114	.111432	.0879869
GAS COMPOSITION-DRY BASIS						
MOLE FRACS: CO	.0445619	.08223	.128618	.182811	.245093	.316994
CO2	.389106	.364446	.334504	.300199	.261546	.217791
H2	.210557	.261962	.300523	.328178	.346367	.355644
H2O	0	0	0	0	0	0
CH4	.355775	.291362	.236356	.188812	.146994	.109571
GAS COMPOSITION-SCRUBBED BASIS						
MOLE FRACS: CO	.0684123	.123089	.189165	.265977	.354944	.459793
CO2	.0621423	.0486496	.0212211	-.0181591	-.0694266	-.134577
H2	.323251	.392127	.441994	.477476	.501607	.515854
H2O	0	0	0	0	0	0
CH4	.546193	.436135	.34762	.274707	.212876	.15893
GAS FLOW (KG/HR): CO	2.4597	4.85503	8.01251	11.8574	16.3395	21.437
CO2	33.7462	33.809	32.742	30.5938	27.3963	23.1416
H2	.836501	1.11321	1.34747	1.53205	1.66196	1.73104
H2O	24.4965	21.9667	19.3413	16.5799	13.6843	10.6702
CH4	11.2471	9.85234	8.43291	7.0139	5.61242	4.2438
TOTAL	72.7861	71.5964	69.8762	67.577	64.6945	61.2237
G.MOLES/HR WET GAS	3330.35	3327.18	3297.65	3235.94	3139.65	3006.62
WET GAS MEAN MOL.WT	21.8554	21.5186	21.1897	20.8833	20.6056	20.363
M3/HR WET GAS	8.06892	8.55338	8.89565	9.10475	9.18997	9.15875
KG/HR DRY GAS	48.2895	49.6296	50.5349	50.9972	51.0102	50.5535
DRY GAS MEAN MOL.WT	24.5046	23.5447	22.7216	22.0228	21.4321	20.9387
GAS SENSIBLE HEAT (KJ/HR)	78202.4	84749.2	88924.5	91039.6	91307.8	89872.5
GAS LCV (KJ/HR)	687860	675409	664337	654275	644976	636252
GAS ENTHALPY (KJ/HR)	766063	760159	753261	745314	736284	726125
H2/2CO RATIO	2.36252	1.59286	1.16827	.89759	.706601	.560963
H2/(2CO+3CO2) RATIO	.167582	.20827	.238369	.25918	.271698	.276258
MAX CH3OH PROD'N (KG/HR)	5.36967	7.74903	10.1942	12.6381	15.0355	17.3453
WOOD DM FEED RATE (KG/HR)	36	36	36	36	36	36
WOOD MOISTURE (KG/HR)	4	4	4	4	4	4
WOOD LCV (KJ/HR)	705226	705226	705226	705226	705226	705226
PYROLIGNEOUS ACID (KG/HR)	0	0	0	0	0	0
P. ACID ENTHALPY (KJ/HR)	0	0	0	0	0	0
ASH & CHAR FLOW (KG/HR)	.18	.18	.18	.18	.18	.18
ASH & CHAR ENTHALPY (KJ/HR)	96.8534	107.594	117.036	125.879	134.698	144.134
OXYGEN FEED RATE (KG/HR)	6.67286E-06	2	4	6	8	10
STEAM FEED RATE	32.9661	29.7764	26.0562	21.757	16.8745	11.4037
CO2 FEED RATE (KG/HR)	0	0	0	0	0	0
STEAM TEMP (DEG.C)	900	900	900	900	900	900
CO2 TEMP (DEG.C)	0	0	0	0	0	0
STEAM ENTHALPY (KJ/HR)	60940.6	55044.2	48167.1	40219.7	31194	21080.7
CO2 ENTHALPY (KJ/HR)	0	0	0	0	0	0
HEAT OUTPUT (KJ/HR)	7.27344	3.99609	14.8398	5.47266	1.32227	37.8438

APPENDIX 2.5

Examples of Author´s Literature

1.0 INTRODUCTION

This appendix lists the author's key literature in the subject area. Particularly relevant literature in relation to this thesis is reproduced. The attached literature is referenced in the summary list by "*". For convenience the literature is divided into patent publications and papers.

2.0 AUTHOR'S REFERENCES

2.1 Patents

[1.0] UK Patent GB 1 562 492B Pyrolysis of Solid Waste. Wilson, H.T., Blows, D.G. 1980

[2.0] * UK Patent GB 2 109 400B Integral Two-Stage Conversion System for Syngas/Methanol Production from fibrous feedstock. Gibbins, J.R., Wilson, H.T. 1981

[3.0] * UK Patent GB 2 087 424B Gasification System. Wilson, H.T., Bridgwater, A.V., Gibbins, J.R. 1981

[4.0] * UK Patent GB 2 106 130B Gasification Process. Wilson, H.T. 1982

[5.0] * UK Patent Application GB 2 150 945A Partial Oxidation Reactor. Wilson, H.T. 1983

[6.0] * UK Patent GB 2 150 149B Gasification Reactors. Wilson, H.T. 1983

[7.0] UK Patent GB 2 090 609B Gas Producing Plant. Wilson, H.T., Blows, D.G. 1984

2.2 Papers

[1.0] Wilson, H.T. Pyrolysis for Waste Disposal - An Assessment. 'War on Waste' Conference. National Agriculture Centre, Stoneleigh, Kenilworth. 21st-23rd October 1975.

[2.0] Wilson, H.T. Pyrolysis - A Further Option for Waste Treatment. Chartered Mechanical Engineer, pp 35-38. December 1977

[3.0] Wilson, H.T. Pyrolysis - A Case for Further Treatment. Process Engineering: Environmental Protection Survey 1978, pp 14-15. January 1978.

[4.0] Wilson, H.T., Fletcher, R. Pyrolysis of Wastes, Recent Developments. First World Recycling Congress, Basle, Switzerland. 8th March 1978.

[5.0] Wilson, H.T., Fletcher, R. The Role of Pyrolysis in the Disposal of Waste Tyres. Published in Resource, Recovery & Conservation. 1981.

[6.0] Wilson, H.T. Pyrolysis for Waste Treatment. Recycling and Waste Disposal, Vol. 1, No. 2.

[7.0] Wilson, H.T., Stockdale, W. Coal Conversion to Low BTU Gas with the FW Two-Stage Gasifier. Paper to Indian Energy Seminar, Delhi. July 1981.

[8.0] * Gibbins, J.R., Wilson, H.T. Some Theoretical Considerations Related to Production of Methanol from Biomass. Solar World Forum, Brighton. 23rd-28th August 1981.

[9.0] * Wilson, H.T., Gibbins, J.R. Biomass Gasification Developments. Proc. Biomass to Methanol Specialists Workshop, Tammaron, Durango, Colorado. SERI/CP-234-890. 3rd-5th March 1982.

[10.0] Wilson, H.T. Progress in the Development of a Test Facility for Biomass Gasification Studies. EEC Co-ordination Meeting of Contractors - Amsterdam 18th-19th September 1980, Copenhagen 23rd-24th June 1981, Brussels 5th-6th May 1982.

[11.0] Gibbins, J.R., Wilson, H.T. Equilibrium Modelling A Cheap and Effective Aid to Gasifier System Design and Analysis. ICE Symposium No. 78 - London, 12th-15th October 1982.

[12.0] Wilson, H.T. Pyrolysis Technology for Energy Recovery from Used Tyres. EEC Monograph: Compendium on Low and Non-Waste Technology. FWPP Ltd. 1982.

[13.0] Wilson, H.T., Gibbins, J.R. Research Objectives in Gasifier Systems Design. FWDC/IHI/FWPP - Research and Development Collaborative Meeting. London, FWPP 31st October-4th November 1983.

[14.0] Wilson, H.T., Coles, R. Thermal Processing of Urban Wastes. EEC Contractors´ Meeting, Luxembourg. 25th-28th September 1984.

[15.0] Wilson, H.T. Combustion (Commercial). Paper to Great Britain/East Europe Centre Biomass Round Table, London. 15th-19th October 1984.

[16.0] Wilson, H.T. Comparison - Evaluation and Optimization of Urban Waste Treatment Technology. EEC Contractor Report No. 2, November 1984.

[17.0] Wilson, H.T. Consideration of Efficiency on the Substitution of Premium Fuels with Gasification Product Gas. Presented to Combustion Inst. Meeting (Portuguese Section), Lisbon. 31st January 1985.

[18.0] Wilson, H.T. Gasification:Summary of Progress. Thermochemical Gasification Contractors´ Meeting, E.T.S.U., Harwell. 6th March 1985.

[19.0] Wilson, H.T. The Utilization of Solid Fuels for Steam Generators. Linetti Institute, Combustion Institute (Portuguese Section). October 1985.

[20.0] Wilson, H.T. The Engineering Design of Burners for Steam Generators. Linetti Institute, Combustion Institute (Portuguese Section). October 1985.

[21.0] Wilson, H.T. Pressurised Gasification Test Facility Construction. CEC Energy. Report EUR 10147 EN. 1985.

[22.0] * Wilson, H.T., Fletcher, R., Davies, R.J. Proposed 20 Tonnes Per Day Biomass Gasification Pilot Plant. EEC Proposal. Contract No. ESE/P/016/UK. 1982

(12) UK Patent Application (19) GB (11) 2 150 945 A

(43) Application published 10 Jul 1985

(21) Application No 8331531

(22) Date of filing 25 Nov 1983

(51) INT CL[4]
C10L 3/00

(52) Domestic classification
C5E AQ

(56) Documents cited
GB 1597150
GB 1556238
GB 1535526
GB 1020014
GB 0549021
EP A1 0022548

(58) Field of search
C5E
B1C

(71) Applicant
Foster Wheeler Power Products Limited (United Kingdom),
Greater London House, PO Box 160, Hampstead Road,
London NW1 7QN

(72) Inventor
Henry Thomas Wilson

(74) Agent and/or Address for Service
Lloyd Wise Tregear & Co.,
Norman House, 105-109 Strand, London WC2R 0AE

(54) **Treatment of reaction product gas & apparatus therefor**

(57) The flow of the product gases in output ducting from a primary reactor is modulated secondary treatment fluids are injected to chemically react with the modulated flow gases. To achieve this a modulating device (24) is fitted to the output ducting (4) from the primary reactor. Turbulence caused by the device ensures that the secondary treatment fluids chemically react with the product gases. The product gases may be generated in the thermal treatment of a carbonaceous feedstock.

Fig.1.

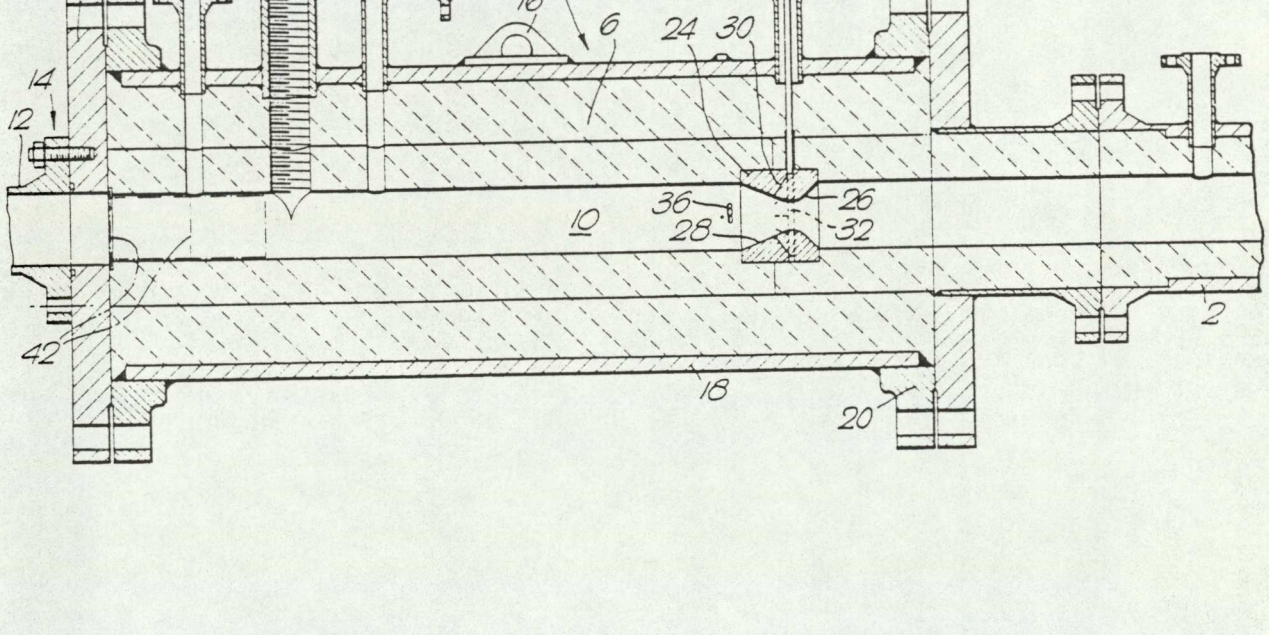

-353-

The drawings originally filed were informal and the print here reproduced is taken from a later filed formal copy.
The claims were filed later than the filing date within the period prescribed by Rule 25(1) of the Patents Rules 1982.

GB 2 150 945 A

Fig.1.

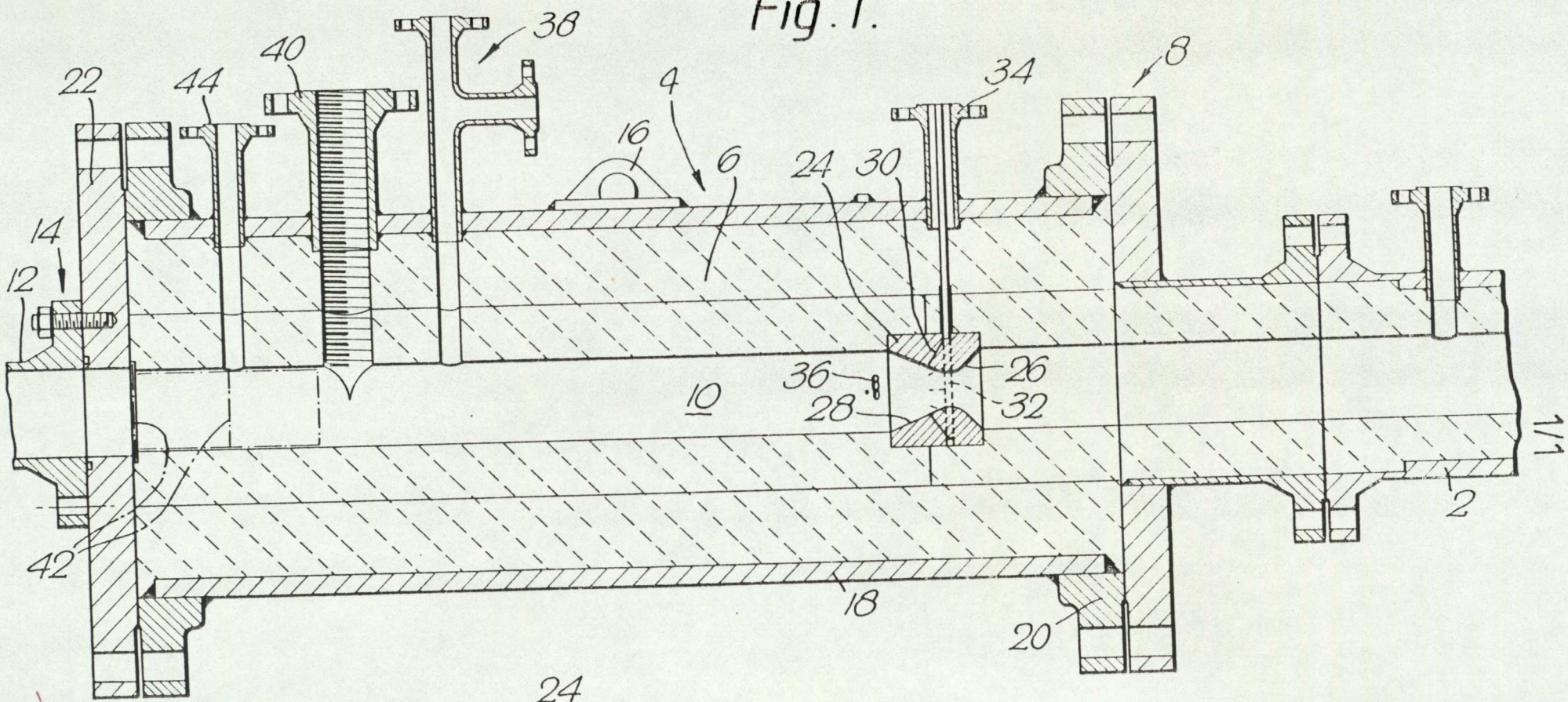

1/1

Fig.2.

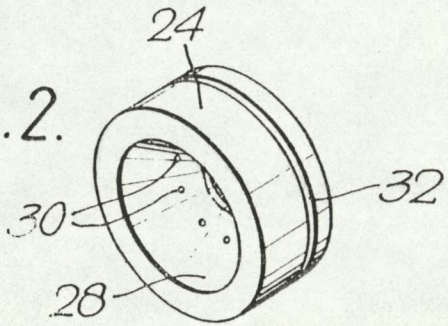

- 354 -

SPECIFICATION

Secondary treatment of reaction product gases

The present invention relates to thermal treatments such as pyrolysis and gasification. Particularly it relates to the secondary treatment of the reaction products, namely the product gases, generated for example from a primary treatment of a carbonaceous feedstock such as biomass.

According to the present invention a device is fitted to the output ducting from the primary treatment reactor which modulates the flow of product gases such that it takes up secondary treatment fluids, such as steam, oxygen, air or combinations thereof injected thereinto. The device is normally made in a refractory material, and is typically in the form of a quarl through which the secondary treatment gases are injected via a series of narrow passageways formed therein, normally fed from a common source. Due to boundary layer effects, some turbulance is created at the ends of the passageways where the product and secondary treatment gases chemically react.

A preferred form of device for modulating the product gas flow takes the form of a venturi with injection passageways terminating in the downstream divergant wall thereof. The venturi may be formed from a body which incorporates a plenum chamber to which the passageways are connected, or from which they extend. For example, the chamber may be defined by an annular groove in the external surface of the body, which, when the device is installed in an output conduit from the primary reactor, is closed by the conduit wall.

In an installation incorporating the present invention, the product gases can be subjected to further processing after the secondary treatment. For example, a catalyst can be included in the ducting, a quench gas inlet can be provided, and provision for mixing the gases with gas recycled from elsewhere in the installation can be made.

The secondary treatment in the present invention is normally carried out at high temperatures, typically primary reactor output temperatures being of the order of 800°C, and high pressures can also be maintained. The device is therefore preferably mounted in a chamber lined with an insulating material. The operative walls of the device can emerge with those of the chamber to render the flow pattern of the gases relatively even.

The invention will now be described by way of example and with reference to the accompanying drawing wherein:-

Figure 1 is a longitudinal cross-section through a duct in the output from a primary reactor embodying the invention; and

Figure 2 is a perspective view of the modulating device incorporated in the duct of Figure 1.

The gas flow in Figure 1 is shown from right to left along a duct 2, 4 lined with a refractory material 6. Product gases from a primary treatment reactor (not shown, such as a pyrolysis or gasification reactor delivered along pipe 2. An unit 4 is coupled thereto by a flange connection 8, which unit 4 defines a chamber 10 in which the gases are subjected to secondary treatment. On the downstream side of the chamber 10, the unit 4 is coupled to an outlet pipe 12 (unlined) by flange connection 14. The chamber 10 is thus contained in a separate component of the duct which can readily be added to an existing treatment installation. A lifting lug 16 is shown for facilitating movement of the unit 4.

The unit 4 comprises a steel cylinder 18 with a flange 20 at the inlet end, and a closure plate 22 at the outlet end. But for a modulating device 24, the cross-section of the chamber 10 is substantially constant along its length. Towards the inlet end the device 24 is fitted. The device 24 takes the form of a venturi tube having convergant (26) and divergant (28) internal wall portions. The tube is mounted in the refractory wall lining 6 wuch that the venturi walls 26, 28 substantially merge with the chamber wall. The device 24 is formed with gas injection needles 30 (bettwen shown in Figure 3) which extend from a plenum chamber 32, and discharge from the divergant (downstream) venturi wall portion 28. The plenum chamber 32 is closed by the chamber lining 6, and fed with secondary treatment gas under pressure through a supply probe 34 which extends through the cylinder wall 18 and the lining 6. As the gases from the primary reactor pass through the device 24 they are recirculated due to boundary layer effects and chemically react with the injected secondary treatment gas. At the outlet from the device 24 burners 36 may be provided to generate controlled partial combustion if desired, the extent of which combustion is determined by the gas flow rate, both of product gases and of secondary treatment gas.

Downstream of the modulating device 24 a gas sampling and pressure probe 38 is fitted. Thereafter further processing units may be installed; a recycle or quench gas inlet 40 and catalyst baskets 42 are shown by way of example. A temperature control and/or monitoring unit is also indicated at 44.

An installation adapted in accordance with the present invention is particularly useful in the secondary treatment of product gases from thermal treatment reactors to modify it or remove condensible organics. As a result a better quality of product gas can be generated.

CLAIMS:

1. A method of treating product gases in output ducting from a primary reactor comprising modulating their flow in the ducting, and injecting secondary treatment fluids to chemically react with the modulated flow or product gases.

2. A method according to Claim 1 wherein the flow or product gases is modulated by a device fitted to the ducting through which device the secondary treatment fluids are injected.

3. A method according to Claim 1 or Claim 2 wherein the product gases are generated from a carbonaceous feedstock, and wherein the secondary treatment fluids comprise at least one of

(12) UK Patent (19) GB (11) 2 106 130 B

(54) Title of invention

Gasification process

(51) INT CL^4; **C10J 3/48**

(21) Application No
8225133

(22) Date of filing
3 Sep 1982

(30) Priority data

(31) **8126894**

(32) **4 Sep 1981**

(33) **United Kingdom (GB)**

(43) Application published
7 Apr 1983

(45) Patent published
27 Nov 1985

(73) Proprietors
Foster Wheeler Power Products Limited
(United Kingdom)
P O Box 160
Greater London House
Hampstead Road
London NW1 7QN

(72) Inventor
Henry Thomas Wilson

(74) Agent and/or
Address for Service
Lloyd Wise, Tregear & Co.,
Norman House,
105-109 Strand,
London WC2R 0AE

(52) Domestic classification
C5E AF
F4B 114 133 GA
U1S 1347 1515 1619 C5E F4B

(56) Documents cited
GB A 2004995
GB 1590341
GB 1585489
GB 1529173
GB 1492516
GB 1411849
GB 1410548
GB 1348860
GB 1307541
GB 1288796
GB 1001310
EP A1 0010048
EP A2 0066563

(58) Field of search
C5E
F4B

LONDON THE PATENT OFFICE

GB 2 106 130 B

Gasification Process

The invention relates to a gasification process and apparatus suitable particularly for coal or biomass. Such processes can produce a raw product gas suitable for conversion to, for example, Methanol.

The present invention utilises a cyclonic reactor in which a raw product gas, typically synthesis gas is produced. We have found that the cyclone design ensures sufficient residence time to ensure good reaction and minimise carry over of particles in the gas discharged.

The process according to the invention comprises passing a particulate feedstock and reaction gas to an upper part of a cyclonic reactor arranged with its cyclonic axis substantially vertical; retaining the mixture of feedstock and reaction gas in the reactor while the feedstock and gas react to produce a raw product gas, and to separate entrained material therefrom; withdrawing the raw product gas from a lower part of the reactor; and collecting and discharging solid and liquid residues. Preferably, the particulate feedstock is carried to the reactor by being entrained in a stream of gas, which stream of gas comprises at least one of said reaction and raw product gases. The gas produced may be discharged via a cyclone filter, from which ash may be recycled to the gasifier. Slag produced in the reactor can be removed from the base via a water quench and lock hopper.

In the process illustrated, finely divided feedstock material is delivered via a reception hopper 2 to an inlet transport line 4 to which steam and recycled product

for the additional steam supply (see above). Any suitable water circulation system may be employed in the reactor shell compatible with the system pressures contemplated (up to 30 bars) and temperatures.

The use of an entrained cyclonic reactor 10 affords the principal advantage of providing a single route for the particualte feedstock which may be selected to give a high residence time under powerful gasifying conditions, without a long tubular arrangement being necessary as was the case with known gasification systems. Further, the cyclonic arrangement permits a certain variety of particle sizes, larger particles being retained in the reactor as a function of inertial forces. However, particle size will be critical to the performance of the system and 1 to 3 mm particles are preferred. The system is though adaptable to a wide variety of feedstocks and the operating parameters will of course vary according thereto.

8. A process according to any preceding Claim wherein the product gas is discharged through a waste duct boiler.

9. A gasification process substantially as described herein with reference to the accompanying drawing.

---

(12) UK Patent (19) GB (11) 2 150 149 (13) B

(54) Title of invention

Gasification reactors

(51) INT CL[4]; **C10J 3/20**

(21) Application No
8331530

(22) Date of filing
25 Nov 1983

(43) Application published
26 Jun 1985

(45) Patent published
15 Apr 1987

(73) Proprietors
Foster Wheeler Power Products Limited

(Incorporated in United Kingdom)

Greater London House
P O Box 160
Hampstead Road
London NW1 7QN

(72) Inventor
Henry Thomas Wilson

(74) Agent and/or
Address for Service
Lloyd Wise, Tregear & Co.,
Norman House,
105-109 Strand,
London WC2R 0AE

(52) Domestic classification
(Edition I)
C5E AF

(56) Documents cited
None

(58) Field of search
C5E

LONDON THE PATENT OFFICE

GB 2 150 149 B

2154149

GASIFICATION REACTORS

This invention relates to gasification reactors, and particularly to reactors in which a gasification medium is fed to a carbonaceous feed as it flows downwards. Such reactors are known as downdraft reactors.

Gasification of carbonaceous material requires controlled addition of oxygen and/or steam to generate the major products; hydrogen, carbon monoxide, methane and carbon dioxide. In a known design of downdraft reactor, feedstock flows downwards in the reactor in plug flow, and is contacted with a concurrent stream of air, oxygen or steam, or mixtures thereof, generating bed temperatures in excess of 800°C. Gasification reactions occur as part of the process of drying pyrolysis and partial oxidation of the charge. The reactions are rapid and generate the product gases referred to. The uncoverted ash residue arising from the feed is discharged from the base of the reactor.

According to the present invention a downdraft gasification reactor has a feedstock conduit with an upper inlet and lower ash discharge outlet, means in the form of an annular collar for feeding a gasification medium to feedstock at an intermediate point in the conduit, and a product gas outlet from the conduit between the collar and the ash discharge outlet. To provide for uniform feeding of the gasification medium to the conduit, the preferred form of collar defines a plenum chamber surrounding and

the body 10 is a conduit 12 from an upper inlet 14 to a lower ash discharge unit 16.

A steam conduit 18 enters the reactor from the left as shown through a steam inlet 20, and feeds steam direct to the conduit at 22. The steam may be supplemented with other gases; i.e. air or oxygen, by injector 24, and its temperature may also be monitored at this point. Downstream of the region 22 collar 26 is disposed around the conduit which defines an annular plenum chamber 28. The plenum chamber 28 receives additional gasification media from injector 30 and distributes it substantially uniformly to feedstock in the conduit 12, either directly or through apertures formed in an inner wall thereof. The collar may take the form of a cylindrical quarl supported in a complementary recess in the refractory body 10.

Initial chemical reaction of the steam and feedstock takes place in the region 22, and secondary reaction within or downstream of the collar 26, Reaction conditions are monitored by the unit 32. Quench gas in the form of recycled product gas is fed to the reacted feedstock by an injector 34. Product gas is removed along duct 36, downstream of the quench gas inlet 34 to gas outlet 38. Reacted feedstock (ash) is removed by discharge unit 16.

CLAIMS:

1. A downdraft gasification reactor having a feedstock conduit extending from an upper inlet to a lower ash discharge outlet; means in the form of an annular collar for feeding a gasification medium to an intermediate point in the conduit; and a product gas outlet from the conduit between the collar and the ash discharge outlet.

2. A reactor according to Claim 1 wherein the collar defines a plenum chamber surrounding and opening into the conduit through which to feed the gasification medium.

3. A reactor according to Claim 1 or Claim 2 wherein the conduit is defined within a refractory body, and the collar received in a recess formed in said body.

4. A reactor according to any preceding claim wherein the collar is adapted to direct a secondary treatment gas to the conduit, means being provided upstream of the collar for feeding primary treatment gas to the conduit.

5. A reactor according to any preceding claim including means for injecting a quench gas to the conduit between the collar and the product gas outlet.

6. A reactor according to any preceding claim wherein the rate of ash removal is controlled by an ash discharge unit at the discharge outlet.

(12) UK Patent (19) GB (11) 2 109 400 B

(54) Title of invention

Integral two-stage thermal conversion system for syngas/methanol production from fibrous feedstock

(51) INT CL^4; C10J 3/00

(21) Application No
8129853

(22) Date of filing
2 Oct 1981

(43) Application published
2 Jun 1983

(45) Patent published
14 Aug 1985

(73) Proprietors
Foster Wheeler Power Products Limited
(United Kingdom)
PO Box 160
Greater London House
Hampstead Road
London NW1 7QN

(72) Inventors
Jonathan Robert Gibbins
Henry Thomas Wilson

(74) Agent and/or Address for Service
Lloyd Wise, Tregear & Co.,
Norman House,
105-109 Strand,
London WC2R 0AE

(52) Domestic classification
C5E AN

(56) Documents cited
None

(58) Field of search
C5E
F4B

GB 2 109 400 B

2109400

Integral Two-Stage Thermal Conversion System For Syngas/Methanol Production From Fibrous Feedstock

For any fuel, pre-conversion pyrolysis can be an advantage because it allows a slurry to be produced without using either hydrocarbon liquids which are expensive, or mixing the untreated feedstock with extra water which can both detract from the quality of the products and increase the oxygen requirements of the system. Also, by-products with a higher value than the final product may be recovered from the pyrolysis reactor output streams.

Undesirable characteristics, such as caking of the feedstock can be obviated in the pre-treatment pyrolysis. Further, impurities such as mineral matter and metallic solids can be removed from the char more easily than from the original feedstock, thereby increasing the efficiency of the main treatment step, and reducing maintenance costs.

Pre-treatment according to the invention can be carried out at locations remote from the main treatment. This means that for dispersed fuel sources, such as crop wastes and forestry residues, low cost pyrolysis plants can be used to concentrate wastes at source, reducing transport and storage costs. Even in a single plant, lower capital and maintenance costs can be achieved in the combination of an atmospheric pyrolysis reactor and a high pressure gasification reactor than in an equivalent high-pressure system without slurry feeding.

pulveriser 14 can be diverted for benefaction at 34 with low grade char if desired. Thus, the quality of the char intake to the mixer 16 can be controlled.

The slurry is pumped from the mixer 16 to a second reactor 36 by a pump 38. The reactor 36 receives oxygen from a compressor 40 and recycled product gas as described below. The second reactor 36 is a high pressure reactor producing hydrocarbon gas and char ash. The ash is removed at 42, either for discharge or recycling to the slurry mixer 16 to further control the composition of the slurry, and the gas fed to a boiler 44. Downstream of the boiler 44 the gas passes through a boiler feed water heater 46 to a gas cleaner 48 from whence water and CO_2 and impurities are discharged. The water may be recycled. The cleaned gas passes to a low pressure methanol loop 50 which discharges to a blow down vessel 52 and to a distillation column 54 from whence methanol can be extracted at 56 and the residue at 58. The residue can be used as a liquid fuel or returned to the slurry as desired. Gas is also extracted from the methanol loop by a gas purge 60 and from the blow down vessel 52 for driving a gas turbine alternator set 62.

The oxygen feed to the reactor 36 is provided from the compressor 40 supplied by an air separator unit 64.

CLAIMS

1. A thermal conversion system comprising first and second reactors, the first being adapted for pre-treating a feedstock by pyrolysis at substantially atmospheric pressure from which a char and a fluid product are produced; means for pulverizing the char; and means for slurrying the pulverized char with a liquid prepared from the fluid product for feeding to the second reactor.

2. A system according to Claim 1 wherein the second reactor is an high pressure gasification reactor.

3. A system according to Claim 1 or Claim 2 wherein the first reactor is a cross-flow pyrolysis reactor.

4. A system according to any preceding Claim including a methanol loop receiving gas from the second reactor.

5. A system according to any preceding Claim including a liquor cycle in which a gaseous product from the first reactor is treated and mixed with water to produce the slurry liquid.

6. A thermal conversion system substantially as described herein with reference to the accompanying drawing.

7. A method for thermally treating a fibrous feedstock comprising subjecting a feedstock to a pre-treatment by pyrolysis in a first reactor at substantially atmospheric pressure from which a char and a fluid product are produced; pulverizing the char and slurrying it with a liquid prepared

(12) UK Patent (19) GB (11) 2087424 B

(54) Title of invention

Gasification system

(51) INT CL^3; C10J 3/22

(21) Application No
8134582

(22) Date of filing
17 Nov 1981

(30) Priority data

(31) 8036863

(32) 17 Nov 1980

(33) United Kingdom (GB)

(43) Application published
26 May 1982

(45) Patent published
17 Oct 1984

(73) Proprietor
Foster Wheeler Power Products Limited,
Greater London House
P.O. Box 160
Hampstead Road
London NW1 7QN

(72) Inventors
Henry Thomas Wilson
Anthony Victor Bridgwater
Jonathan Robert Gibbins

(74) Agent and/or Address for Service
Lloyd Wise, Tregear & Co.,
Norman House
105—109 Strand
London WC2R 0AE

(52) Domestic classification
C5E AF

(56) Documents cited
GBA 2090609
GBA 2069861
GBA 2038866
GB 1458220
EP 0011037

(58) Field of search
C5E

LONDON THE PATENT OFFICE

GB 2087424B

2087424

GASIFICATION SYSTEM

The present invention relates to a gasification system, primarily for biomass substances such as agricultural and animal wastes, forest waste, energy crops, tree bark, straw, corn husks, algal and other aquatic growth. Depending on the precise nature of the process, other more general and industrial waste products can be incorporated, such as plastics materials and rubbers. The process can also be used in the gasification of other hydrocarbon products such as coal or densified refuse derived fuel (D.R.D.F.).

A primary aim of the present invention is to provide an efficient gasificaiton system which affords optimum utilization of the feedstock material with minimum input of additional or auxiliary constituents. While such additional constituents can be used in systems of the invention, the intention is that the cost thereof is at least balanced by increased efficiency resulting therefrom.

According to the invention, a gasification system has a gasification reactor with an inlet for feedstock and outlets for solid and gaseous reaction products; and an hot gas generator comprising a burner and inlets for fuel, oxygen and carbon dioxide, the gas generator being coupled to the reactor along a duct for feeding hot gases thereto, which gases contain sufficient carbon dioxide to be retained in the gases reaching the reactor to enhance the fixation of carbon therein.

A system according to the invention, whcih can operate at high temperature and pressures while permitting adequate control of the reaction to produce the required product,

an export gas product fraction for subsequent processing; i.e., synthesis gas to methanol, delivered through valve 20, and a recycling fraction which can be selectively recycled to the scrubber inlet along line 22 through valve 24; to the generator 6 along line 26 through valve 28; and to the generator burner 30, along line 32 through valve 34. Pumps 36 and a bypass valve 38 are included to monitor the flow.

Provision is also made for recycling a portion of the gaseous reactor products direct to the generator 6 along line 40 via valve 42. The generator may also be supplied with steam injected along line 44. This may be mixed with recycled gas from line 40 at valve 46. The steam is supplied from a high pressure superheater arrangement, indicated generally at 48, via a venturi. This permits a reduction in steam consumption due to steam being present downstream of the reactor. Where some of the product gas is burnt, it also adds to the thermal efficiency of the system as the heat is not rejected by cooling the scrubber liquor.

The burner 30 is shown with CO_2 and air or O_2 inlets at 50 and 52 in addition to the product gas inlet from valve 34, although other forms of burner may be used. The CO_2 is injected via a vapouriser/preheater 54 and assists in the fixation of carbon by changing the CO_2/CO ratio in the reactor 4. The CO_2 may also be injected directly to the generator or the outlet therefrom to mix and react with the hot gas fed to the

CLAIMS

1. A gasification system having a gasification reactor with an inlet for feedstock and outlets for solid and gaseous reaction products; and an hot gas generator comprising a burner and inlets for fuel, oxygen and carbon dioxide, the gas generator being coupled to the reactor along a duct for feeding hot gases thereto, which gases contain sufficient carbon dioxide to be retained in the gases reaching the reactor to enhance the fixation of carbon therein.

2. A gasification system according to Claim 1 wherein the inlet for carbon dioxide is to the burner.

3. A system according to Claim 1 or Claim 2 wherein the carbon dioxide inlet is coupled to a preheater for the carbon dioxide.

4. A system according to Claim 3 wherein the preheater is a vapouriser preheater.

5. A system according to any preceding Claim including a source of steam for injection into the gas generator.

6. A system according to Claim 5 wherein the steam source includes a superheater.

7. A system according to any preceding Claim including means for recycling a portion of the gaseous reaction product from the reactor to the hot gas generator.

8. A system according to Claim 5 or Claim 6, and Claim 7 wherein said recycling means are coupled with the source of steam to inject a mixture of steam and the gaseous reaction product to the gas generator.

SOME THEORETICAL CONSIDERATIONS RELATED TO PRODUCTION OF METHANOL FROM BIOMASS

J. R. Gibbins and H. T. Wilson

Research and Development Department,
Foster Wheeler Power Products Limited,
Hampstead Road, London, NW1 7QN.

ABSTRACT

e paper presents practical and theoretical aspects of the first stage of a bio-
ss gasification research programme. A computer model for gasifier systems is
scribed and results presented from investigations of steam/oxygen gasification,
e effects of gasifier operating pressure and CO_2 recycling.

KEY WORDS

omass gasification, chemical equilibrium, coal gasification, computer model,
thanol synthesis.

INTRODUCTION

response to a 'call for tenders' from the C.E.C. (EEC No. C24317 - Solar Energy
ogramme, Sept. 1979) Foster Wheeler Power Products Limited (FWPP) submitted a
oposal for a research programme related to the pressurised gasification of bio-
ss. The proposed programme contained two main objectives :

1. To examine the effects of process variations on the gasification of biomass for optimising the production of a synthesis gas as feed stock for Methanol production on large scale plants and,
2. To compare the performance of a number of different gasifier reactors under similar process conditions and thus provide a basis on which the most effective reactor could be selected.

e sanctioned work programme, jointly funded by FWPP, the C.E.C. and the U.K.
En.(ETSU), is now well advanced with significant developments in two key areas:
e design/construction of the test facility and a complementary theoretical study.

DESIGN CONSTRUCTION

ne detail design of the 40 kg/hr test plant posed a number of difficult problems
hich had to be resolved in order to progress the plant construction. A major
rea of concern has been personnel safety. The combination of high pressure op-
ration, high temperature, carbonaceous feed and toxic/flammable product gases
(H_2, CO, CH_4 etc.) coupled with a requirement for an oxygen supply facility has re-
ulted in a design which incorporates a large number of safety features. The
lant, which is at this time approaching completion, has been designed for an op-
rating pressure of 30 bar and a maximum temperature of 1200°C.

Solids feeding and removal for the first reactor selected and superheater design were identified as the main problem areas. The solids feed equipment allows material to be continuously batched into the reactor via a pressurised lock hopper and triple slide valve lock system. The lock interspaces are selectively pressurised/de-pressurised with inert gas. Feeding is undertaken on semi-automatic basis with operator initiation of the cycle from a feed low signal taken from a nuclear level detector mounted on the reactor. Ash/char products will be removed on a batch basis,although provision is made for continuous ash removal. The feed system described is only suitable for operating pressures up to 10 bars; beyond this pressure feed will be added using a sealed batch feed system.

Superheated steam at up to 900°C is required for steam-only gasification and single tube superheaters with direct electric resistance heating in the tube walls will be used. Providing steam at the maximum temperature entailed the solution of complex heat transfer and mechanical design problems in respect of the superheater tubes, the inherent difficulties being compounded by the need for variable steam rates. The units are presently under construction.

The facilities on the test plant include an on-line data logger to monitor and process instrumentation signals and give alarm signals if set operating parameters are exceeded. A separate micro-computer dedicated to the data logger will be used to undertake continuous data analysis.

Design of alternative reactor configurations is in hand. The first reactor design is based on the FW-Cross Flow concept. The second configuration will incorporate a partial oxidation step, and the third will be based on the down-draught principle.

THEORETICAL GASIFIER MODEL

A theoretical computer model has been developed to predict gas flowrates, temperatures and other basic rig design parameters and to identify promising areas for investigation in the test program. The model is based on the assumption that the product gases leaving the reactor will be in thermodynamic equilibrium. It deals only with the properties and flowrates of the streams in and out of the gasifier system; the details of processes inside the reactor are not analysed. While aspects such as reaction rates and internal temperature profiles cannot, therefore, be predicted the model can be applied to a large variety of reactor types.

A high level of correlation has been achieved with published experimental performance figures for coal gasifiers of the fixed bed, fluidised bed and entrained particle type, indicating the validity of the basic assumptions.

C/H/O Equilibrium Calculations

A method described by Baron, Porter and Hammond (1976) was used as a basis for calculating equilibrium in the presence of solid carbon, and a similar approach was developed to calculate equilibrium gas composition with no solid carbon. In both cases only five gases will be present at equilibrium in significant quantities under gasification conditions : CO, CO_2, H_2, H_2O and CH_4. Five independent equations are therefore required to calculate the gas composition, and a further one if solid carbon is included. Conservation of each element gives three equations; the remainder can be derived by equilibrium considerations for any suitable combination of reactions.

The reactions and derived equations for the gas partial pressures, where P is the total pressure, are :

Both cases : $CO + H_2O \rightleftharpoons CO_2 + H_2$: $K_1 = pCO_2 \times pH_2/(pCO \times pH_2O)$ (1)

$$\text{d carbon}: \quad C + H_2O \rightleftharpoons CO + H_2 \quad : \quad K_2 = pCO \times pH_2 \times P/pH_2O \qquad (2)$$

$$C + 2H_2 \rightleftharpoons CH_4 \quad : \quad K_3 = pCH_4/(pH_2^2 \times P) \qquad (3)$$

$$\text{solid carbon}: \quad CH_4 + H_2O \rightleftharpoons CO + 3H_2 : \quad K_4 = pCO \times pH_2^3 \times P^2/(pCO \times pH_2O) \qquad (4)$$

equilibrium constants (K_1 - K_4) for a given temperature are calculated using nomial expressions derived from tabulated data.

rall Model

system diagram for the gasifier is shown in Fig. 1. The basic model calcu-es the production composition and the net heat output from the system for en feeds and reaction temperature; this is also extended to give an iter-e method to find the products and reaction temperature that will occur for a en heat output. A number of program versions have been written to investigate influence of various process parameters.

RESULTS

ical results from three areas are presented : steam/oxygen gasification, the ct of pressure variation and CO_2 recycling. Other process variables which been examined include steam temperature, system heat loss, carbon utili-on rate, CH_4 recycling and prime fuel injection.

g a proprietary methanol loop program to process data from the gasifier model nstrates that there is an approximately linear relationship between the meth-content of the gas after cleaning and CO_2 removal and the decrease in methanol d below the theoretical maximum attained if all the hydrogen in the gas was erted. This relationship will be used to identify the promising areas for iled optimisation studies. The utility of methane reforming will be examined he next stage of the theoretical study. High methane contents only occur at (c.500°C) equilibrium temperatures, however, and it is possible that practical

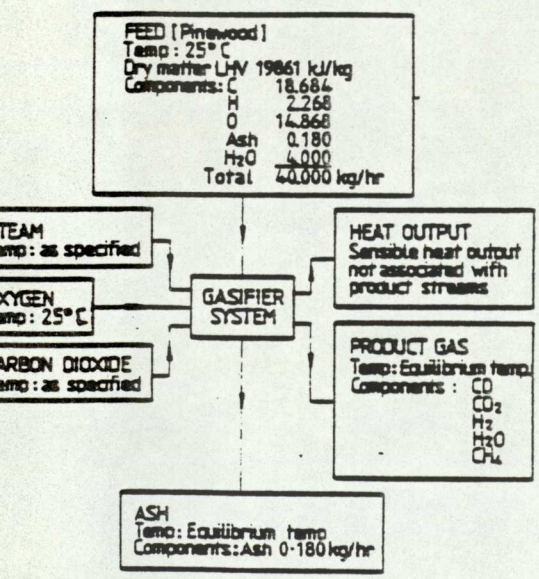

g.1. Mass and enthalpy streams used for all gasifier model results.

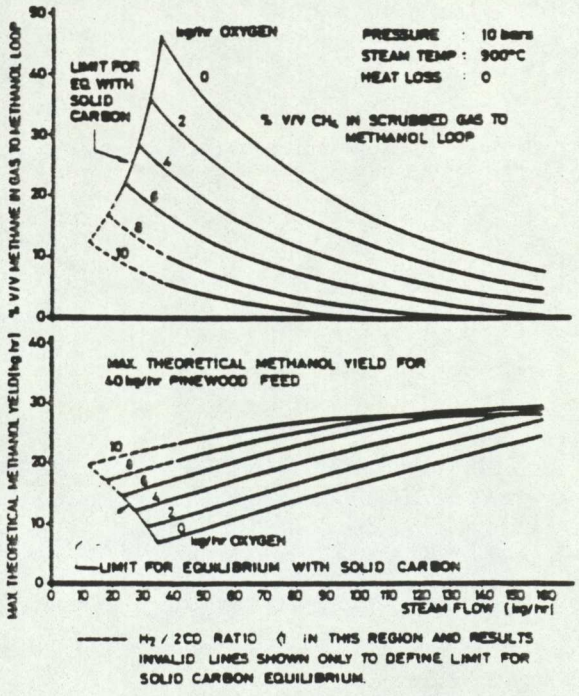

Fig.2. Theoretical methanol production for various steam and oxygen flows.

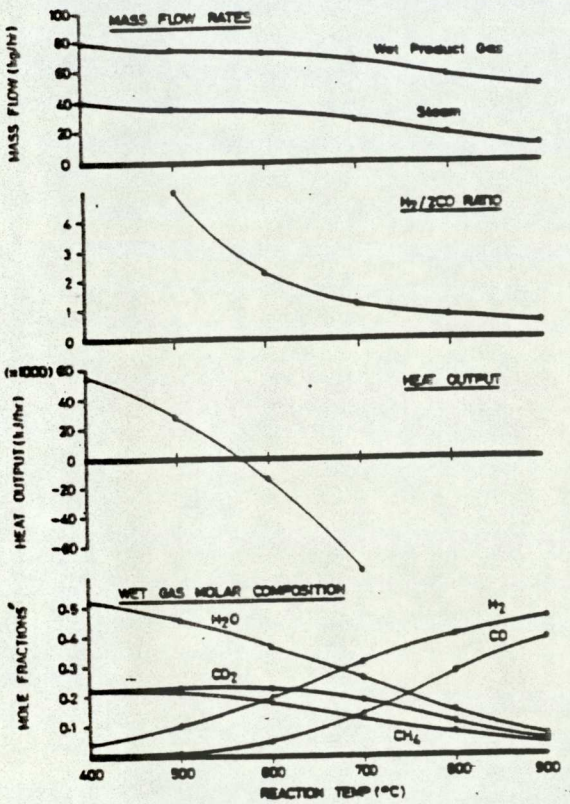

Fig.3. Gasification with steam only at 10 bars. Equilibrium with solid carbon.

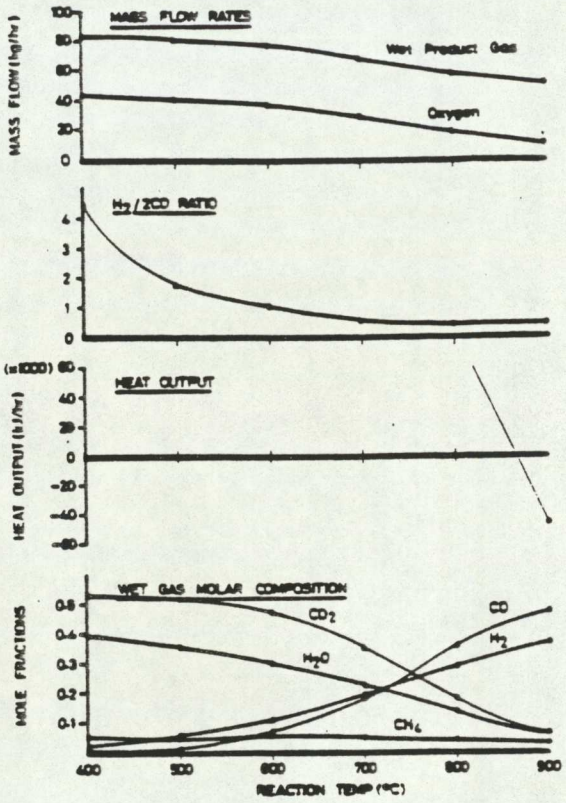

Fig.4. Gasification with oxygen only at 10 bars. Equilibrium with solid carbon.

reactors aimed at producing methane may consequently have low carbon conversion rates and a high pyrolysis product yield.

Steam Oxygen Gasification

Figs. 3 and 4 show gasification with steam only and oxygen only respectively. The product gas is in equilibrium with solid carbon when it leaves the reactor; this gives the minimum amount of steam or oxygen to just gasify the wood. Most reactors will operate at or near zero heat output (i.e. adiabatically); both the operating temperature and the effect of a varying heat loss are very different in the two cases. In neither case is the gas composition particularly suitable for methanol synthesis. Improved results can be obtained, however, by combined steam/oxygen gasification and/or increased steam flows. Fig. 2 shows the effect on CH_4 content and theoretical maximum methanol yield over the range of steam and oxygen flows attainable in the rig.

Effect of Pressure

Le Chatelier's principle predicts that as the pressure is increased CH_4, CO_2 and H_2O will be produced in preference to CO and H_2. The equilibrium analysis for an adiabatic reactor given in Fig.5 shows that the change is most pronounced at low pressures; above about 10 bars the gas composition is virtually unaltered. This can be explained by two factors : the lower percentage increase in total pressure at higher pressures for a given absolute increase and the rise in equilibrium temperature with lower gas calorific value as more CO_2 and H_2O are produced, which tends to counteract the effect of the increasing pressure. If the same invariance with changing pressure is confirmed in practice it may be a useful simplifying factor in system optimisation studies.

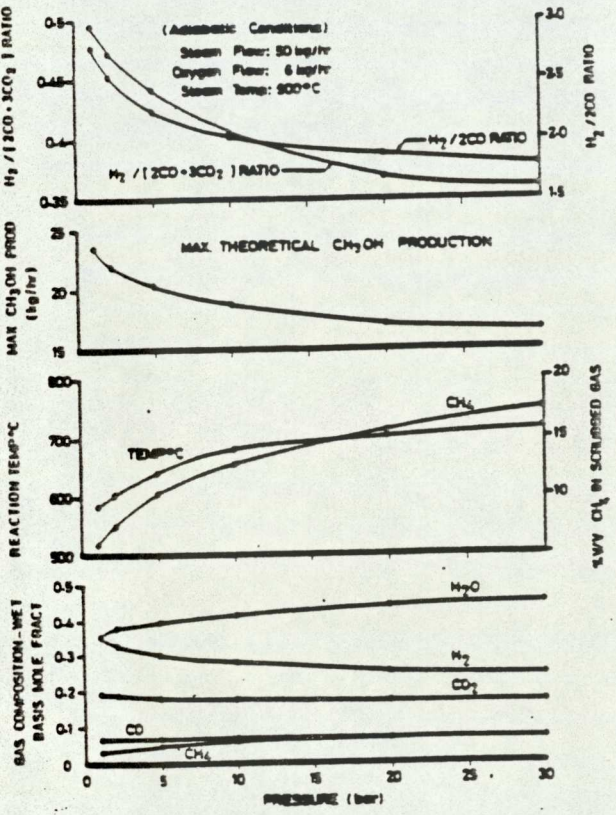

ig.5. Gasification with steam and oxygen Equilibrium without solid carbon.

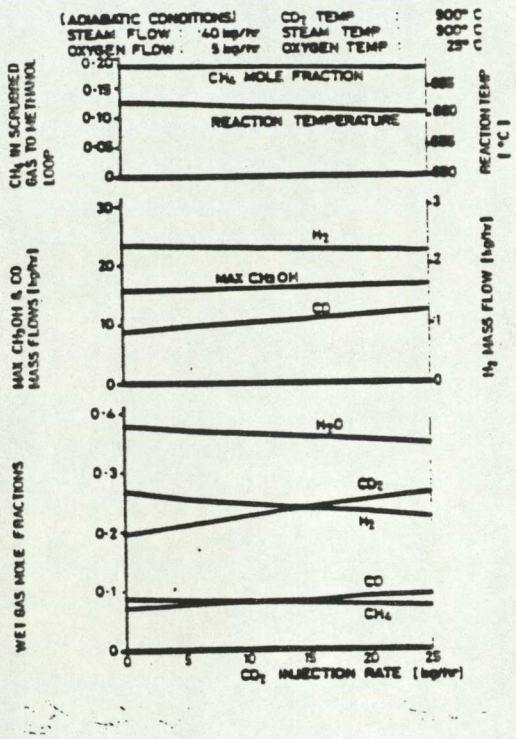

Fig.6. Gasification with steam, oxygen and CO_2 at 10 bars. Equilibrium without solid carbon.

O_2 Recycling

efore compressing the product gas to methanol synthesis pressures the CO_2 content ould be adjusted to the required level, giving a net removal of CO_2 in most cases. possible use for some of the CO_2 would be to reinject it into the reaction zone f the gasifier; this would tend to reduce the amount of feed converted to CO_2 nd hence give a higher yield of CO. As Fig.6 shows, however, the benefits are light mainly because CO_2 injection decreases H_2 production (see Reaction 1) and his largely offsets the greater CO output.

CONCLUSIONS

ubstantial progress has been made in the biomass to methanol programme at FWPP. quilibrium models have been shown to be appropriate for a wide range of gasifier ypes and a number of fundamental aspects of gasification technology have been examined using them. The study has been extended to cover the relationship be- ween methanol yield and the gasifier operating conditions and results from the odel have been used to design the rig and specify the test programmes. The in- formation flow to date has been mainly from the theoretical to the experimental areas of the programme; this will be reversed in the next phase of the project hen experimental data will be used to refine the present computer model.

REFERENCES

Baron R.E., Porter J.H. and Hammond O.H. (1976)

Chemical Equilibria in Carbon-Hydrogen-Oxygen Systems

MIT Press, Cambridge, Massachusetts.

BIOMASS-TO-METHANOL SPECIALISTS' WORKSHOP
March 3-5, 1982 - Tamarron, Durango, Colorado

BIOMASS GASIFICATION DEVELOPMENTS

H.T. Wilson and J.R. Gibbins

Foster Wheeler Power Products Ltd.
Greater London House, Hampstead Rd.
London, NW1 7QN

SUMMARY

The present Foster Wheeler Power Products Ltd. Work Programme related to Biomass gasification is described. A description of a proposed 20 t/d gasification facility is also presented. Theoretical studies on gasification equilibrium thermodynamics, undertaken to complement and support the practical experimental work, are discussed and reported.

The equilibrium models have been found appropriate for a wide range of gasifier types and have provided valuable insight into fundamental aspects of gasifier design and operation.

INTRODUCTION

The present international interests in Biomass as a source of hydrocarbons for a variety of industrial applications continues to escalate. In particular, for those nations lacking the usual indigenous resources of oil or coal, Biomass conversion to Methanol represents a major investment potential which could reduce dependency on foreign imports and assist trade balance. Recognising the difficulties in implementing new technology it is FWPP's view that the lead into the potentially extensive Biomass market should be on a sound practical and theoretical base.

The special expertise FWPP has developed in the area of Biomass processing - particularly during the last ten years is being consolidated. For this reason a proposal was submitted to the U.K. Department of Energy (ETSU) and the C.E.C. (EEC No. C.24317 - Solar Energy Programme September 1979). The proposal, for a 40 kg/h pressurised Biomass gasification test facility was accepted and the work programme is now well advanced. In April 1980 FWPP submitted a further proposal to the C.E.C. related to the second phase of this programme, i.e. design and construction of a 20 t/d Biomass gasification pilot facility (EEC No. ESE/P/016/UK). Action on this latter programme is presently being discussed in the light of the 40 kg/h test plant objectives. Because of the FWPP interest in progressing active Biomass developments, it is considered timely to summarise the available expertise in the subject area.

This paper provides background to present activity and presents practical and theoretical aspects of the first stages of the FWPP gasification programme.

FWPP GASIFICATION PROGRAMME

Background

FWPP has a broad experience in pilot plant projects and specialised expertise in pyrolysis processes. The 'in-house' studies on thermal waste processing have been proceeding since the late 1960's.

Paper studies were instigated in late 1970 by the U.K. Department of Energy (ETSU), to establish the 'state of the art' in pyrolysis and gasification processes. It was considered that this approach was sufficient to indicate a generic approach to the field but that it was not suitable for design selection. FWPP and ETSU, on review, agreed that the direction of research should be to establish optimum process conditions and reactor design for synthesis gas production from Biomass.

The project objectives specified were to design and operate a test rig in order to gain sufficient insight regarding process conditions and reactor mode to design a Biomass gasification rig. This contrasts the more generally adopted approach which is to opt for a particular reactor design for sometimes quite arbitrary reasons.

Parallel ETSU studies (supported) have indicated the premier position of wood in the long term. Consequently it was decided that for upgraded fuel processes such as SNG or MeOH, emphasis should be based on wood.

In addition to the main test facility which is presently being commissioned, ETSU are supporting a programme of work at the University of Aston in the U.K. This programme relates to single particle models and experimental studies on single particles using a thermogravimetric approach. The work between FWPP and UAB is closely co-ordinated.

DESIGN - CONSTRUCTION OF THE TEST FACILITY

A simplified 40 kg/h test facility Process Flow diagram is presented in Fig. 1. Due to the need to establish operational experience and because of time constraints for the arrangement and design of the 40 kg/h test facility, the first reactor to be tested was based on the FW Cross-Flow concept, although the chosen reactor shell design allows for a variety of flow configurations through refractory restructuring and/or shell section replacement, Fig. 2.

The facility now being commissioned has been designed for an operating pressure of 30 bar and a maximum temperature of 1200°C.

Solids feeding and removal for the first reactor selected and superheater design were identified as the main problem areas, although the operational design considerations have necessitated a continuous active appraisal of all components.

The solids feed equipment allows material to be continuously batched

into the reactor via a pressurised lock hopper and triple slide valve lock system. The lock interspaces are selectively pressurised/de-pressurised with inert gas. Feeding is undertaken on a semi-automatic basis with operator initiation of the cycle from a low feed signal taken from a nuclear level detector mounted on the reactor. Ash/char products will be removed on a batch basis, although provision is made for continuous ash removal. The feed system described is only suitable for operating pressures up to 10 bars; beyond this pressure feed will be added using a batch charge arrangement.

Superheated steam at temperatures up to 900°C is required for steam-only gasification. The final design selected allows superheated steam to be generated by passing saturated steam through single tubes with direct electric resistance heating in the tube walls. Providing the steam at the high temperatures and pressures entailed the solution of complex heat and mechanical design problems in respect of the superheater tubes, the inherent difficulties being compounded by the need for variable steam rates.

Facilities on the test facility include an on-line data logger to monitor and process instrumentation signals and give alarms if set operating parameters are exceeded. A dedicated micro-computer will be used to undertake continuous data analysis. The necessary software for the data analysis is under development.

A partial oxidation system to treat the gases emerging from the cross-flow will be evaluated in the second phase of the programme. In this 'add on' reactor, oxygen will be introduced to raise the gas temperature to around 1000°C. Provision has also been made for the introduction of a packed bed of catalyst. Work on the design of this system has been completed and an order has been placed for its manufacture.

A conceptual design for a co-current down-draught reactor has been developed for the third phase of work with the test facility - Fig. 3. The design studies for this reactor have been complemented by the theoretical and experimental work described below.

Experimental programmes for the test facility are now being finalised. The findings of the active experimental programme may lead to re-consideration of the desired reactor configuration for the third phase of work.

Close project co-ordination has been maintained with The University of Aston in Birmingham (UAB) which is undertaking a parallel Biomass programme funded by the U.K. Department of Energy (ETSU).

Theoretical Gasifier Model

Theoretical computer models have been developed to product gas flow-rates, temperatures and other basic rig design parameters and to identify promising areas for investigation in the test programme (2). The models are based on the assumption that the product gases leaving the reactor will be in thermodynamic equilibrium. They deal only

with the properties and flowrates of the streams in and out of the gasifier system; the details of processes inside the reactor are not analysed. While aspects such as reaction rates and internal temperature profiles cannot, therefore, be predicted, the models can be applied to a large variety of reactor types.

A high level of correlation has been achieved with published experimental performance figures for coal gasifiers of the fixed bed, fluidised bed and entrained particle type, indicating the validity of the basic assumptions.

C/H/O Equilibrium Calculations

The method described by Baron, Porter and Hammond (1) was used as a basis for calculating equilibrium in the presence of solid carbon, and a similar approach was developed to calculate equilibrium gas composition with no solid carbon. In both cases only five gases will be present at equilibrium in significant quantities under gasification conditions : CO, CO_2, H_2, H_2O and CH_4. Five independent equations are therefore required to calculate the gas composition, and a further one if solid carbon is included. Conservation of each element gives three equations; the remainder can be derived by equilibrium considerations for any suitable combination of reactions.

The reactions and derived equations for the gas partial pressures, where P is the total pressure, are :

Both Cases :

$$CO + H_2O \rightleftharpoons CO_2 + H_2 \quad : \quad K_1 = pCO_2 \times pH_2/(pCO \times pH_2O) \qquad (1)$$

Solid Carbon :

$$C + H_2O \rightleftharpoons CO + H_2 \quad : \quad K_2 = pCO \times pH_2 \times P/pH_2O \qquad (2)$$

$$C + 2H_2 \rightleftharpoons CH_4 \quad : \quad K_3 = pCH_4/(pH_2^2 \times P) \qquad (3)$$

No Solid Carbon :

$$CH_4 + H_2O \rightleftharpoons CO + 3H_2 \quad : \quad K_4 = pH_2^3 \times p^2/(pCO \times pH_2O) \qquad (4)$$

The equilibrium constants (K_1 - K_4) for a given temperature are calculated using polynomial expressions derived from tabulated data.

Overall Model

The equilibrium system diagram for the gasifier is shown in Fig. 4. The basic model calculates the product gas composition and the net heat output from the system for given feeds and reaction temperature; this is also extended to give an iterative method to find the products and reaction temperature that will occur for a given heat output. A number of programme versions have been written to investigate the influence of various process parameters. - Table 1.

Typical results from two areas are presented : steam/oxygen gasification, Fig. 5, and the effect of pressure variation, Fig. 6.

Other process variables which have been examined include steam temperature, system heat loss, carbon utilisation rate, CH_4 recycling and prime fuel injection.

Steam/Oxygen Gasification

Most reactors will operate at or near zero heat output (i.e. adiabatically). With steam or oxygen only, neither of the gas compositions predicted would be particularly suitable for Methanol Synthesis. Improved results can be obtained however, by combined steam/oxygen gasification and/or increased steam flows. Fig. 7 shows the effect on CH_4 content and theoretical maximum methanol yield over the range of steam and oxygen flows attainable in the rig.

Effect of Pressure

Le Chatelier's principle predicts that as the pressure is increased, CH_4, CO_2 and H_2O will be produced in preference to CO and H_2. The equilibrium analysis for an adiabatic reactor given in Fig. 5 shows that the change is most pronounced at low pressures; above about 10 bars the gas composition is virtually unaltered. This can be explained by two factors : the lower percentage increase in total pressure at higher pressures for a given absolute increase and the rise in equilibrium temperature with lower gas calorific value as more CO_2 and H_2O are produced, which tends to counteract the effect of the increasing pressure. If the same invariance with changing pressure is confirmed in practice it may be a useful simplifying factor in system optimisation studies.

General Considerations

A number of general computer investigations were undertaken to examine the effect of variation in process parameters such as H/O ratio. These studies are not yet complete, but the preliminary findings already provide valuable process insight regarding optimisation.

PROPOSED 20 t/d DEMONSTRATION PLANT

In the proposed 20 t/d facility sized and dried biomass is converted to charcoal at 500°C and essentially atmospheric pressure, by combustion gases from an inert gas generator. Liquid and gaseous pyrolysis products are cooled, the gas being passed to the inert gas generator, drier or flare and the pyroligneous liquor pumped to a slurry mixer. Product charcoal is passed to the mixer, and the resulting charcoal slurry is pumped to the entrained bed gasifier operating at 55 bar pressure. A mixture of oxygen and steam is introduced to initiate and maintain gasification at approximately 1350°C. Steam for gasification is provided by a gas-fired package boiler with superheat facilities. The product gases pass through a shift chamber/quench cooler, then into a scrubbing system where recirculated condensate is used as the coolant. Excess liquor from the scrubber is passed back to the slurry unit. The product gases from the scrubber are analysed and then combusted in the boiler and/or flare/stack

TABLE 1.

EQUILIBRIUM PROGRAMME OPTIONS

Equilibrium Regime	Equilibrium in the presense of solid carbon (Steam/Oxygen flow rates limited)		Equilibrium in the absence of solid carbon (Steam/Oxygen flow rates from solid carbon equilibrium to stoichiometric combustion).	
INPUT DATA	H/O ratio or steam only/ oxygen only Equilibrium temperature.	H/O ratio or steam only/oxygen only heat input/output.	Steam mass flow rate Oxygen mass flow rate Equilibrium temperature.	Steam mass flow rate Oxygen mass flow rate Heat input/output
RESULTS	Heat input/output Steam mass flow rate Oxygen mass flow rate	Equilibrium temperature Steam mass flow rate and/or Oxygen mass flow rate.	Heat input/output	Equilibrium temperature.

facility before discharge to atmosphere. Part of the main product gas from the demonstration plant will be sent through a methanol process route to generate small quantities of methanol for verification and analysis.

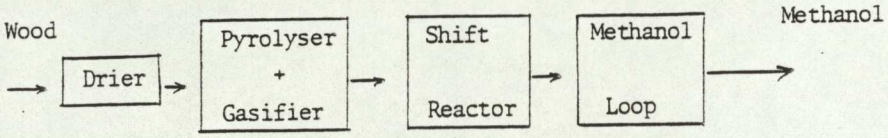

This process is described in more detail in a recent EEC Energy Publication (3).

The process flow diagram for the proposed pilot plant is shown in Fig. 8. A summary heat and mass balance is presented in Table 2.

TABLE 2 MASS AND ENTHALPY BALANCE DATA

Nature of Stream	Mass Flowrate (kg/h)	Temperature (°C)	Total Enthalpy (MJ/h)
Dried Feed (10% H_2O)	463.0	25	7685.8
Air to Inert Gas Generator	68.7	25	-
Char Product	128.2	500	4373.9
Pyrolysis Gas Export	151.3	40	324.4
Cooling Water from Scrubber	-	-	1294.4
Effluent Pryolysis Liquor	252.2	40	1308.8
Char Slurry	387.2	250	5961.9
Oxygen to Gasifier	310.0	150	36.0
Ash from Gasifier	4.6	924	4.3
Steam to Gasifier + Shift Reactor	500.0	270	1342.6
Product Syngas	1,192.6	924	7286.2

Plant Size Considerations

Based on the technical information available to FWPP through extensive analysis, it is considered that a 50% MeOH yield (weight basis - oven dried feed) is a reasonable maximum from a Biomass Gasification process, thus, a 200 t/d module would yield 100 t/d of MeOH. If one assumes a figure of 100 t/ha/y Biomass yield on an 'as received' basis, an 'energy plantation' area of 1460 ha per module (assuming 50% moisture in 'as received' material) is necessary. The Biomass yield figure is highly variable and would have a dramatic effect on processing costs - a point which has not gone unnoticed.

CONCLUSIONS

To support the widening FWPP interests in the Biomass Gasification area, theoretical gasifier models based on equilibrium considerations have been generated. The models have been shown to be appropriate for a wide range of gasifier types and a number of fundamental aspects of gasification technology have been examined using them.

Extending the equilibrium study to cover the relationship between methanol yield and the gasifier operating conditions has generated results which have been used to design a 40 kg/hr test facility and specify a meaningful experimental programme.

The findings to date have also provided an input for the design of a 20 t/d demonstration plant.

REFERENCES

1. Baron, R.E., et alia 'Chemical Equilibrium in Hydrogen/Oxygen Systems', MIT Press, London, 1976

2. Gibbens, J.R. 'General Thermodynamic Models for Gasifier Systems Based on Chemical Equilibria in a C/H/O Mixture in the Presence/Absence of Solid Carbon' (Confidential unpublished RD 695 Foster Wheeler technical notes).

3. Palz, W and Grassi G., 'Energy from Biomass' Series E, Volume 2, D. Reidel, pp. 89-100.

BIOMASS GASIFICATION PLANT

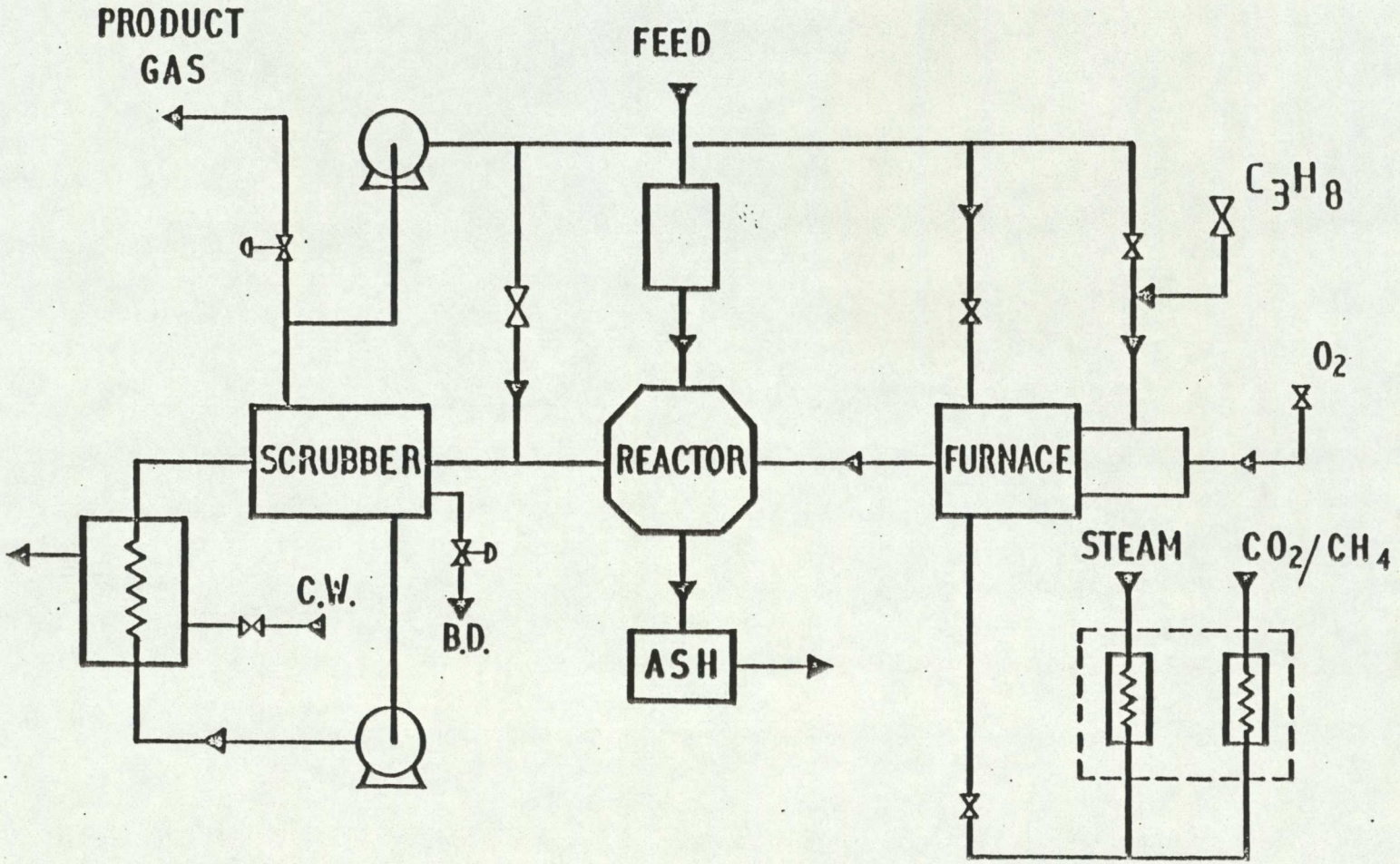

FIG. 1

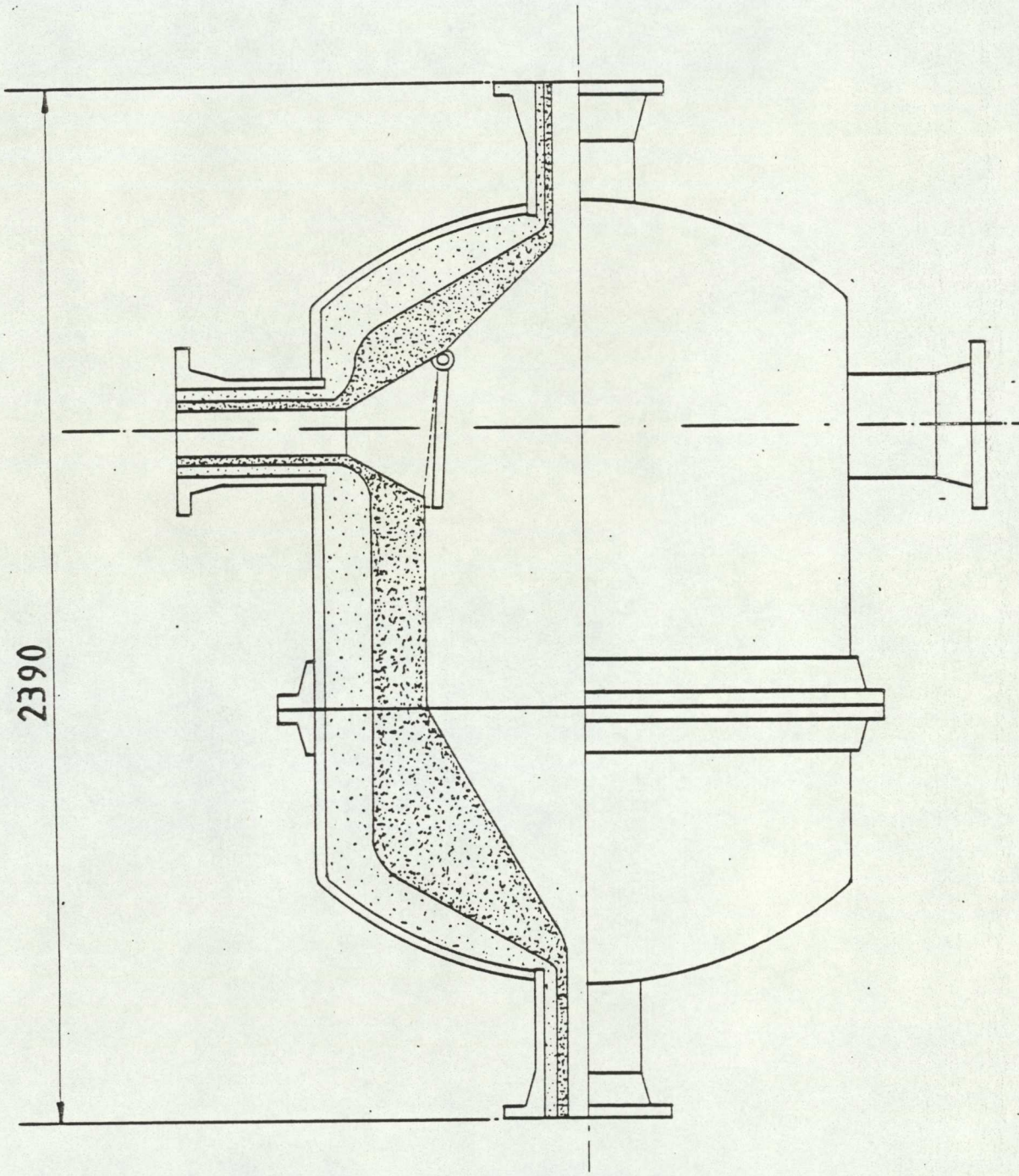

TEST RIG REACTOR VESSEL
CROSSFLOW

FIG. 2

CONCEPTUAL DESIGN OF DOWNDRAUGHT GASIFIER — OPTION 2

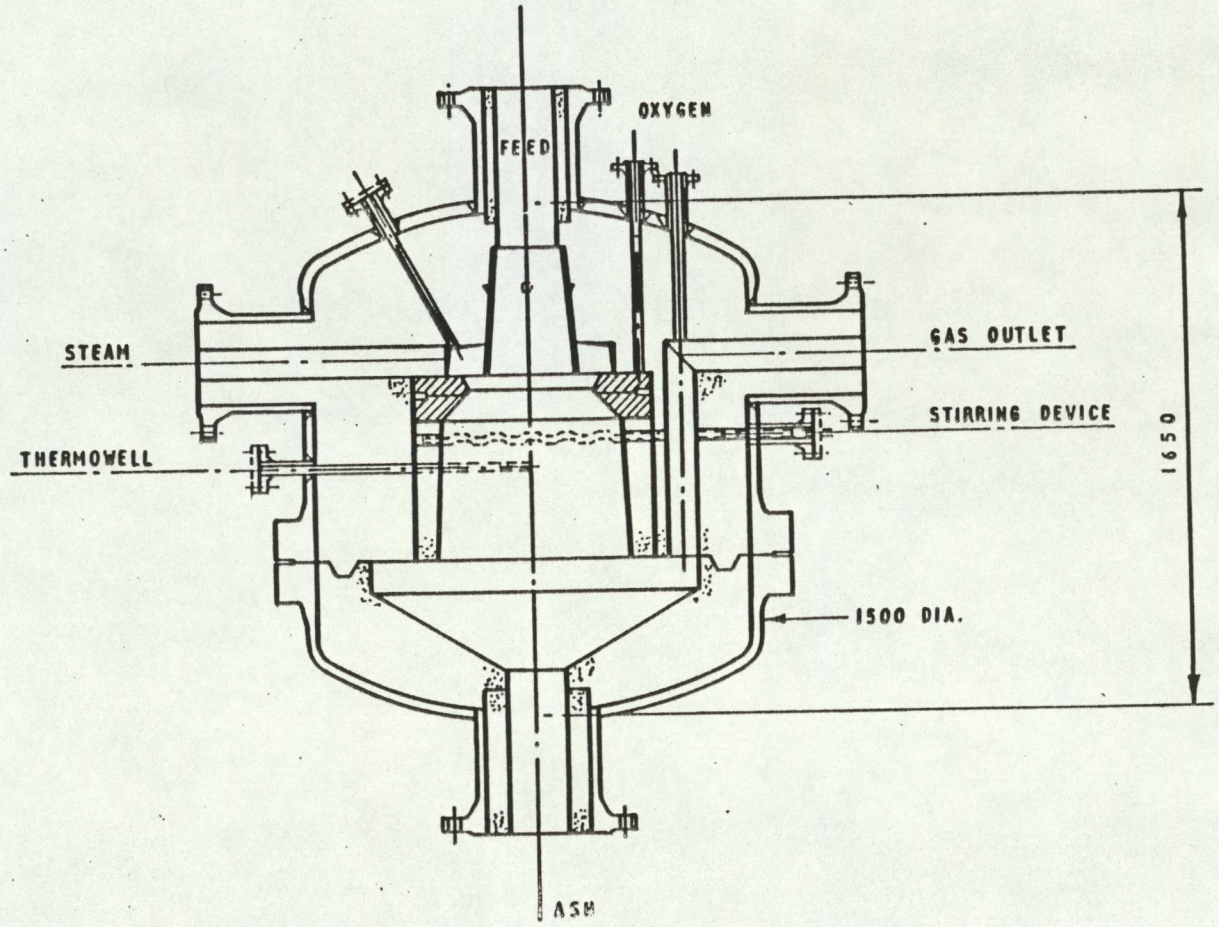

FIG. 3

MASS AND ENTHALPY STREAMS ASSUMED FOR ALL GASIFIER MODEL RESULTS

RD 695

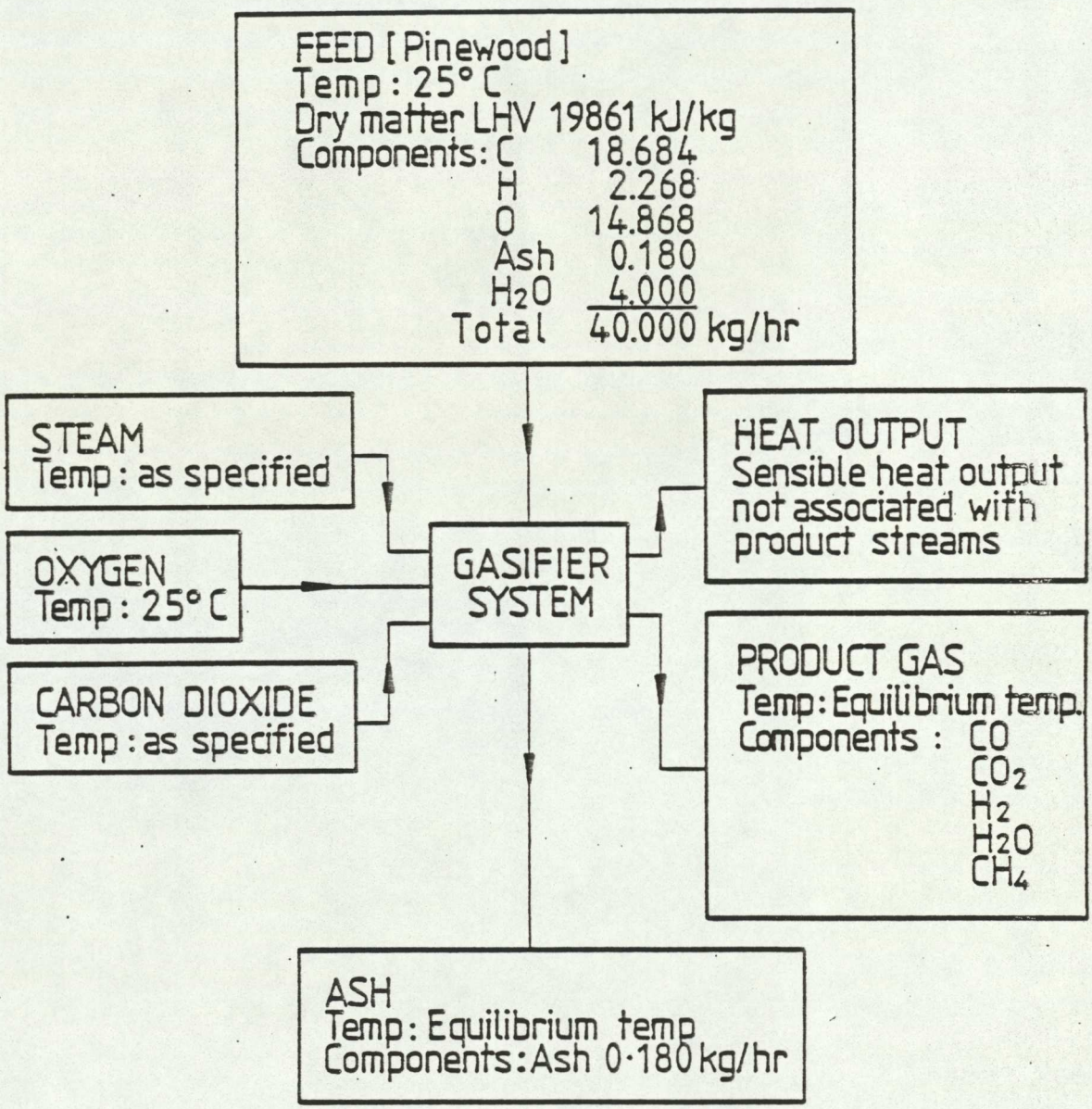

ATE 30.7.81	REV.			
RAWN BY P. Dowrall	REV.			
	REV.			

Fig. 4

F.W.P.P. Ltd RD 695

VARIATION IN GASIFIER PERFORMANCE WITH SYSTEM PRESSURE. FOR EQUILIBRIUM WITH SOLID CARBON. EQUILIBRIUM TEMP: 700°C GAS H/O RATIO: 1·7

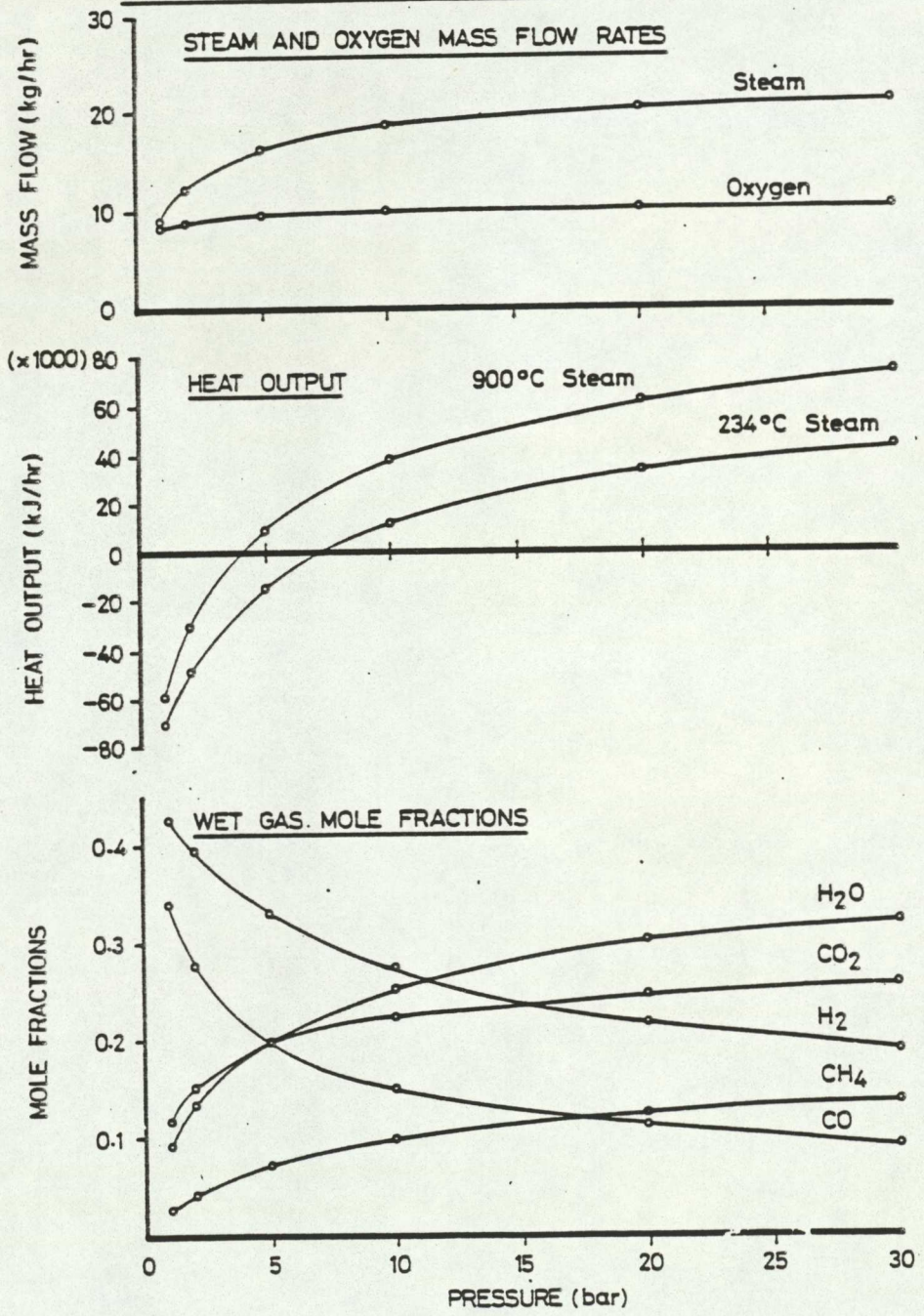

FIG. 5

F.W.P.P.Ltd RD 695 GASIFICATION WITH STEAM AND OXYGEN - EQUILIBRIUM. WITH NO SOLID CARBON

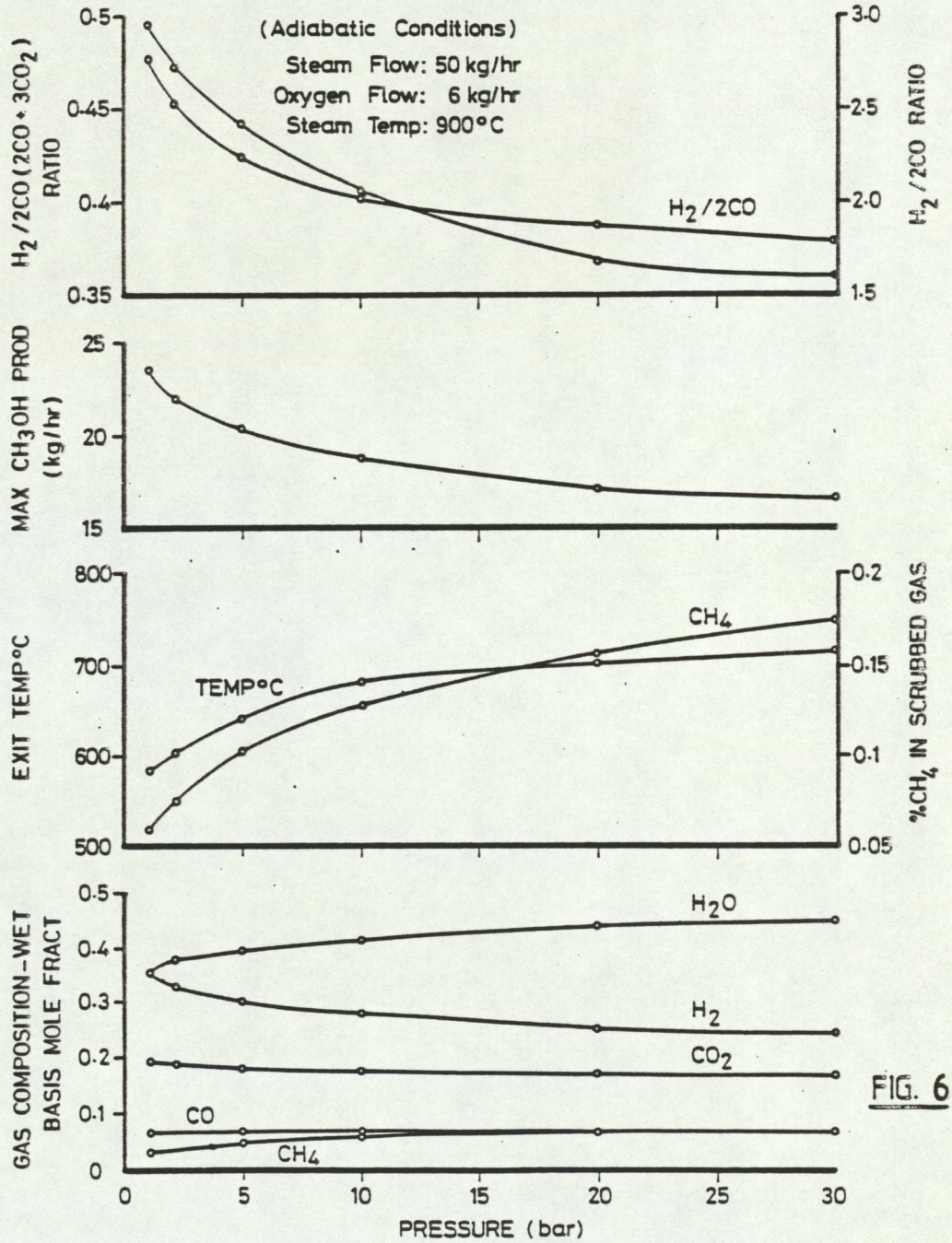

FIG. 6

RD 695

FACTORS RELATING TO THEORETICAL METHANOL PRODUCTION FOR VARIOUS STEAM AND OXYGEN FLOWRATES

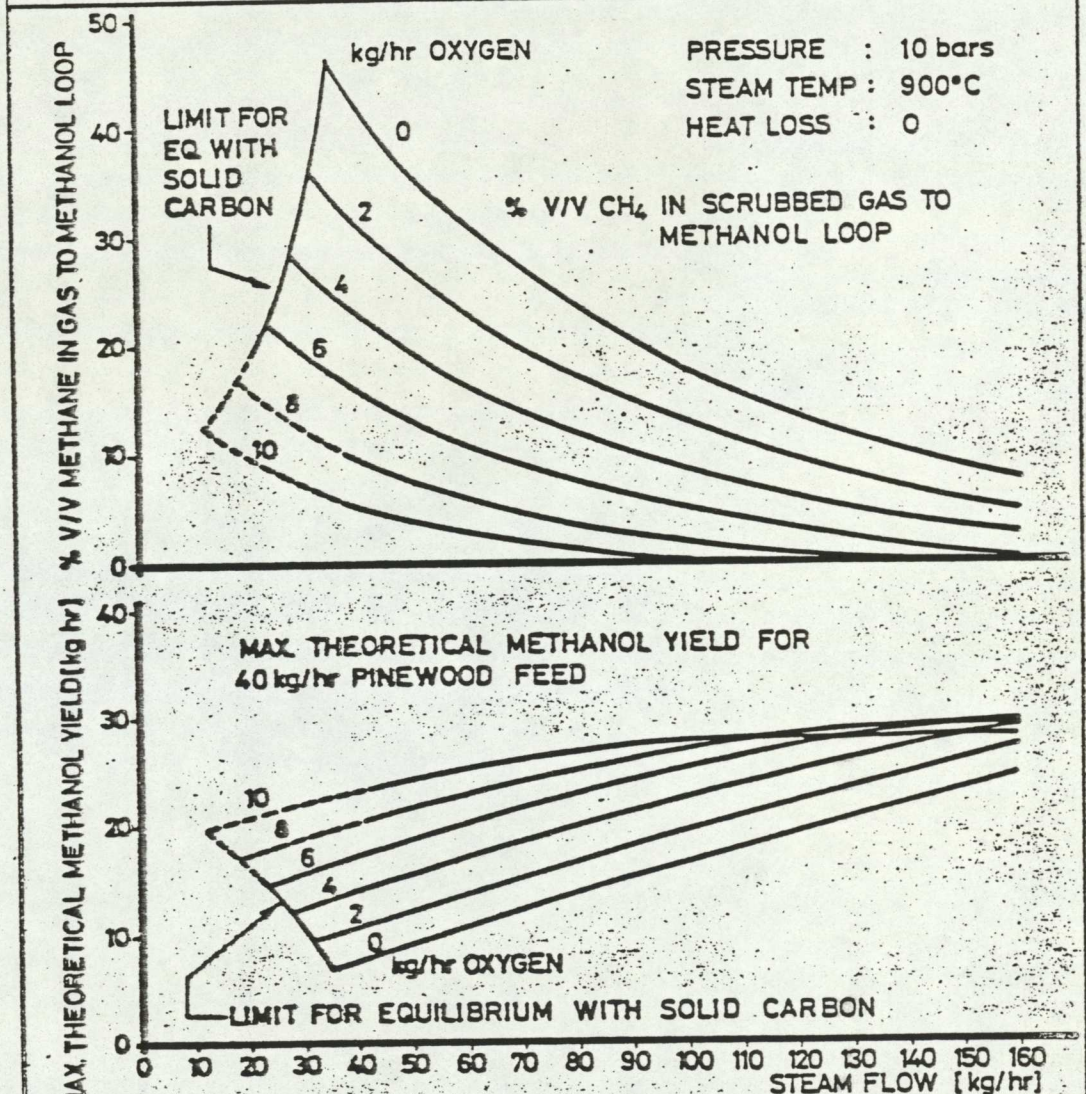

——— $H_2 / 2CO$ RATIO $\langle 1$ IN THIS REGION AND RESULTS INVALID. LINES SHOWN ONLY TO DEFINE LIMIT FOR SOLID CARBON EQUILIBRIUM.

DATE	REV.			Fig. 7
DRAWN BY R.	REV.			
APPROVED	REV.			
	REV.			

FLOWSHEET FOR 20 TONNES/DAY BIOMASS TO METHANOL PLANT

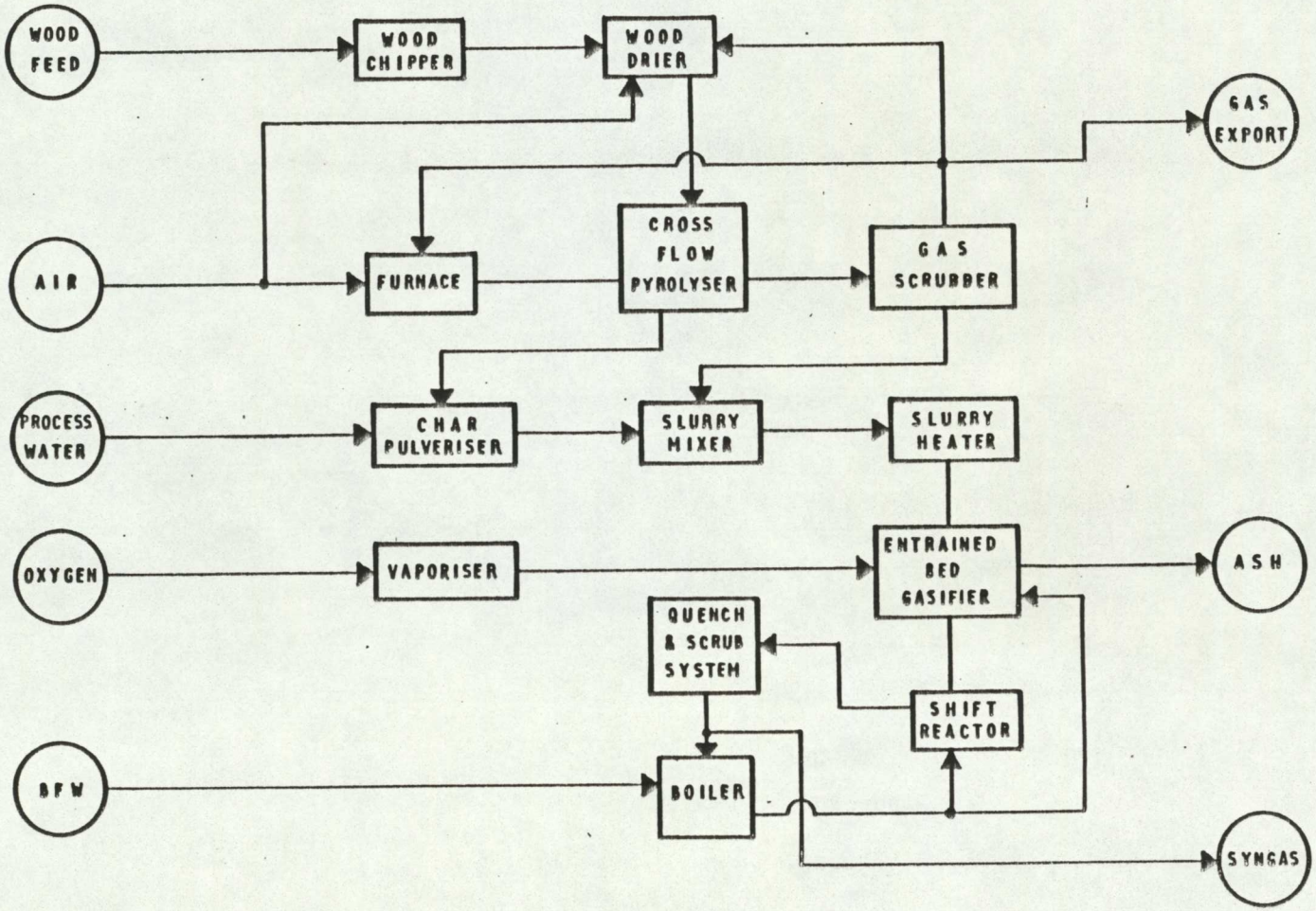

FIG. 8

PROPOSED 20 TONNES PER DAY BIOMASS GASIFICATION PILOT PLANT

Authors	:	H.T.Wilson, R.Fletcher, R.J.Davies
Contract No.	:	ESE/P/016/UK
Duration	:	24 months 1 January 1982 - 31 December 1983
Total Budget	:	£1,181,000 CEC contribution : £314,500
Head of Project	:	Mr. R.M.V.Beith, Research & Development Division
Contractor	:	Foster Wheeler Power Products Limited
Address	:	P.O. Box 160, Greater London House, Hampstead Road, London, NW1 7QN.

Summary

Sized and dried biomass is converted to charcoal at 500°C and essentially atmospheric pressure, by combustion gases from an inert gas generator. Liquid and gaseous pyrolysis products are cooled, the gas being passed to the inert gas generator, drier or flare and the pyroligneous liquor pumped to a slurry mixer. Product charcoal is passed to the mixer, and the resulting charcoal slurry is pumped to the entrained bed gasifier operating at 55 bar pressure. A mixture of oxygen and steam is introduced to initiate and maintain gasification at approximately 1350°C. Steam for gasification is provided by a gas-fired package boiler with superheat facilities. The product gases pass through a shift chamber/quench cooler, then into a scrubbing system where recirculated condensate is used as the coolant. Excess liquor from the scrubber is passed back to the slurry unit. The product gases from the scrubber are analysed and then combusted in the boiler and/or flare/stack facility before discharge to atmosphere. Part of the main product gas from the demonstration plant will be sent through a methanol process route to generate small quantities of methanol for verification and analysis.

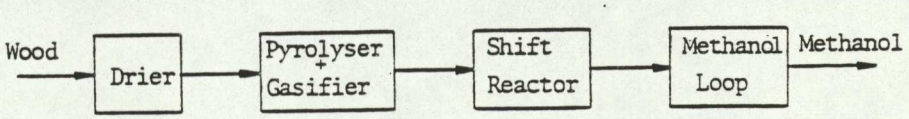

1.0 Introduction

Foster Wheeler Power Products Ltd. (FWPP) have an on-going development programme in the field of pyrolysis/gasification of agricultural, municipal and industrial waste materials. This programme incorporates the construction and operation of a 40 kg/h test facility, partly funded by the EEC. (Contract ESE 106/UK).

As the test facility is still under construction, test data is not yet available to finalise the decision on the most suitable reactor for the 20 t/d test plant now under consideration. Some information will be available early in 1982. This will be used to confirm the selected reactor design.

The present position is that a comprehensive theoretical support study has been undertaken in relation to the performance of biomass gasification systems. In particular, computerised assessments of gasifier-based thermodynamic and kinetic models have been prepared to describe the wide ranging operating conditions that could be experienced on the test facility and other similar gasification plant. The results of this work, plus mechanical design and experimental data derived from the test facility, will be available to confirm the selection of reactor type and ancillary components.

Since submitting our initial proposals to the EEC regarding construction and operation of the 40 kg/h test facility and in addition to acquired practical experience coupled with the development of thermodynamic and kinetic models, an embracing literature review has been undertaken. The results of this study have allowed a more critical systems review to be made and also preliminary selection of the 'optimum' system.

The final choice of reactor system will be guided by the above findings and the data base made available by the members of a proposed operating consortium in order to select the appropriate reactor unit and sub-systems to suit the process requirements.

The collaborators will be selected with a view to combining and providing the maximum related experience and technology into the project. It is anticipated that collaborators will include members of the Foster Wheeler group and companies whose business is plant owning and operating to balance Foster Wheeler's interest which is primarily that of plant design and management of plant supply contracts.

The proposed plant will be designed to investigate the effects on performance of a number of parameters such as feed stock type and properties, operating temperatures and pressure, quantities and relative proportions of the reacting gases, etc.

A provisional study and work schedule will be drawn up in the form of a time/work sequence analysis. A summary of this is presented in Figure 7.

2.0 Description of the Project

The anticipated layout and operation of the pilot plant is as follows:

The as-received biomass for the basic test programme, if in the form of tree trunks, is moved from local storage by means of a front end loader, on to a conveyor which transfers it to a chipper. The biomass, as wood chips, is then fed to a rotary drier which dries the feed from as-received to $< 10\%$ by weight of moisture. This drier unit can operate independently for start-up by firing natural gas (CH_4) - normally it will burn part of the pyrolysis off gas which, in the pilot plant is being directed to flare. A commercial plant would utilise this fuel gas elsewhere in order to achieve energy economy. Drier exhaust gases pass to atmosphere via a gas clean-up system.

The biomass emerging from the drier is passed to a char formation

stage via a weigh feeder. The char formation step will be based on the Cross-Flow Pyrolyser, see Figure 1. The feed passes in plug flow through the unit where its lignin structure is destroyed. Based on 463 kg/h oven-dried wood, 128 kg/h of char is produced along with 252 kg/h of pyroligneous liquor and 151 kg/h of gas. Use of a pyrolyser permits a wide range of biomass to be processed, as the system is relatively insensitive to ranges of feed sizes.

Part of the gas fraction produced in the pyrolysis step is recirculated to the inert gas generator where it is combusted to raise the recirculating gas stream temperature to about 500°C. The pyroligneous acids and residual moisture are condensed in a high efficiency venturi scrubber coupled with a heat exchanger. Product char is pulverised and mixed with the pyroligneous acid stream from the scrubber, and make-up water is added as necessary. The resulting slurry is pumped at a high pressure to a partial oxidation reactor. In this way, pyrolysis is undertaken at essentially atmospheric pressure, thus avoiding the difficulties encountered in feeding fibrous material into a high pressure gasifier environment without the escape of toxic or combustible gases. The partial oxidation step will operate at the pressures which could be used on a commercial plant where the low pressure methanol process is being employed, e.g. ICI process (50 - 100 bar).

At the partial oxidation reactor, the slurry temperature is elevated using waste heat. The slurry is injected into the reactor along with superheated steam, and oxygen taken from bulk liquid oxygen storage via a steam vaporiser. The steam is generated by firing either imported natural gas or recovered synthesis gas. For a feed of 'wet' char (quenched) plus pyroligneous liquor of 387 kg/h, approximately 310 kg/h of oxygen will be required to produce the required synthesis gas.

Product gas from the partial oxidation step passes through a refractory-lined cyclone prior to entering a shift chamber where it is contacted with saturated steam. This produces 1193 kg/h of gas having the theoretical volumetric composition : 7.5% CO, 18.7% CO_2, 16.8% H_2, 56.9% H_2O, 0.1% CH_4. This gas is quenched and cooled prior to being discharged from the system, Table 2. The intention is that part of this product gas stream (at pressure) will be passed into a small scale 'once through' methanol production process, to simulate actual methanol yield. In the pilot plant, the medium calorific value synthesis gas will either be flared, used to offset prime fuel imports to the main steam raising plant and/or used for pre-drying the feed to the char producing step of the system.

The ash product, which will contain generally $<5\%$ carbon, can be recycled to the slurry mixing unit, depending on its nature.

Ash in biomass is normally $<1\%$ thus in the partial oxidation step it will only be removed on a discontinuous basis - if necessary slag flux agents will be added.

For start-up purposes, fuel gas and/or oxygen will be fed to the partial oxidation step of the process to thermally condition the plant for process operation.

It should be noted that the proposed operation programme for the partial oxidation step will have an input based upon the results of the experimental work planned for the 40 kg/h scale unit now under construction (EEC Contract ESE 106/UK). The product gas stream leaving the system will be measured and analysed, it will also be assessed by means of a proprietary methanol loop programme available to FWPP and data from equilibrium studies which are being actively progressed.

Excess condensate removed in the scrubber, at the export point, will

be stored for recirculation as make-up liquor for the slurry stage - this feature will result in minimum pollution problems from export streams.

The process flow diagram for the proposed pilot plant is shown in Figure 2. A summary heat and mass balance is presented in Figures 3 and 4, and Table 1.

3.0 System Considerations

The proposed system exhibits a number of potential advantages which are summarised below.

1. The cross-flow pyrolyser is very flexible with regard to the nature of the feed material. A wide range of biomass feedstocks can be handled, provided the moisture content is not excessive (i.e. < 30%) and the form is suitable for efficient cross-flow reactor operation.
2. The pyrolysis step is non-polluting since the effluent streams are utilised in the process.
3. Less than one per cent of the energy in the feed is required for the additional power requirements of the pyrolysis stage, i.e. for blowers, pumps, auger, - etc.
4. The heat removed in the venturi scrubber in the pyrolysis stage is recovered in the slurry mixer; operation of the scrubber and mixer is arranged to ensure a small net import of make-up water.
5. The pyrolysis operation can be regarded as a feed preparation stage leading to the formation of char. As this is carried out at essentially atmospheric pressure, solids feeding difficulties are minimised. The final char slurry feed is subsequently pressurised to about 55 bar by means of the slurry pump. For a commercial operation, higher pressures could be employed, although the economic benefits of such a decision have not yet been quantified.
6. The Entrained Bed Gasifier operates at a high temperature (1360°C) which results in a syngas product that contains low levels of methane and residual hydrocarbons.
7. The low methane yield suggests that a methane reformer might not be required in a commercial plant.
8. Operation at high pressure leads to a small, compact and close-coupled system. Furthermore, a compression stage before the methanol loop is not required thus minimising the compression energy penalty.
9. The proposed plant is NOT energy optimised, but running costs would be offset by use of the two product gas streams, e.g. up to 40% of product gas energy could be utilised for feed drying, 20% for steam raising, etc. All product streams will be instrumented for data assessment leading to an optimised design of a commercial scale plant.
10. The plant is highly amenable to scale-up, with the pyrolysis stage being duplicated if necessary.
11. During normal operation, the pyrolyser uses its own product gas to supply the heat for char production.
12. The solid residue from the gasifier can be removed, on a batch basis, either in slag form or as ash. The quantity is small and the by-product is inert.
13. The plant's oxygen demand is reduced and reaction efficiency enhanced by the use of low grade heat in the char slurry stream.

14. An oxygen plus steam gasifying medium produces a higher quality synthesis gas, Fig. 5 (1).

15. The efficiency of the plant, based on oven-dried feed to theoretical methanol yield, translates to a mass efficiency, defined as kmol of H_2 + CO in the syngas per kilogramme of feed (20% moisture/80% dry matter) of 2.66%. The plant efficiency, i.e. enthalpy content of equivalent methanol production per unit of enthalpy input to the pilot plant, has been estimated at about 40%. Gasification efficiency, as defined below, is estimated at 95%. A limited review of the literature, and theoretical studies by FWPP, has exposed the inadequacies in quoted system efficiencies. There is an urgent need to totally define the efficiency accurately, accounting for ALL input and output streams that will be present in a commercial plant, so that any conclusions drawn from quoted figures are not distorted. This will be most important when assessing the relative merits of differing process routes.

    The following definitions have been used for the pilot plant :-

$$\text{Gasification Efficiency} = \frac{\text{Enthalpy of product syngas}}{\text{Enthalpy of feedstock}}$$

$$\text{Plant Efficiency} = \frac{\text{Enthalpy of product methanol}}{\text{Enthalpy of process feeds}}$$

A plant configuration suitable for overall optimisation, as distinct from process validation, has also been produced. A realistic evaluation of this plant's commercial feasibility, which must include anticipated capital cost and utilisation factor as well as simple conversion efficiencies, forms an essential part of FWPP's Biomass Business Development Plan.

4.0 Financial Considerations

A preliminary cost analysis for a 200 tonnes/day biomass to methanol plant is presented in Figure 6. The assessment is presented on a single 'module' basis. Depending on the level of investment, the modules could be multiplied.

To check the sensitivity of capital investment, including feed handling and civil engineering, on the annual operation costs, two cases have been considered : Case 2 capital charges are approximately twice those of Case 1.

The critical feature of the analysis is the payback period which relates the methanol sales revenue to the net annual operating costs. It may be noted that the payback periods are 7.5 and 12.5 years respectively for the two cases under review, and therefore plants of this size may be only marginally economical at the present time.

A key to project viability is the methanol credit figure, though this is obviously a simplification : for strategic purposes, a particular Government may subsidise the project, either by reducing feed charges or fixing the selling price of the methanol. Increases in methanol credit would significantly reduce the payback period for a commercial plant.

5.0 References

1. " General thermodynamic models for gasifier systems based on chemical equilibria in a C/H/O mixture in the presence/absence of solid carbon" J. R. Gibbins.
(Confidential unpublished Foster Wheeler technical notes).

TABLE 1

Mass and Enthalpy Balance Data

Nature of Stream	Mass Flowrate (kg/h)	Temperature (°C)	Total Enthalpy (MJ/h)
Dried Feed (10% H_2O)	463.0	25	7685.8
Air to Inert Gas Generator	68.7	25	-
Char Product	128.2	500	4373.9
Pyrolysis Gas Export	151.3	40	324.4
Cooling Water from Scrubber	-	-	1294.4
Effluent Pyrolysis Liquor	252.2	40	1308.8
Char Slurry	387.2	250	5961.9
Oxygen to Gasifier	310.0	150	36.0
Ash from Gasifier	4.6	924	4.3
Steam to Gasifier + Shift Reactor	500.0	270	1342.6
Product Syngas	1,192.6	924	7286.2

TABLE. 2 TYPICAL GAS ANALYSES

WET PRODUCT GAS (SHIFTED)

TEMPERATURE = 924°C
PRESSURE = 55 BAR
COMPOSITION (% VOL): –

H_2	16.9
CO	7.5
CO_2	18.7
CH_4	0.08
H_2O	56.9

SCRUBBED GAS

PRESSURE = 55 BAR
COMPOSITION (% VOL): –

H_2	67.3
CO	29.9
CO_2	2.5
CH_4	0.5

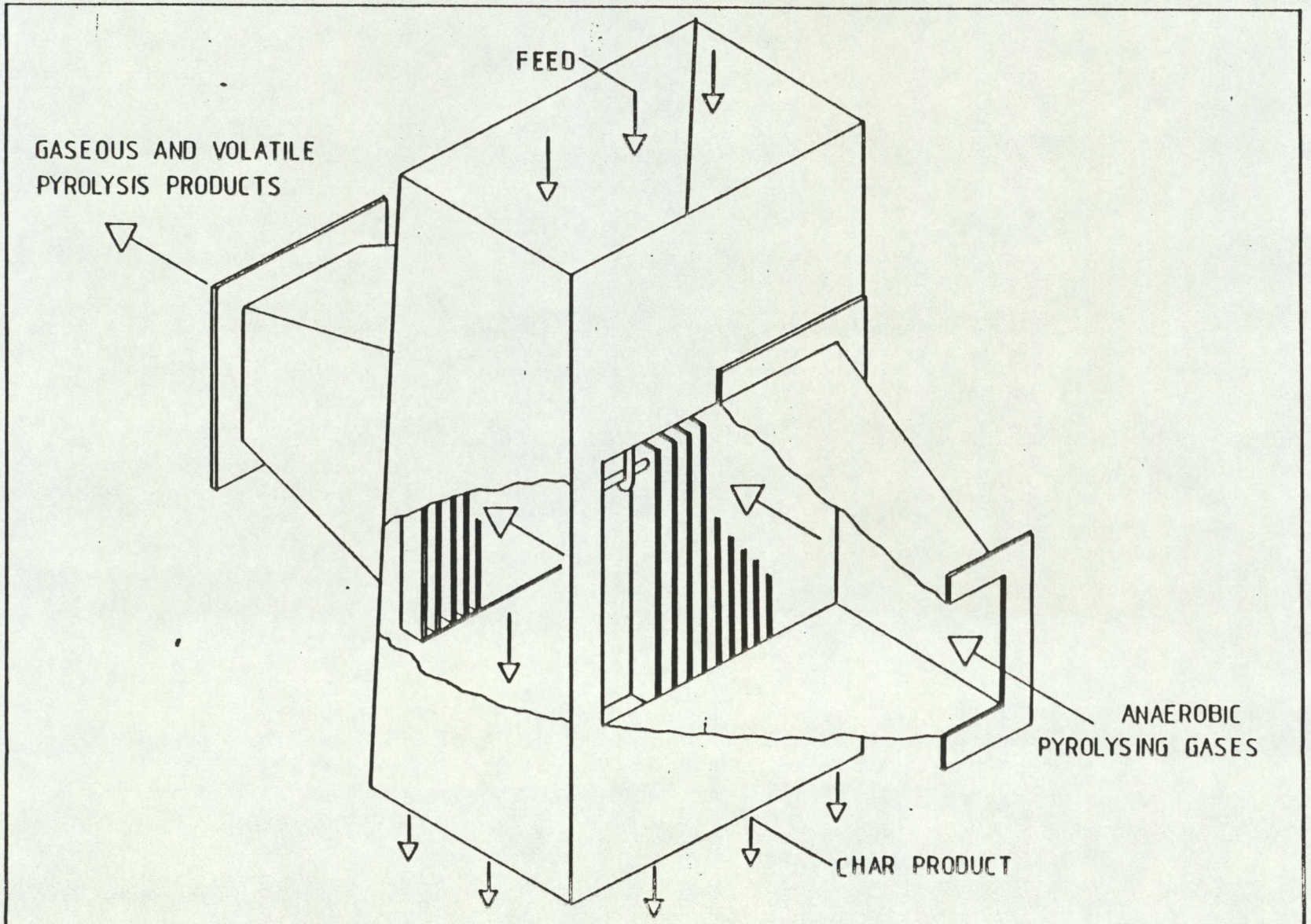

SCHEMATIC CROSS-FLOW PYROLYSIS REACTOR LAYOUT. FIG. 1

FLOWSHEET FOR 20 TONNES/DAY BIOMASS TO METHANOL PLANT

FIG. 2

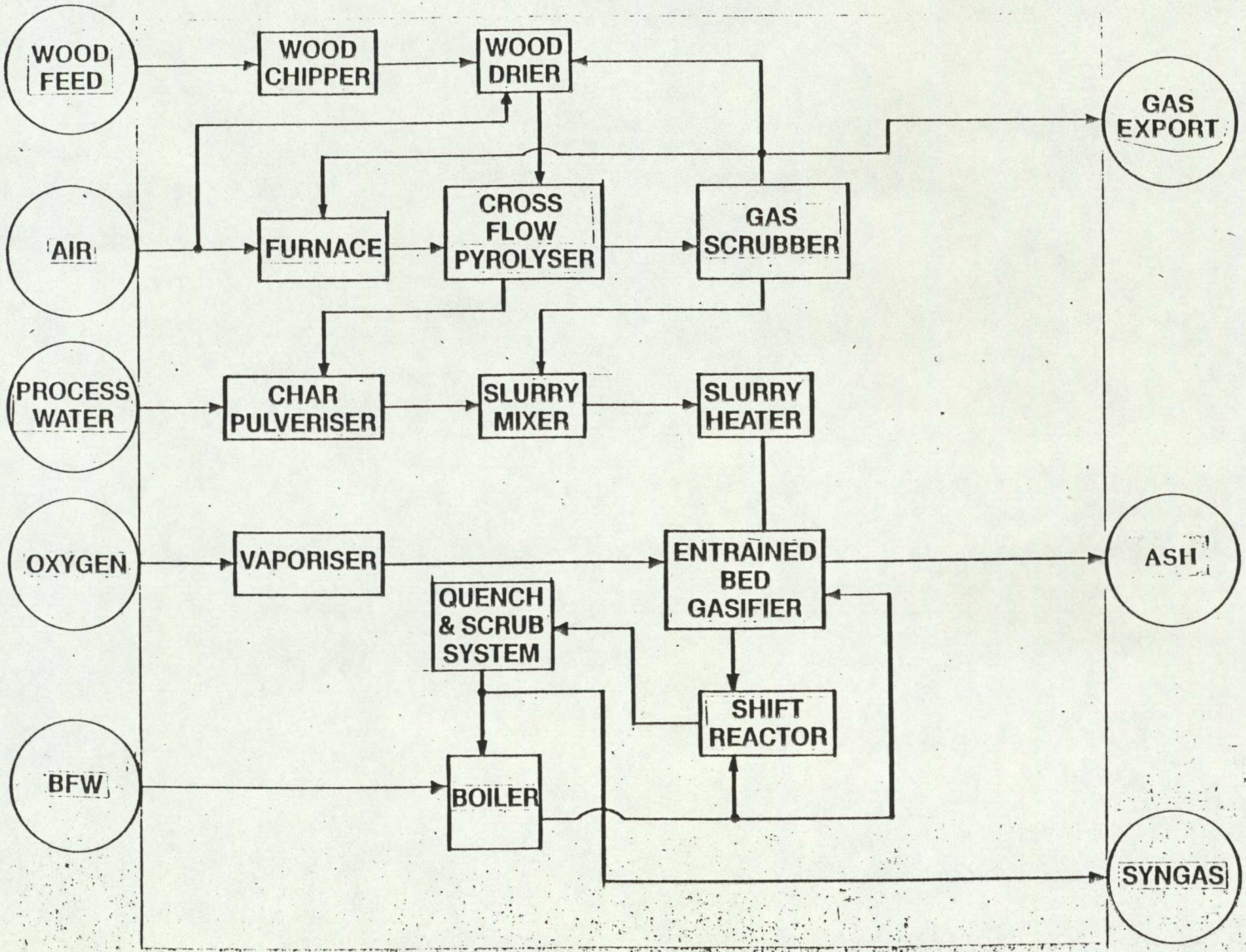

MASS BALANCE FOR 20 t/d BIOMASS TO METHANOL PLANT

FIG. 1

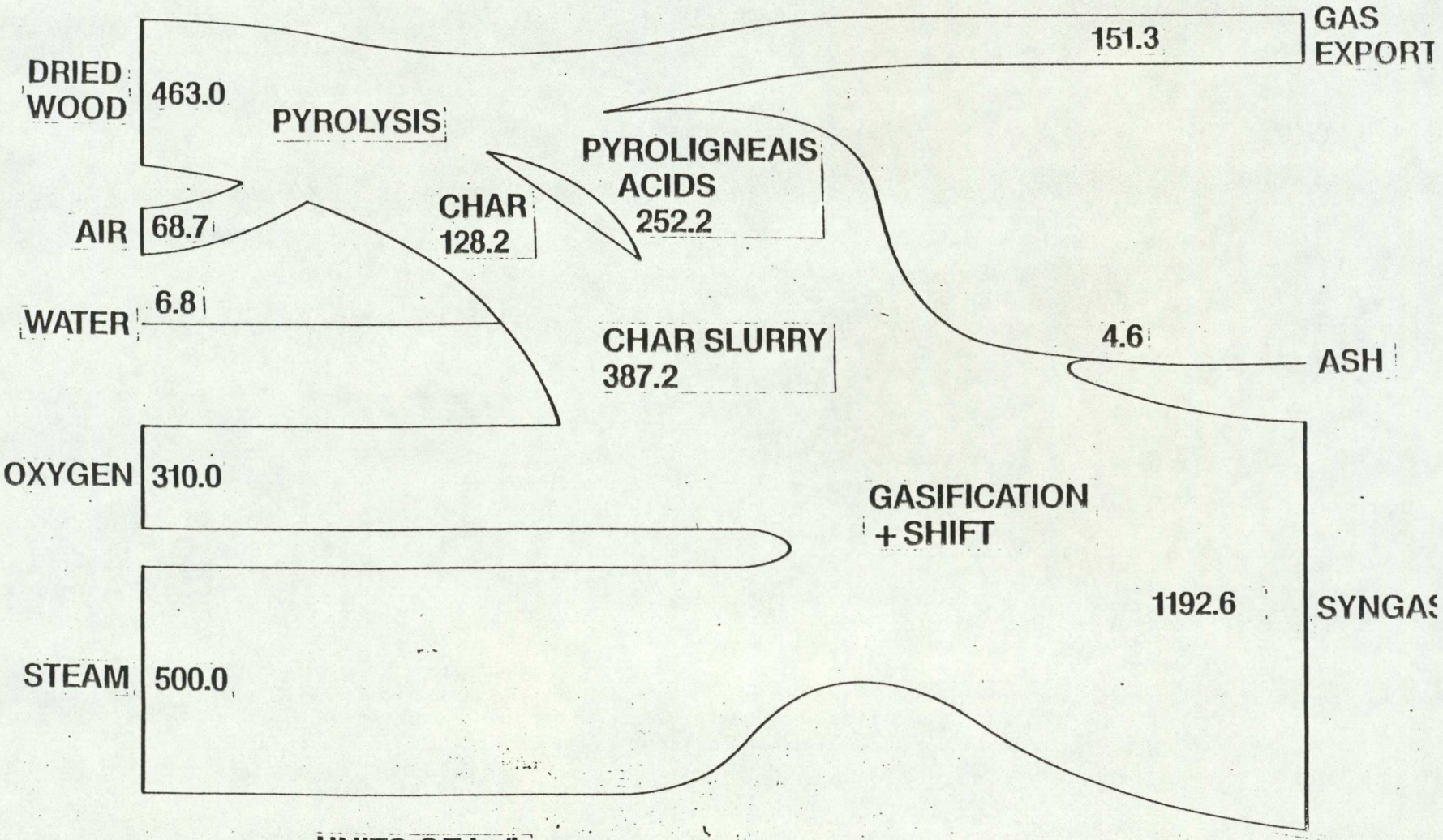

FIG.

HEAT BALANCE FOR 20 t/d BIOMASS TO METHANOL PLANT

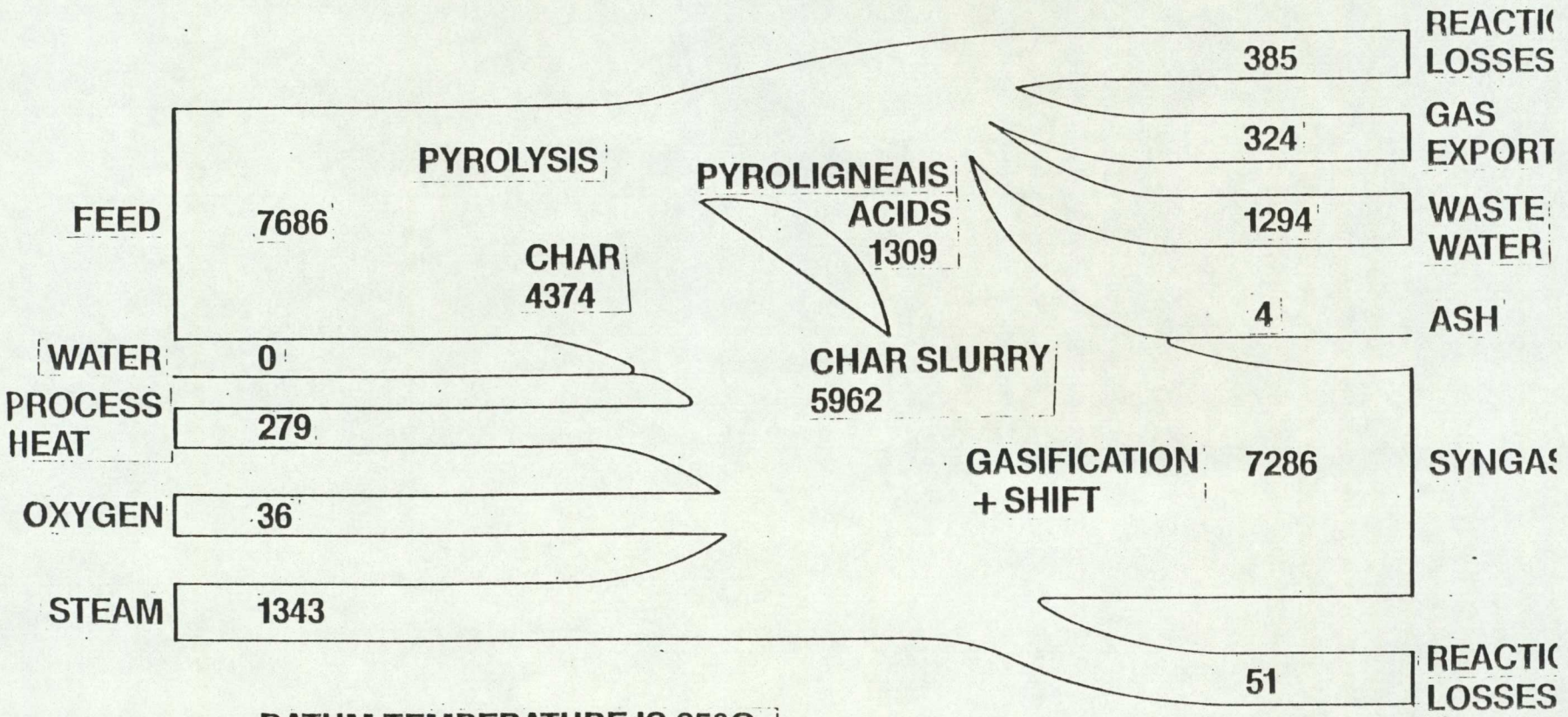

DATUM TEMPERATURE IS 25°C
UNITS OF MJ/h

FIG.5.

TRENDS RELATING TO THEORETICAL METHANOL PRODUCTION FOR VARIOUS STEAM AND OXYGEN FLOWRATES

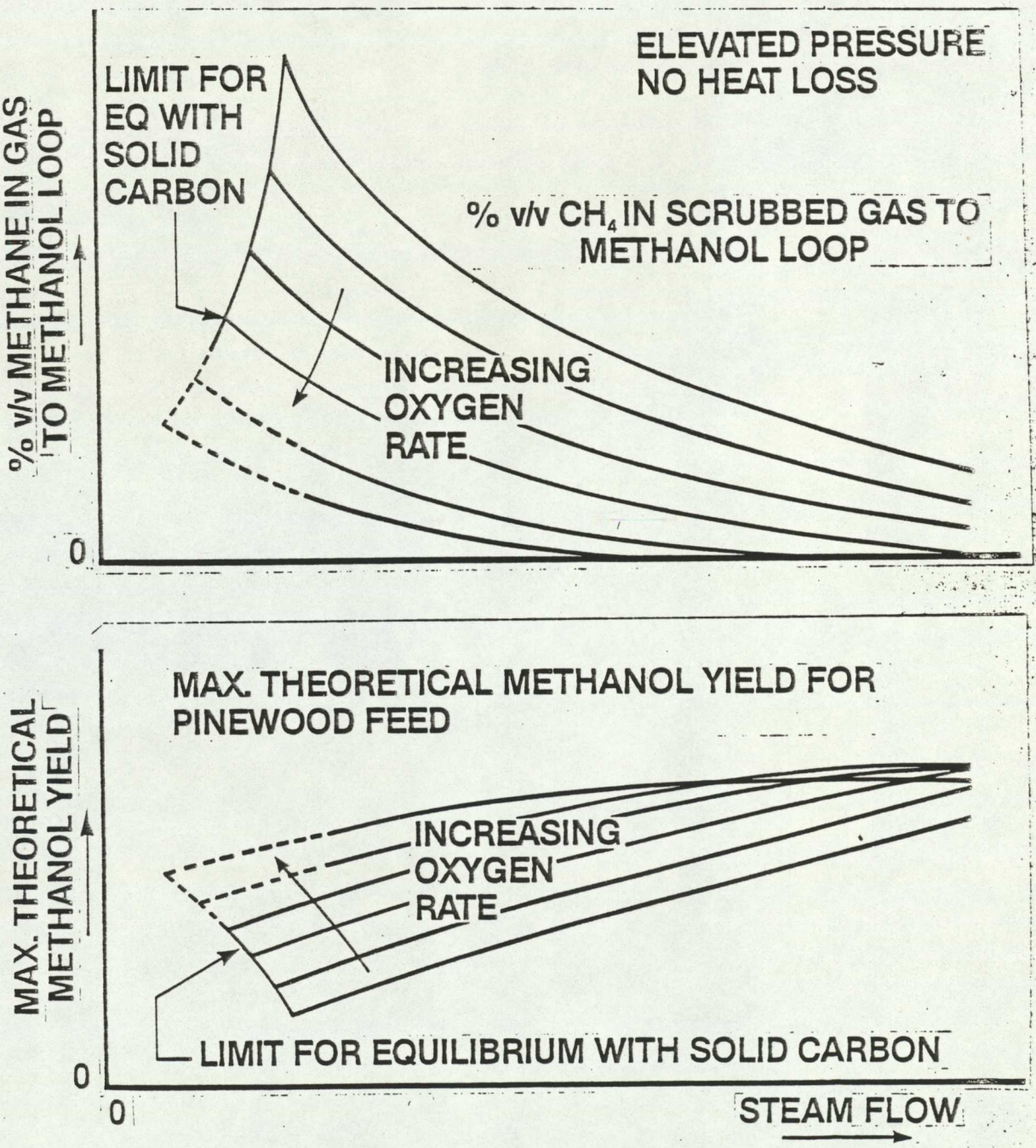

---- H_2 / 2CO RATIO <1 IN THIS REGION AND RESULTS INVALID. LINES SHOWN ONLY TO DEFINE LIMIT FOR SOLID CARBON EQUILIBRIUM

FIG. 6.

COST DATA FOR 200 t/d BIOMASS TO METHANOL PLANT

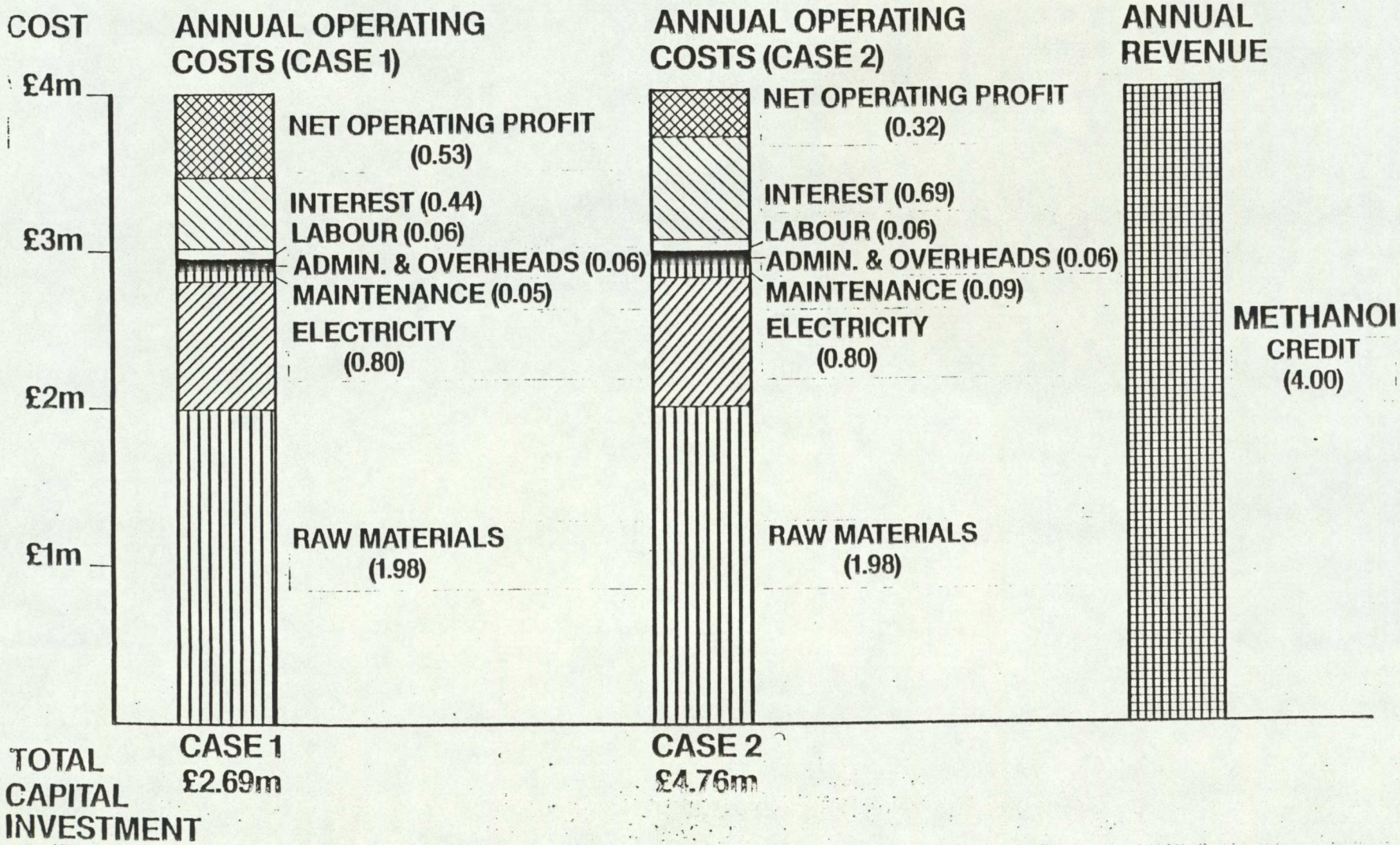

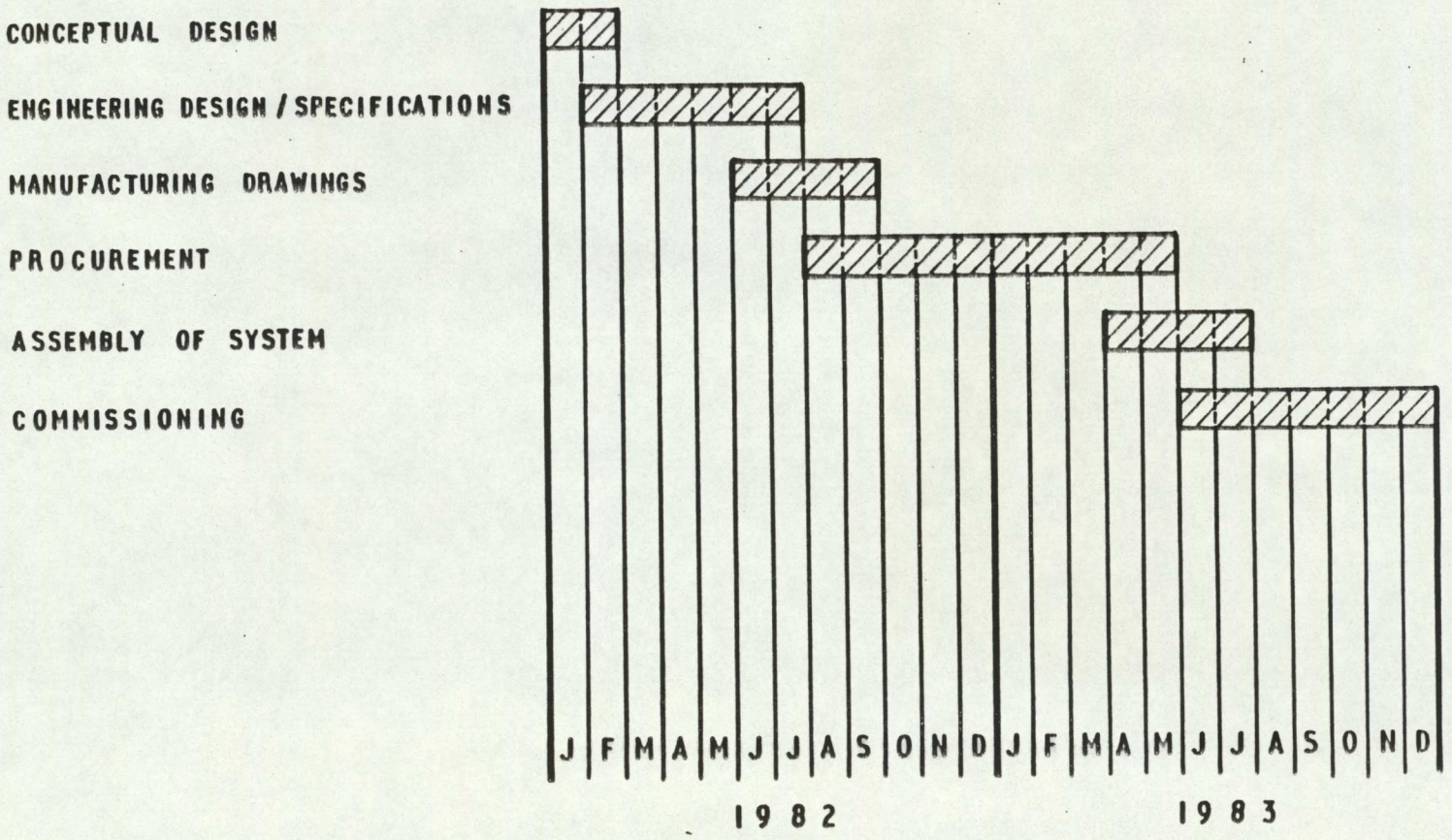

F.W.P.P. LONDON.

PROJECT TIMETABLE

FIG. 7

APPENDIX 4.1

Biomass Feed Analysis

FOSTER WHEELER POWER PRODUCTS LTD.

COMPANY LABORATORY

FUEL ANALYSIS

LABORATORY REPORT NO. 2.258 PAGE No. 1 of 1

SAMPLE DESCRIPTION. WOOD CHIPPINGS FOR BIOMASS

CONTRACT NO. 8-86-04801 DATE. 1.5.81.

FREE MOISTURE % - INHERENT MOISTURE % -

TOTAL MOISTURE % 49.3

	AS REC'D	DRY
FIXED CARBON	-	-
VOL. MATTER	-	-
ASH	0.45	0.89
MOISTURE	49.3	-
TOTAL		
CARBON DIOXIDE	-	-
CARBON	-	-
HYDROGEN	-	-
OXYGEN	-	-
NITROGEN	-	-
SULPHUR	0.38	0.75
ASH	0.45	0.89
MOISTURE	49.3	-
TOTAL		
GCV kJ/kg	10.030	19552
cals/gm	2396	4670
Btu/lb	4312	8406
Chloride	-	-

REACTIVITY INDEX (T15) °C -

HARDGROVE INDEX -

ABRASIVE INDEX -

FRIABILITY INDEX -

ASH FUSION TEMP.

	RED.	OXID
INITIAL DEFORM °C	1340 °C. *	/
SOFT TEMP. SPH °C		
SOFT TEMP. HEM °C		
FLUID TEMP °C		

SIZING:

* Did not exhibit usual coal ash deformation characteristics but melted suddenly at 1340°C

APPENDIX 5.1

Main Reactor Design Calculation Check

GLOSSARY

UTS	Ultimate Tensile Strength
PS	Proof Stress
RT	Room Temperature
ID	Internal Diameter
S	Allowable Stress
E	Young´s Modulus
P	Design Pressure
t	Thickness
t_{min}	Minimum Thickness
t_{act}	Actual Thickness
A	Cross Section Area
S_g	Gasket Bearing Stress
d	Diameter
F	Joint Efficiency Factor
NB	Nominal Bore
XX	Extra/Extra Strong
M	Code Factor
NDE	Non Destructive Examination
R	Radius
m	Meter
MN	Mega Newton
in	Inch
mm	Millimetre

1.0 Introduction

These reactor vessel check calculations are based on nominal sizes given on the vendor manufacturing drawings following design undertaken in accordance with ASME VIII Div I (Figure 5.4 and Figure 5.5). At the time the drawings were reviewed (prior to manufacture of the vessel), it was decided that the 14 in NB 300 lb W.N.R.F. flange would be 'set-on' and the lower head adjacent to the 16 in flange was thinned locally from 45 mm to 38 mm. A corrosion allowance of 2 mm was used as per in-house calculations. No external loadings were considered. All references quoted relate to ASME VIII Div I

The conclusion of the design check was that the vessel had been designed generally in accordance with ASME VIII Div I

2.0 Design Calculations

2.1.1 Material Properties

BS 1501 - 224 (32B) [Addendum 4 - 1973]

0.2% PS = 190 MN/m^2 at 300 C
0.2% PS = 305 MN/m^2 at RT
UTS = 460 MN/m^2 at RT

From UA 500 Allowable Stress is 1/4 UTS or 2/3 PS (whichever is least)
Therefore allowable Stress = 115 MN/m^2 (UTS)

BS 1503 - 224 (32B) [BS 1503 - 1969]

0.2% PS = 19.7 Kgf/mm^2 at 300 C
0.2% PS = 26.8 Kgf/mm^2 at RT
UTS = 50.4 Kgf/mm^2 at RT

Therefore allowable stress = 123 MN/m^2 (UTS)

SA 106 GRB [UCS 23]

Allowable Stress = 103.4 MN/m^2 (up to 600 F)

SA 193 B7 [UCS 23]

Allowable Stress = 172.4 MN/m^2 (up to 600 F for less than or equal to 63 mm)

2.1.2 Minimum Thicknesses

Strake

Corrosion allowance = 2 mm
ID = 1446 mm
R = {(1446/2) + 2} = 725 mm

$S = 115\ MN/m^2$

$E = 1$

$P = (32 \times 10^5/10^6)$

$= 3.2\ MN/m^2$

$t_{min} = \frac{PR}{SE - 0.6P}$ [UG 27 (C) - (1)]

$t = \frac{3.2 \times 0.725}{\{(115 \times 1) - (0.6 \times 3.2)\}}$

$t_{min} = \underline{20.52\ mm}$

$t_{act} = \underline{35\ mm}$ (33 Corrected)

Torispherical Heads

ID = 1446 mm

Crown Radius = 1448 mm

Knuckle Radius = 89 mm

Corrosion Allowance = 2 mm

$S = 115\ MN/m^2$

$E = 1$

$P = 3.2\ MN/m^2$

$t = \frac{0.885\ PL}{SE - 0.1\ P}$ [UG 32 (e)]

$t = \frac{(0.885 \times 3.2 \times 1.450)}{(115 - [0.1 \times 3.2])}$

$t = \underline{0.03581m = 35.81\ mm}$

$t_{act} = \underline{45\ mm}$ (43 corrected)

Flange Connections

12 in NB SCH 120 Material A106 GRB

OD	t	ID
12.75 in (323.85mm)	1.0 in (25.4 mm)	10.75 in (273.05 mm)
	23.4 mm (Corrected)	277.05 mm (Corrected)

$$t = \frac{PR}{SE - 0.6P}$$

$$t = \frac{(3.2 \times 277.05 \times 0.5)}{(103.4 - [0.6 \times 3.2])}$$

$$t = 4.368 \text{ mm}$$

t_{act} = 23.4mm (Corrected)

14 in NB SCH 140 Material A106 GRB

OD	t	ID
14.0 in (355.6 mm)	1.25 in (31.75 mm)	11.5 in (292.1 mm)
	29.75 mm (Corrected)	296.1 mm (Corrected)

$$t = \frac{(3.2 \times 296.1 \times 0.5)}{[103.4 - [0.6 \times 3.2])}$$

$$t = 4.67 \text{ mm}$$

t_{act} = 29.75 mm Corrected

16 in NB SCH 100 Material A106 GRB

OD	t	ID
16.0 in (406.4 mm)	1.031 in (26.19 mm)	13.938 in (354.02 mm)
	24.19 mm (Corrected)	358.02 mm (Corrected)

$t = \frac{(3.2 \times 358.02 \times 0.5)}{(103.4 - [0.6 \times 3.2])}$

$t = 5.645$ mm

$t_{act} = 24.19$ mm (Corrected)

Weld Neck Flanges

Design temperature 300 C (572 F) at 464.1 lbf/in^2
For BS 1503 - 224 - (32B) Material Type
From USAS B16.5 Maximum Pressure Rating of 300 lbf Flange
= 555 lbf/in^2. Therefore Adequate.

1.5 in NB - XX Strong

OD	t	ID
1.9 in	0.4 in	1.1 in
48.26 mm	10.16 mm	27.94 mm
	(8.16 mm)	(31.94 mm)
	(Corrected)	(Corrected)

$t = \frac{(3.2 \times 3194 \times 0.5)}{(103.4 - [0.6 \times 3.2])}$

$t = 0.504$ mm

$t_{act} = 8.16$ mm (Corrected)

Torispherical Head - Spherical Portion

Crown Radius (Corrected) = 1450 mm [UA4 (d)]

$E = 1$

$M = 1$

$t = \frac{PL}{2S - 0.2P}$

$t = \frac{(3.2 \times 1.45)}{([2 \times 115] - [0.2 \times 3.2])}$

$t = 0.02023$ m = 20.23 mm

$t_{act} = 43$ mm (Corrected)

Thermo Pocket - 0.5" NB SCH 160

OD	t	ID
0.84 in	0.188 in	0.464 in
21.34 mm	4.78 mm	11.78 mm
	(2.78 mm)	(15.78 mm)
	(Corrected)	(Corrected)

$$t = \frac{(3.2 \times 15.78 \times 0.5)}{(103.4 - [0.6 \times 3.2])}$$

$$t = 0.249 \text{ mm}$$

t_{act} = 2.78 mm (Corrected)

2.1.3 Main Flange Bolting

36 Off 1.75 in UN-8-2A Stud Bolts

Min bolt diaameter = 1.5943 in

Total cross sectional area $A_b = 71.867 \text{ in}^2$

$A_b = 0.046365 \text{ m}^2$

Check gasket unit bearing stress Sg:

$$Sg = \frac{A_b \, Sa}{0.785 \, [(d_0 - 0.125)^2 - (d_1)^2]}$$

$$Sg = \frac{(71.867 \times 25004.5)}{0.785 \, [(62.72 - 0.125)^2 - (61.063)^2]}$$

$$Sg = 12083.6 \text{ lbf/in}^2$$

Within the range 10 - 25000 lbf in^2

(Flexitalic Recommended)

2.1.4 Reinforcement Requirements

Shell Strake - 12" NB SCH 120

t = 33 mm t_r = 20.52 mm (UG 40)

d = 277.05 mm t_n = 23.40 mm

t_{rn} = 4.368 mm
E = 1
F = 1

A_1 Larger of: (33 - 20.52) 277.05 = 3457.6 mm^2
or 2(33 - 20.52)(33 + 234) = 1407.7 mm^2
A_1 = 3457.6 mm^2

A_2 Smaller of: (23.4 - 4.368) 5 x 33 = 3140.3 mm^2
or(23.4 - 4.368)(5 x 23.4 + 2.0)= 2226.7 mm^2
A_2 = 2226.74mm^2
A_3 = 2(23.4 - 2) 50 = 2140 mm^2
A_{weld} = $\{(31)^2 + (29)^2\}$ = 1802 mm^2
Area Required = 277.05 x 20.52
= 5685.07 mm^2
Area Available = 3457.6+(103.4/115)(2226.74+2140 + 1802)
= 9004.1 mm^2 .Therefore Adequate.

Reinforcement - Head 14 in NB SCH 140

t = 43 mm t_r = 20.23 mm (Spherical Thickness)
d = 296.1 mm t_n = 29.75 mm
t_{rn} = 4.67 mm
E = 1
F = 1

A_1 Larger of: (43-20.23) 296.1 = 6742.19 mm^2
or 2(43-20.23)(43 + 29.75) = 3313.00 mm^2

A_2 Smaller of: (29.75 - 4.67) 5 x 43 = 5392.20 mm^2
or (29.75-4.67)5x29.75 = 3730.65 mm^2

$A_{weld} = (32)^2$

$= 1024\ mm^2$

Area required= 296.1 x 20.23

$= 5990.1\ mm^2$

Area available = 6742.19 + (1034/115)(3730.65 + 1024)

$= 11022.2\ mm^2$

Therefore Reinforcement adequate.

(nozzle calculated as a "set-on" nozzle)

Reinforcement - Head - 16 in NB SCH 100

t = 36 mm t_r = 20.23 mm

(t = 38 + correction as head is locally thinned via nozzle)

d = 358.02 mm t_n = 24.19 mm

t_{rn} = 5.645 mm E = 1 F = 1

A_1 Larger of (36 - 20.23) 358.1 $= 5647.24\ mm^2$

2(36 - 20.23)(36 + 24.19) $= 1898.40\ mm^2$

A_2 Smaller of (24.19 - 5.645) 5 x 36 $= 3338.10\ mm^2$

(24.19 - 5.645) 5 x 24.19 $= 2243.00\ mm^2$

$A_3 = 2(24.19 - 2)\ 50 = 2219\ mm^2$

$A_{weld} = (30)^2 + (28)^2 = 1684\ mm^2$

Area required = 358.02 x 20.23 = $7242.74\ mm^2$

Area available = 5647.24 + 103.4/115(2243 + 2219 + 1684)

$= 11173.3\ mm^2$

Therefore Reinforcement adequate.

Reinforcement - Head - 1.5 in NB XX Strong

t = 43 mm t_r = 35.81 mm

d = 31.94 mm t_n = 8.16 mm t_{rn} = 0.504 mm E = 1 F = 1

A_1 Larger of: (43 - 35.81) 31.94 $= 229.65\ mm^2$

or $2(43 - 35.81)(43 + 8.16) = 735.68\ mm^2$

A_2 Smaller of $(8.16 - 0.504)\ 5 \times 43 = 1646.0\ mm^2$

or $(8.16 - 0.504)\ 5 \times 8.16 = 312.4\ mm^2$

$A_{weld} = (12)^2 = 144\ mm^2$

Area required $= 3194 \times 35.81$

$= 1143.77\ mm^2$

Area available $= 735.68 + 103.4/115\ (312.4 + 144)$

$= 1146.0\ mm^2$

Therefore Reinforcement Adequate.

Reinforcement - 12 in NB SCH 120 Pipe - 1.5 in NB XX Strong

$t = 23.4$ mm $t_r = 4.368$ mm

$d = 31.94$ mm $t_n = 8.16$ mm $t_{rn} = 0.504$ mm

$E = 1$ $F = 1$

A_1 Larger of: $(23.4 - 4.368)\ 31.94 = 607.9\ mm^2$

or $2(23.4 - 4.368)(23.4 + 8.16 = 1201.3\ mm^2$

A_2 Smaller of: $(8.16 - 0.504)\ 5 \times 23.4 = 895.8\ mm^2$

or $(8.16 - 0.504)\ 5 \times 8.16 = 312.4\ mm^2$

A_{weld} - Size not specified

Area required $= (31.94 \times 4.368)$

$= 139.5\ mm^2$

Area available $= \{1201.3 + (103.4/115)(312.4)\}$

$= 1482.2\ mm^2$

Therefore Reinforcement Adequate.

Reinforcement - Shell Strake - Thermo Pocket

$t = 33$ mm $t_r = 20.52$ mm $E = 1$ $F = 1$

$d = 15.78$ mm $t_n = 2.78$ mm $t_{rn} = 0.249$ mm

A_1 Larger of: = (33 - 20.52) 15.78 = 196.90 mm^2

or 2(33 - 20.52)(33 + 2.78)= 893.10 mm^2

A_2 Smaller of: = (2.78 - 0.249) 5 x 33 = 499.80 mm^2

or (2.78 - 0.249)(5 x 2.78)= 42.10 mm^2

A_3 = 2(2.78 - 2) 2.5 x 2.78 = 10.84 mm^2

A_4 = $[(6)^2 + (6)^2]$ = 72.00 mm^2

Area required = (15.78 x 20.52) = 323.80 mm^2

Area available = [893.1 + 103.4/115(42.10 + 10.84 + 72)]

= 1005.30 mm^2

Therefore reinforcement adequate.

APPENDIX 5.2

Integral Hub Flange Rating

JOB NUMBER: 8.86.04801 INTEGRAL HUB FLANGE RATING

◆◆ RATING FOR STRESS CALCULATIONS ◆◆

FLANGE R VALUE LESS THAN MINIMUM R FLANGE E VALUE LESS THAN MINIMUN E

FLANGE R VALUE = 2.2045
MINIMUM R VALUE = 2.2500
FLANGE E VALUE LESS THAN MINIMUN E GASKET WIDTH INADEQUATE@@@]CD^[-H(+

FLANGE E VALUE = 1.7320
MINIMUM E VALUE = 1.7500

◆◆ IMPERIAL UNITS ◆◆

◆◆ RATING CONDITIONS ◆◆

RATING PRESSURE = 464.1
VESSEL THICKNESS = 1.3000
CORROSION ALLOWANCE = 0.
OPERATING BOLT STRESS = 25005.
AMBIENT BOLT STRESS = 25005.

◆◆ GASKET & BOLTING CALCS ◆◆

FACING TYPE 1A COLUMN NUMBER 1

N	= .8270	LT Y	= 20000.
LT B	= .3215	LT M	= 6.000
G	= 62.0740		
WM2	= 1253998.	AM	= 70.138
HP	= 349203.	AB	= 71.280
H	= 1404555.	W	= 1768039.
HP+H	= 1753758.	WM1	= 1753758.

WIDTH CHECK N(MIN) = .228

◆◆ FLANGE LOADS ◆◆

OPERATING
HD = 1187939.
HG = 349203.
HT = 216616.

BOLTING UP
W = 1768039.

◆◆ LEVER ARMS ◆◆

LT HD = 3.1790
LT HG = 1.6600
LT HT = 2.9068
LT HG = 1.6600

◆◆ FLANGE MOMENTS ◆◆

OPERATING
MD = 3776460.
MG = 579680.
MT = 629650.
MO = 4985790.

BOLTING UP
MA = 2934980.

BOLT SPACING CORRECTION FACTOR CF = 1.000
M1 = MO◆CF/B = 87337. M2 = MA◆CF/B = 51412.

◆◆ SHAPE CONSTANTS ◆◆

K = A/B =	1.206	LT H0	= 8.615	LT D	= 416.949
T =	1.836	LH/LH0	= .226	ALPHA	= 1.506
Z =	5.397	F	= .890	BETA	= 1.675
Y =	10.461	V	= .401	GAMMA	= .820
U =	11.496	LT F	= 1.337	DELTA	= .283
LG1/LG0 =	1.499	LT E	= .103	LAMBDA	= 1.103

◆◆ CALCULATED STRESSES ◆◆

	OPERATING	G/SEATING	ALLOWABLE
LONGITUDINAL HUB STRESS =	27874.	16409.	26759.4
RADIAL FLANGE STRESS =	5521.	3250.	} 17839.6
TANGENTIAL FLANGE STRESS =	8228.	4844.	
AVERAGE FLANGE STRESS =	18051.	10626.	

◆◆ FLANGE SPECIFICATION ◆◆

FLANGE UNCORRODED I/D	= 57.0870	EFFECTIVE THICKNESS	= 4.9020
FLANGE CORRODED I/D (B)	= 57.0870	HUB LENGTH (LT H)	= 1.9490
FLANGE O/D (A)	= 68.8580	HUB SMALL END THICKNESS	
NUMBER OF BOLTS	= 36	UNCORRODED	= 1.3000
BOLT DIAMETER	= 1.7500	CORRODED (LT G0)	= 1.3000
BOLT CIRCLE DIAMETER	= 65.3940	HUB BACK END THICKNESS	
GASKET I/D	= 61.0630	UNCORRODED	= 1.9490
GASKET O/D	= 62.7170	CORRODED (LT G1)	= 1.9490

JOB NUMBER: 8.86.04801 INTEGRAL HUB FLANGE RATING

◆◆ RATING FOR STRESS CALCULATIONS ◆◆

FLANGE R VALUE LESS THAN MINIMUM R FLANGE E VALUE LESS THAN MINIMUN E

FLANGE R VALUE = 2.2045
MINIMUM R VALUE = 2.2500
FLANGE E VALUE LESS THAN MINIMUN E GASKET WIDTH INADEQUATE@@@]CD^[-H(+

FLANGE E VALUE = 1.7320
MINIMUM E VALUE = 1.7500

◆◆ IMPERIAL UNITS ◆◆

◆◆ RATING CONDITIONS ◆◆

RATING PRESSURE = 464.1
VESSEL THICKNESS = 1.3000
CORROSION ALLOWANCE = 0.
OPERATING BOLT STRESS = 25005.
AMBIENT BOLT STRESS = 25005.

◆◆ GASKET & BOLTING CALCS ◆◆

FACING TYPE 1A COLUMN NUMBER 1

N	= .8270	LT Y	= 10000.
LT B	= .3215	LT M	= 3.000
b	= 62.0740		
WM2	= 626999.	AM	= 63.155
HP	= 174602.	AB	= 71.280
H	= 1404555.	W	= 1680739.
HP+H	= 1579157.	WM1	= 1579157.

WIDTH CHECK N(MIN) = .457

◆◆ FLANGE LOADS ◆◆

OPERATING
HD = 1187939.
HG = 174602.
HT = 216616.

BOLTING UP
W = 1680739.

◆◆ LEVER ARMS ◆◆

LT HD = 3.1790
LT HG = 1.6600
LT HT = 2.9068

BOLTING UP
LT HG = 1.6600

◆◆ FLANGE MOMENTS ◆◆

OPERATING
MD = 3776460.
MG = 289840.
MT = 629650.
MO = 4695950.

BOLTING UP
MA = 2790060.

BOLT SPACING CORRECTION FACTOR CF = 1.000
M1 = MO◆CF/B = 82260. M2 = MA◆CF/B = 48874.

◆◆ SHAPE CONSTANTS ◆◆

K = A/B	= 1.206	LT HO	= 8.615	LT D	= 416.949
T	= 1.836	LH/LHO	= .226	ALPHA	= 1.506
Z	= 5.397	F	= .890	BETA	= 1.675
Y	= 10.461	V	= .401	GAMMA	= .820
U	= 11.496	LT F	= 1.337	DELTA	= .283
LG1/LG0	= 1.499	LT E	= .103	LAMBDA	= 1.103

◆◆ CALCULATED STRESSES ◆◆

	OPERATING	G/SEATING	ALLOWABLE
LONGITUDINAL HUB STRESS =	26254.	15599.	26759.4
RADIAL FLANGE STRESS =	5200.	3090.	
TANGENTIAL FLANGE STRESS =	7750.	4604.	17839.6
AVERAGE FLANGE STRESS =	17002.	10101.	

◆◆ FLANGE SPECIFICATION ◆◆

FLANGE UNCORRODED I/D	= 57.0870	EFFECTIVE THICKNESS	= 4.9020
FLANGE CORRODED I/D (B)	= 57.0870	HUB LENGTH (LT H)	= 1.9490
FLANGE O/D (A)	= 68.8580	HUB SMALL END THICKNESS	
NUMBER OF BOLTS	= 36	UNCORRODED	= 1.3000
BOLT DIAMETER	= 1.7500	CORRODED (LT GO)	= 1.3000
BOLT CIRCLE DIAMETER	= 65.3940	HUB BACK END THICKNESS	
GASKET I/D	= 61.0630	UNCORRODED	= 1.9490
GASKET O/D	= 62.7170	CORRODED (LT G1)	= 1.9490

APPENDIX 5.3

Thermal Insulation: Technical Information and Heat Transmission

Plibrico Company Limited

Registered Office:
33-35 Upper George Street · Luton · Bedfordshire LU1 2RD
Telephone: (0582) 410707 Telex: 825255
Scunthorpe Works & Sales Office:
Woodhouse Road · Scunthorpe · South Humberside Tel: 0724 55731 Telex: 527467
Central Laboratory:
Warren Road · Scunthorpe · South Humberside Telephone: 0724 51254

TECHNICAL INFORMATION

PLICASTO TUFFLITE 250 R/G

TYPE

A high temperature, low iron, strong insulating castable, with good volume stability which can be cast or gunned into place.

GENERAL PROPERTIES (On Cast Material)

P.C.E. ..... 1500 °C
Best Service Range 1350 °C
Porosity — %
Setting .....Hydraulic
Coverage for 1 cu.ft. 39 Kgs approx
Coverage for 1 cu.m. 1377 Kgs approx
Maximum Grain Size ..... 5mm 3/16 in

Service Limit .....1400 °C
Air Dried Density .....102 lbs / Cu. ft.
Coefficient of Expansion 6.8 $\times 10^{-6}$ per °C
Storage Life ..... 12 months approx
Installation Method .. Casting or Gunning
Moist Curing Time ..... 24 Hours
Standard Packing ..... 25 Kg Paper Bags

Water Additions Per 25 Kg Bag - 6.3 Litres / 11 pints
Gunning - As necessary for good installation

Al_2O_3	SiO_2	Fe_2O_3	TiO_2	CaO	MgO	Alkalies
51.33%	32.74%	1.63 %	0.71 %	10.48 %	0.44 %	0.72 %

Firing Temperature		Bulk Density		Permanent Linear	Cold Crushing Strength		Cold Modulus of Rupture		Thermal Conductivity Mean Temp. Values	
°C	°F	Kg/m³	lb/ft³	Change %	Kg/cm²	lb/in²	Kg/cm²	lb/in²	K.cal/m/m²h°C	Btu in ft²h°F
110	230	1570	98	NIL	155	2200	45	640	—	—
500	932	1410	88	-0.12	127	1800	25	350	0.37	3.00
816	1500	1394	87	-0.20	112	1600	22	310	0.45	3.63
1000	1832	1378	86	-0.40	105	1500	21	300	0.50	4.00
1200	2192	1394	87	-0.60	98	1400	23	330	0.56	4.50
1400	2552	1410	88	-1.40	141	2000	28	400	—	—

The above are average results, but do not constitute a specification.

Plibrico Company Limited

Registered Office:
33-35 Upper George Street · Luton · Bedfordshire LU1 2RD
Telephone: (0582) 410707 Telex: 825255
Scunthorpe Works & Sales Office:
Woodhouse Road · Scunthorne · South Humberside Tel: 0724 55731 Telex: 527467
Central Laboratory:
Warren Road · Scunthorpe · South Humberside Telephone: 0724 51254

TECHNICAL INFORMATION

PLICASTO 200

TYPE A high alumina, high temperature, low iron, insulating castable.

GENERAL PROPERTIES - ON CAST MATERIAL

P.C.E. ..... 1850 °C
Best Service Range 20 - 1600 °C
Porosity - %
Setting ..... Hydraulic
Coverage for 1 cu.ft. 44 Kgs approx
Coverage for 1 cu.m. 1548 Kgs approx
Maximum Grain Size .....5 mm 3/16 in

Service Limit ..... 1700 °C
Air Dried Density ..... 98 lbs / cu.ft.
Coefficient of Expansion 8.5 x 10^{-6} per °C
Storage Life ..... 12 months approx
Installation Method .... Casting
Moist Curing Time ..... 24 Hours
Standard Packing .....25 Kg paper sacks

Water Additions - Per 25 Kg bag - 4.25 litres / 7.5 pints

Al_2O_3	SiO_2	Fe_2O_3	TiO_2	CaO	MgO	Alkalies
93.0%	0.60%	0.10%	Tr	6.60%	0.10%	0.10%

Firing Temperature		Bulk Density		Permanent Linear	Cold Crushing Strength		Cold Modulus of Rupture		Thermal Conductivity Mean Temp. Values	
°C	°F	Kg/m³	lb/ft³	Change %	Kg/cm²	lb/in²	Kg/cm²	lb/in²	K.cal/m/m²h°C	Btu in ft²h°F
110	230	1536	96	- 0.1	175	2500	24	350	0.744	6.00
500	932	1504	94	- 0.2	154	2200	25	360	0.645	5.20
1000	1832	1488	93	- 0.4	140	2000	25	360	0.682	5.50
1200	2192	1456	91	- 0.3	105	1500	8	120	0.781	6.30
1400	2552	1548	97	- 2.2	196	2800	56	800	-	-
1600	2912	1488	93	- 0.9	210	3000	70	1000	-	-

The above are average results, but do not constitute a specification.

Plibrico Company Limited

Registered Office:
33-35 Upper George Street · Luton · Bedfordshire LU1 2RD
Telex: 825255
Telephone: (0582) 410707
Scunthorpe Works & Sales Office:
Woodhouse Road · Scunthorpe · South Humberside Tel: 0724 55731 Telex: 527467
Central Laboratory:
Warren Road · Scunthorpe · South Humberside Telephone: 0724 51254

TECHNICAL INFORMATION

PLICASTO VERILITE 7 RG.

TYPE A low iron, aluminous insulating castable which can be cast or gunned into place.

GENERAL PROPERTIES (On Cast Material)

P.C.E. ..... 1280 °C
Best Service Range 100-1000 °C
Porosity — %
Setting .....Hydraulic
Coverage for 1 cu.ft. 24.6 Kgs approx
Coverage for 1 cu.m. 868 Kgs approx
Maximum Grain Size .....5mm 3/16 in

Service Limit ..... 1150 °C
Air Dried Density ..... 78 lbs / Cu. Ft.
Coefficient of Expansion 9×10^{-6} per °C
Storage Life ..... 12 months approx
Installation Method ...Casting or Gunning
Moist Curing Time ..... 24 Hours
Standard Packing ..... 25 Kg Paper Bags

Water Additions Per 25 Kg Bag - 14.3 Litres / 3.1 Galls.

8

Al_2O_3	SiO_2	Fe_2O_3	TiO_2	CaO	MgO	Alkalies
53.29%	24.76%	0.73%	0.28%	15.85%	0.59%	2.29%

Firing Temperature		Bulk Density		Permanent Linear	Cold Crushing Strength		Cold Modules of Rupture		Thermal Conductivity Mean Temp. Values	
°C	°F	Kg/m³	lb/ft³	Change %	Kg/cm²	lb/in²	Kg/cm²	lb/in²	K.cal/m/m²h°C	Btu in ft²h°F
110	230	1057	66.0	-0.1	70	1000	18	250	—	—
500	932	881	55.0	-0.6	32	450	6	85	0.13	1.10
816	1500	881	55.0	-0.8	27	380	6	85	0.15	1.25
1000	1832	881	55.0	-1.7	27	380	6	85	0.16	1.30
1150	2102	913	57.0	-1.9	22	320	7	100	—	—

The above are average results, but do not constitute a specification.

Plibrico Company Limited

Registered Office:
33-35 Upper George Street · Luton · Bedfordshire LU1 2RD
Telephone: (0582) 410707 Telex: 825255
Scunthorpe Works & Sales Office:
Woodhouse Road · Scunthorpe · South Humberside Tel: 0724 55731 Telex: 527467
Central Laboratory:
Warren Road · Scunthorpe · South Humberside Telephone: 0724 51254

TECHNICAL INFORMATION

PLICASTO AIRLITE

TYPE A very lightweight insulation castable. Suitable for back-up insulation only. It may be cast or trowelled into position.

GENERAL PROPERTIES (On Cast Material)

P.C.E.	1230 °C	Service Limit	950 °C
Best Service Range	100-900 °C	Air Dried Density	52 lbs / Cu. ft.
Porosity	— %	Coefficient of Expansion	10 x 10^{-6} per °C
Setting	Hydraulic	Storage Life	12 months approx
Coverage for 1 cu.ft.	12.7 Kgs approx	Installation Method	Casting
Coverage for 1 cu.m.	448 Kgs approx	Moist Curing Time	24 Hours
Maximum Grain Size	6.5mm ¼ in	Standard Packing	12.5 Kg Paper Bags

Water Additions Per 12.5 Kg Bag 16.8 Litres / 3.7 Galls.

Al_2O_3	SiO_2	Fe_2O_3	TiO_2	CaO	MgO	Alkalies
16.42%	42.20%	9.30%	0.48%	19.70%	9.99%	1.76%

Firing Temperature		Bulk Density		Permanent Linear	Cold Crushing Strength		Cold Modulus of Rupture		Thermal Conductivity Mean Temp. Values	
°C	°F	Kg/m^3	lb/ft^3	Change %	Kg/cm^2	lb/in^2	Kg/cm^2	lb/in^2	K.cal/m/m^2h°C	Btu in $ft^2h°F$
110	230	577	36.0	-0.3	4.2	60	1.4	20	—	—
500	932	433	27.0	-0.6	4.2	60	1.4	20	0.08	0.7
950	1742	449	28.0	-2.0	3.2	45	1.4	20	—	—

The above are average results, but do not constitute a specification.

Date: Feb 80 Ref. 4001

Plibrico Company Limited
33-35 Upper George St., Luton, Beds. LU1 2RD

Telephone:
(0582) 413601
Telex: 825255

HEAT TRANSMISSION CALCULATIONS

Project/Order

FOSTER WHEELER POWER PRODUCTS LTD.

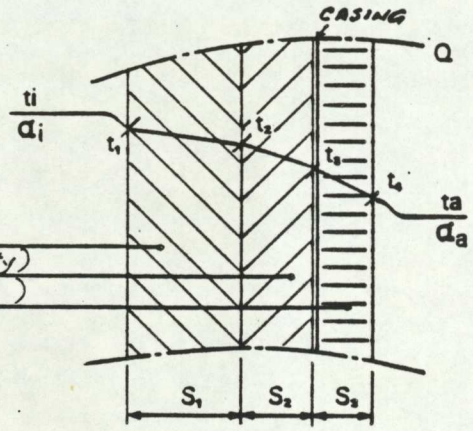

Lining Thickness				Lining Type
1	2	5	mm	PLICASTO 200
1	0	0	mm	PLISULATE 1260 (8 Lbs density)
	1	3	mm	PLISULATE 1260 (4 • ")
2	3	8	mm Total	(EXTERNAL)

ti = 1200 °C
ta = 21 °C

α_i = 50 kcal/m²h°C
α_a = 12 kcal/m²h°C

Hot Face Temperature	Mean Temperature	Thermal Conductivity
t_1 = 1182 °C	tm_1 = 1107 °C	λ_1 = 0.732 kcal/mh°C
t_2 = 1031 °C	tm_2 = 645 °C	λ_2 = 0.115 kcal/mh°C
t_3 = 260 °C	tm_3 = 177 °C	λ_3 = 0.070 kcal/mh°C
t_4 = 95 °C		

$\frac{1}{i}$ = 1/50	=	0.02
$\frac{S_1}{\lambda_1}$ = 0.125/0.732	=	0.171
$\frac{S_2}{\lambda_2}$ = 0.100/0.115	=	0.87
$\frac{S_3}{\lambda_3}$ = 0.013/0.070	=	0.186
$\frac{1}{\alpha_a}$ = 1/12	=	0.083
		1.330

ti =	1200	°C
	18	$(Q\frac{1}{\alpha_i})$
t_1 =	1182	°C
	151	$(Q\frac{S_1}{\lambda_1})$
t_2 =	1031	°C
	771	$(Q\frac{S_2}{\lambda_2})$
t_3 =	260	°C
	165	$(Q\frac{S_3}{\lambda_3})$
t_4 =	95	°C
	74	$(Q\frac{1}{\alpha_a})$
ta =	21	°C

$$Q = \frac{ti - ta}{\frac{1}{\alpha_i} + \frac{S_1}{\lambda_1} + \frac{S_2}{\lambda_2} + \frac{S_3}{\lambda_3} + \frac{1}{\alpha_a}} = \frac{1179}{1.330}$$

Q = 887 kcal/m²h

Sheet No. 2

Plibrico Company Limited
33-35 Upper George St., Luton, Beds. LU1 2RD

Telephone:
(0582) 413601
Telex: 825255

HEAT TRANSMISSION CALCULATIONS

Project/Order

FOSTER WHEELER POWER PRODUCTS LTD.

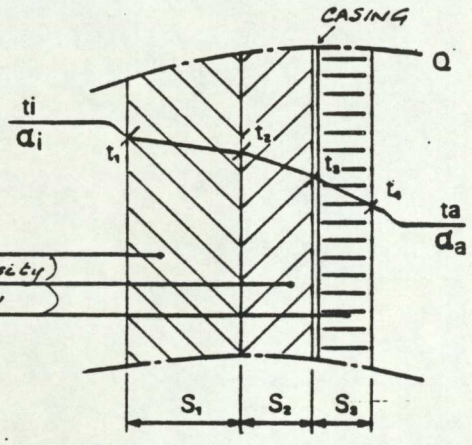

Lining Thickness				Lining Type
1	5	0	mm	PLICASTO 200
1	0	0	mm	PLISULATE 1260 (8 lbs density)
	1	3	mm	PLISULATE 1260 (4 " ")
2	6	3	mm Total	(EXTERNAL)

ti = 1200 °C
ta = 21 °C

α_i = 50 kcal/m²h°C
α_a = 12 kcal/m²h°C

Hot Face Temperature

t_1 = 1183 °C
t_2 = 1008 °C
t_3 = 250 °C
t_4 = 92 °C

Mean Temperature

tm_1 = 1096 °C
tm_2 = 629 °C
tm_3 = 171 °C

Thermal Conductivity

λ_1 = 0.730 kcal/mh°C
λ_2 = 0.112 kcal/mh°C
λ_3 = 0.070 kcal/mh°C

$\frac{1}{\alpha_i}$	$\frac{1}{50}$	0.02
$\frac{S_1}{\lambda_1}$	$\frac{0.150}{0.730}$	0.205
$\frac{S_2}{\lambda_2}$	$\frac{0.100}{0.112}$	0.893
$\frac{S_3}{\lambda_3}$	$\frac{0.013}{0.070}$	0.186
$\frac{1}{\alpha_a}$	$\frac{1}{12}$	0.083
		1.387

ti =	1200	°C
	17	$(Q\frac{1}{\alpha_i})$
t_1 =	1183	°C
	175	$(Q\frac{S_1}{\lambda_1})$
t_2 =	1008	°C
	758	$(Q\frac{S_2}{\lambda_2})$
t_3 =	250	°C
	158	$(Q\frac{S_3}{\lambda_3})$
t_4 =	92	°C
	71	$(Q\frac{1}{\alpha_a})$
ta =	21	°C

$$Q = \frac{ti - ta}{\frac{1}{\alpha_i} + \frac{S_1}{\lambda_1} + \frac{S_2}{\lambda_2} + \frac{S_3}{\lambda_3} + \frac{1}{\alpha_a}} = \frac{1179}{1.387}$$

Q = 850 kcal/m₂h

Sheet No. 3

Plibrico Company Limited
33-35 Upper George St., Luton, Beds. LU1 2RD

Telephone:
(0582) 413601
Telex: 825255

HEAT TRANSMISSION CALCULATIONS

Project/Order

FOSTER WHEELER POWER PRODUCTS. LTD.

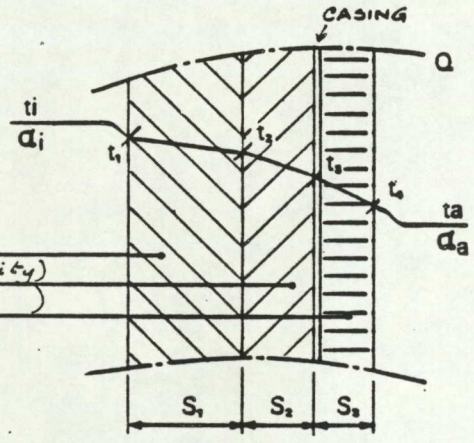

Lining Thickness				Lining Type
1	7	5	mm	PLICASTO 200
1	0	0	mm	PLISULATE 1260 (8 lbs density)
	1	3	mm	PLISULATE 1260 (4 " ")
2	8	8	mm Total	(EXTERNAL)

ti = 1200 °C
ta = 21 °C

α_i = 50 kcal/m²h°C
α_a = 12 kcal/m²h°C

Hot Face Temperature

t_1 = 1184 °C
t_2 = 987 °C
t_3 = 242 °C
t_4 = 89 °C

Mean Temperature

tm_1 = 1085 °C
tm_2 = 614 °C
tm_3 = 165 °C

Thermal Conductivity

λ_1 = 0.728 kcal/mh°C
λ_2 = 0.110 kcal/mh°C
λ_3 = 0.070 kcal/mh°C

$\frac{1}{\alpha_i}$	$\frac{1}{50}$	0.02
$\frac{S_1}{\lambda_1}$	$\frac{0.175}{0.728}$	0.24
$\frac{S_2}{\lambda_2}$	$\frac{0.100}{0.110}$	0.909
$\frac{S_3}{\lambda_3}$	$\frac{0.013}{0.070}$	0.186
$\frac{1}{\alpha_a}$	$\frac{1}{12}$	0.083
		1.438

ti =	1200	°C
	16	$(Q\frac{1}{\alpha_i})$
t_1 =	1184	°C
	197	$(Q\frac{S_1}{\lambda_1})$
t_2 =	987	°C
	745	$(Q\frac{S_2}{\lambda_2})$
t_3 =	242	°C
	153	$(Q\frac{S_3}{\lambda_3})$
t_4 =	89	°C
	68	$(Q\frac{1}{\alpha_a})$
ta =	21	°C

$$Q = \frac{ti - ta}{\frac{1}{\alpha_i} + \frac{S_1}{\lambda_1} + \frac{S_2}{\lambda_2} + \frac{S_3}{\lambda_3} + \frac{1}{\alpha_a}} = \frac{1179}{1.438}$$

Q = 820 kcal/m₂h

Sheet No. 4

Plibrico Company Limited
33-35 Upper George St., Luton, Beds. LU1 2RD

Telephone:
(0582) 413601
Telex: 825255

HEAT TRANSMISSION CALCULATIONS

Project/Order

FOSTER WHEELER POWER PRODUCTS LTD.

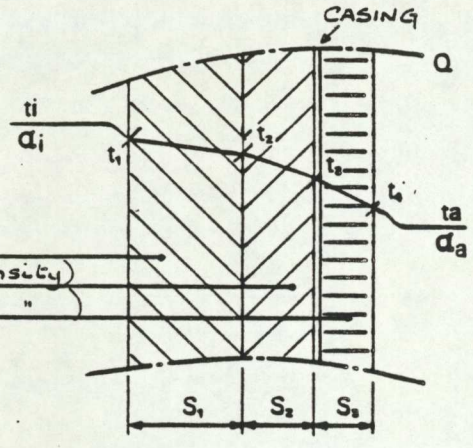

Lining Thickness				Lining Type
2	0	0	mm	PLICASTO 200
1	0	0	mm	PLISULATE 1260 (8lbs density)
	1	3	mm	PLISULATE 1260 (4 " ")
3	1	3	mm Total	(EXTERNAL)

ti = 1200 °C
ta = 21 °C

α_i = 50 kcal/m²h°C
α_a = 12. kcal/m²h°C

Hot Face Temperature	Mean Temperature	Thermal Conductivity
t_1 = 1184 °C	tm_1 = 1076 °C	λ_1 = 0.725 kcal/mh°C
t_2 = 967 °C	tm_2 = 600 °C	λ_2 = 0.107 kcal/mh°C
t_3 = 233 °C	tm_3 = 160 °C	λ_3 = 0.070 kcal/mh°C

$\frac{1}{\alpha_i}$ = 1/50	=	0.02
$\frac{S_1}{\lambda_1}$ = 0.200/0.725	=	0.276
$\frac{S_2}{\lambda_2}$ = 0.100/0.107	=	0.935
$\frac{S_3}{\lambda_3}$ = 0.013/0.070	=	0.186
$\frac{1}{\alpha_a}$ = 1/12	=	0.083
		1.500

ti =	1200	°C
	16	$(Q\frac{1}{\alpha_i})$
t_1 =	1184	°C
	217	$(Q\frac{S_1}{\lambda_1})$
t_2 =	967	°C
	734	$(Q\frac{S_2}{\lambda_2})$
t_3 =	233	°C
	146	$(Q\frac{S_3}{\lambda_3})$
t_4 =	87	°C
	66	$(Q\frac{1}{\alpha_a})$
ta =	21	°C

$$Q = \frac{ti - ta}{\frac{1}{\alpha_i} + \frac{S_1}{\lambda_1} + \frac{S_2}{\lambda_2} + \frac{S_3}{\lambda_3} + \frac{1}{\alpha_a}} = \frac{1179}{1.5}$$

Q = 786 kcal/m²h

Sheet No. 5

APPENDIX 5.4

Heat Transfer in Reactor Nozzles

Nomenclature

Q = Heat loss from cylinder (Watts)

T_i = Temperature on inside of pipe (K)

T_a = Ambient temperature (K)

T_o = Temperature on outside surface of insulation (K)

T_2 = Temperature of inside surface of pipe (K)

K_{i1} = Thermal conductivity of insulation on inside

K_{i2} = Thermal conductivity of outside (W/MK)

K_p = Thermal conductivity pipe (W/MK)

r_i = Radius on inside of internal insulation (mm)

r_2 = Radius on outside of internal insulation or (inside radius of pipe) (mm)

r_3 = Outside radius of pipe (mm)

r_o = Outside radius of insulation (mm)

h_o = Combined heat transfer coefficient at surface of insulation (W/M^2K)

h_r = Heat transfer coefficient due to radiation at surface (W/M^2K)

h_c = Heat transfer coeff. due to convection (W/M^2K)

ϵ = Temperature difference between outside surface (K) and ambient temperature

e = Emissivity of surface

σ = Stefan Boltzmann constant 5.67×10^{-8} W/M^2K^4

B = $1/T$ mean = $1/\{T_o + T_a\}$

g = Acceleration due to gravity 9.81 M/S^2

ρ = Density of air at mean temperature

μ = Dynamic viscosity at mean temperature

K = Thermal conductivity

1.0 HEAT TRANSFER IN REACTOR NOZZLES

1.1 Introduction

Reactor nozzle linings thicknesses were calculated by an iterative method (described below) in which heat transfer through the composite lining was determined in relation to the metal temperature (300 C max) and surface temperature. Plibrico linings were specified and installed (sub-contracter). The calculations were executed to check sub-contracter information.

1.2 Reactor Feed Inlet Nozzle

Using the following formulae for heat loss:

$$\dot{Q}/L = \frac{2\pi(T_i - T_a)}{1/K_{i1}\ln(r_2/r_i)+1/Kp\ \ln(r_3/r_2)+1/K_{i2}\ \ln(r_o/r_3)+1/h_o r_o}$$

$$T_i - T_2 = \frac{\dot{Q}}{2\pi K_{i1}}\ln(r_2/r_i)$$

$$T_i - T_o = \dot{Q}/2\pi\{1/K_{i1}\ln(r_2/r_i)+1/Kp\ \ln(r_3/r_2)+1/K_{i2}\ \ln(r_o/r_3)\}$$

$$h_o = h_c + h_r$$

$$h_c = 1.32\ (\Theta/D_o)^{0.25} = 1.32\ (\{T_o - T_a/\}D_o)^{0.25}$$

$$h_r = e\,\sigma(T_o + T_a)(T_o^2 + T_a^2)$$

A computer programme was written to optimise these equations and obtain skin temperature and metal surface temperature. The programme also optimized h_c when G_r number involving properties of air was used :

$$h_c = 0.389 G_r \cdot^{25} K/D_o$$
$$= 0.389 (B g \rho^2 D_o^3 \epsilon/\mu^2) \cdot^{25} \times K/D_o$$

1.3 Summary of Results

Optimizing the equations for the specified nozzle the following was obtained:

Nozzle: 12" NB Sch 120 XXS ASTM A106 Grade B

Thickness of insulation on inside of pipe		
Plibrico 1260 ceramic fibre felt:		71.5 mm
Insulation on outside of pipe	:	31.0 mm
Heat loss	:	688 W/m
Surface temperature of outside insulation:		71 C
Temperature of pipe inside surface:		287 C

With lining in place orifice size (diameter)= 130 mm

1.4 Reactor Ash Discharge Nozzle

The convection term for heat loss alters the heat transfer coefficient h_c by:

$1.42 (\epsilon/D_o)^{0.25}$ (for vertical pipe)

Orifice size 200 mm (8") Temperature 800 C
16" O.D Sch 80 ASTM A10.6 Grade B with 25.4 mm of Plibrico 1260 insulation on outside of nozzle.
r_i=100 mm, r_2=125 mm

h_o	Q	T_o	h_o	T_2
11.16	791	69.4	11.16	234

1.5 Reactor Feed Nozzle

Orifice size 200 mm Temperature 600 C
14" O.D. Sch 80 - with 25.4 mm of Plibrico 1260 insulation on outside

h_o	Q	T_o	h_o	T_2
11.16	791	69.4	11.16	234

1.6 Worked Example

Reactor Feed Inlet Nozzle:
Conditions T_i = 1473 K
T_a = 293 K
Pipe 12" NB Sch 120 XXS. ASTM A106 B
71.5 mm - Pilbrico 1260 insulation on inside
31.0 mm - Pilbrico 1260 insulation on outside

Assume h_o : 11.0 (first estimate)

$$\frac{\dot{Q}}{L} = \frac{2\pi(1473 - 293)}{\frac{1}{0.089}\ln\frac{.13655}{.06505} + \frac{1}{50}\ln\frac{.16195}{.13655} + \frac{1}{0.089}\ln\frac{.19295}{.16195} + \frac{1}{11 \times .19295}}$$

$$= 688.13 \text{ W/m length}$$

$$(1473 - T_o) = \frac{688.13}{2\pi}\left\{\frac{1}{0.089}\ln\frac{.13655}{.06505} + \frac{1}{50}\ln\frac{.16195}{.13655} + \frac{1}{0.089}\ln\frac{.19295}{.16195}\right\}$$

T_o = 344.6 K (71.6 C)

$h_o^* = h_c + h_r$

$h_r = 0.9 \times 5.67 \times 10^{-8} \times (344.6 + 293)(344.6^2 + 293^2)$

$= 6.657$

$h_c = 1.32 \times \left(\frac{344.6 - 293}{2 \times .19295}\right)^{0.25} = 4.488$

$h_o^* = 11.145$

Reiterate with new value h_o^* until $h_o^* = h_o$

When h_o obtained:

$$(1473 - T_2) = \frac{688.13}{2\pi\ 0.089} \ln\left(\frac{.13655}{.06505}\right)$$

T_2 = 560.5K (287.5 C)

APPENDIX 7.1

Conveyor Support Springs

1.0 CONVEYOR SUPPORTS

1.1 Introduction

The conveyor is supported from the lower reactor flange Figure 7.5 and support springs mounted on the main structure. The springs were sized as shown below,to balance the turning moment arising from the cantalever action of the conveyor (including full water jacket) and contents, when supported from the reactor discharge flange alone. The effects of reactor temperature and pressure were examined for two cases:

a) vessel cold and pressurised and
b) hot and pressurised (300 C)

Assumptions:

a) The weight of the small attachments, 1.5" nozzles, handwheel and screw scroll may be neglected.
b) The weight of the metal water jacket may be neglected but not the weight of the water.

By direct measurement, 0.32 ft^3 of Molochite weighed 24 lbs. Therefore actual density = 75 lbf/ft^3.

1.2 Weights

Estimated weights Nuts/bolts/scroll/H_2O Jacket/etc.

Item		Weight(lbs)	
1	End cap	31	
2	12" = T	126	
3	12" NB std pipe 5´6" long	272	+10%
4	16" NB 300 lb S.O. flange	220	+10%
5	16" NB std pipe 1´ long	63	
6	12" 300 lb Blank 2 off @	184	+10%
7	12" 300 lb WN flange 4 off @	142	+10%
8	12" NB std pipe 9" long	37	
9	2" round bar 7´ long	75	
10	Bearing and seal block	162	

Cooling jacket water(D) 7´ at 40.2 lb/ft = 281 lbs

Density of Molochite = 75 lb/ft^3

This gives a point load at B of 2.5 x 75 = 188 lbs

+ at A Udl along length of 59 lbs/ft = 412 lbs

+ at C point load of 0.78 x 75 = 59 lbs

Total loading equivalent to: 2995 lbsf (1.34 tons)

= 13.332 KN

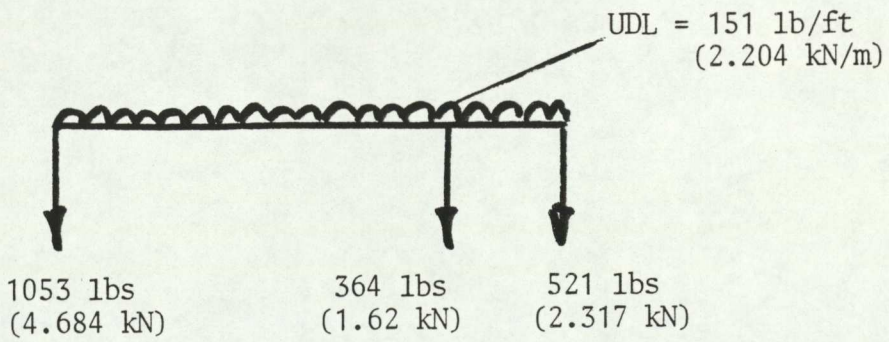

1.2.1 Loading

a) Cold Condition

Char/Ash removal system to place a tensile load on vessel flange equivalent to, say, force due to mass of blank flange used for hydro test ie 307 lbf (1.375 KN).

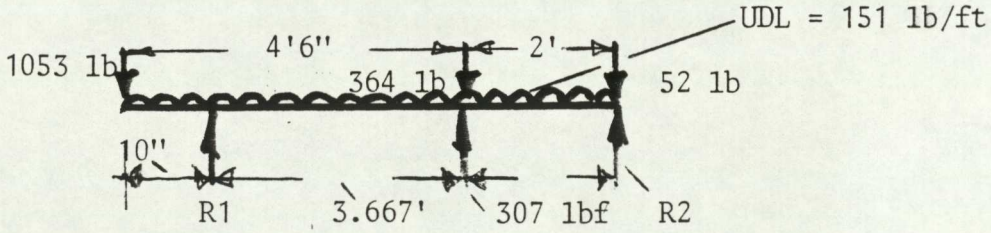

1.2.3 Hot Condition

Expansion of vessel is to compress support springs to the point where no load is applied to vessel flange and all screw feeder weight is carried by spring supports. Support arrangement becomes:

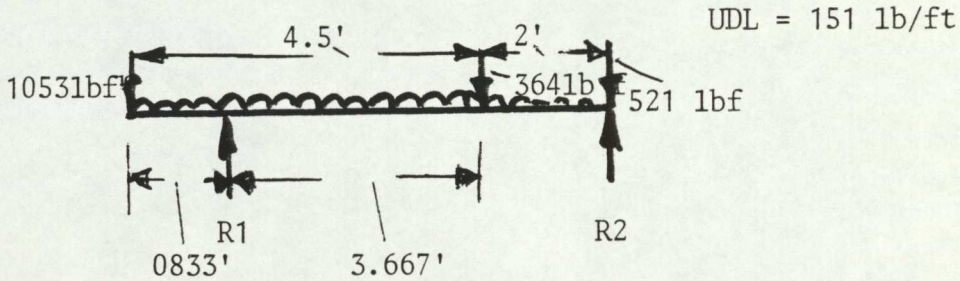

1.2.4 Vessel Expansion

Assumming coeficient of linear expansion (alpha) = 11.5 x 10^{-6} / C and maximum temperature rise of 300 C.

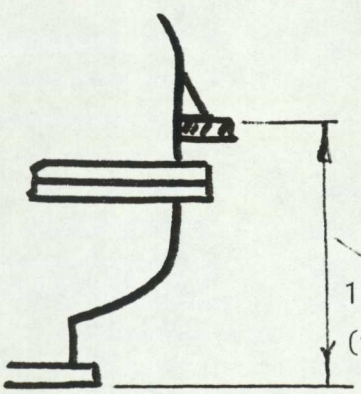

Vessel expansion=$L_0 t(\text{alpha})$

$=1.24 \times 300 \times 11.5 \times 10^{-6}$

$=0.043M$

Vessel expands downwards by 4.3mm

Support R_1

Cold load = 1791 lbf (7.97 KN)
Hot load = 1899.5 lbf (8.45 KN)
Load change = + 108.5 lbf (0.48 KN)
Spring travel = 4.3 mm
Spring Rate = (108.5/0.17) = 641 lbf/in
= 0.1116 KN/mm)
Prestrain when cold
= (1791/641)inches
= 71 mm (2.79")

Support R_2

Cold load = 821.7 lbf (3.66 KN)
Hot load = 1020 lbf (4.55 KN)
Load Change = 198.3 lbf (0.89 KN)
Spring Travel = 4.3 mm
Spring Rate = (198.3/0.17) = 1166.5 lbf/in
= 0.207 KN/mm)

Pre-strain when cold
= 821.7/1166.5 = 0.704"
= 17.7 mm)

2.1 Summary of Results

	Support R_1	Support R_2
Cold load	7.97 KN	3.66 KN
Hot load	8.45 KN	4.55 KN
Load change	0.48 KN	0.89 KN
Spring rate	0.1116 KN/mm	0.207 KN/mm

Hot Working Condition

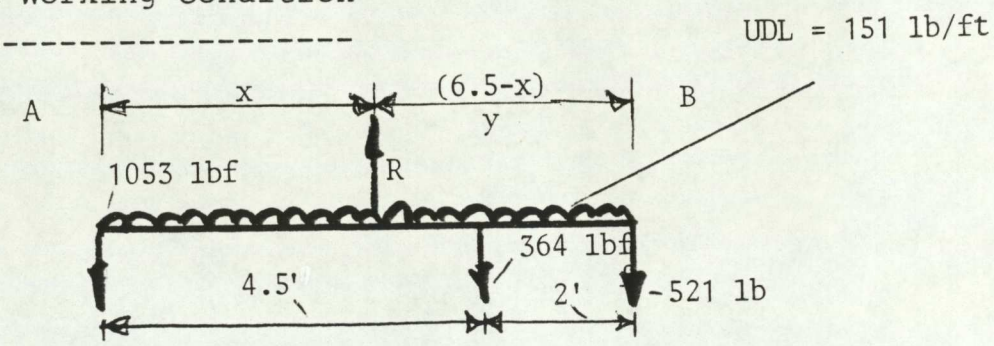

Total downward force = {1053 + 364 + 521 + (151 x 6.5)}

= 2919.5 lbf

Total upward force R = 2919.5 lbf (13 KN)

Moments about A:

{(364 x 4.5) + (521 x 6.5) + (151 x 6.5 x 3.25)} = 2919.5X

8214.4 = 2919.5X

X = 2.814´ (857.6mm)

Moments about B:

{(1053 x 6.5) + (364 x 2) + (151 x 6.5 x 3.25)} = 2919.5Y

10762.4 = 2919.5Y

Y = 3.686´ (1123.6mm)

X + Y = {3.686 + 2.814} = 6.5´ (total length)

Cold Condition

Again, assume a tensile load of 307 lbf acting on vessel flange.

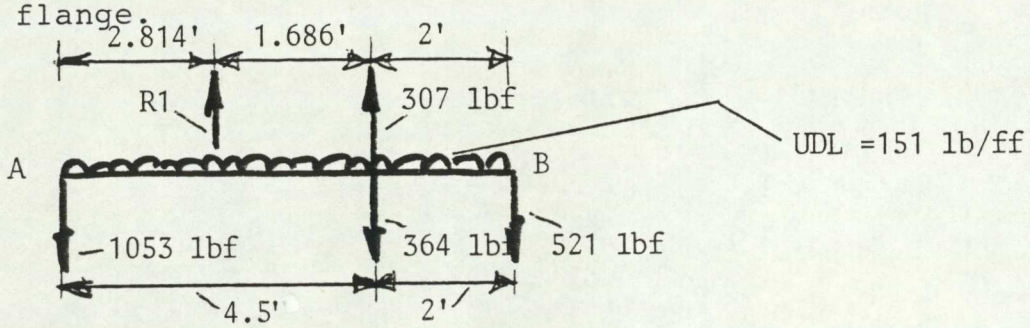

Moments about A

$2.814\ R_1 = \{(364 \times 4.5) + (521 \times 6.5) + (151 \times 6.5 \times 3.25) - (307 \times 4.5)\}$

$= 6832.9$ lbf

$R_1 = 2428.2$ lbf (10.81 KN)

Moments about B

$3.686\ R_1 = \{(1053 \times 6.5) + (364 \times 2) + (151 \times 6.5 \times 3.25) - (307 \times 2)\}$

$= 10148.4$ lbf

$R_1 = 2753.2$ lbf (12.3 KN)

Resolving vertically:

$\{1053 + (151 \times 6.5) + 364 + 521 - 307\} = R_1$

$R_1 = 2612.5$ lbf (11.63 KN)

The spring supports finally selected for installation (West Bromwich Spring Co) were as follows:

Support 1

Spring Rate = 0.111 KN/mm
Free length = 245 mm (9.646") [load = 0]
Solid length = 140 mm (5.5") [load = 11.7 KN]
Load of 7.5 KN @ 177.4 mm [67.6 mm (2.7") compression]

Load of 10 KN @ 154.9 mm [90.1 mm (3.6") compression]

Support 2

Spring Rate = 0.206 KN/mm
Free length = 85 mm (3.346") [load = 0]
Solid length = 49 mm (1.93") [load = 10.1 KN]
Load of 3.5 KN @ 68 mm [17 mm (.67") commpression]
Load of 5 KN @ 60.7 mm [24.3 mm (0.9") compression]

The design of the spring support hanger mounts is shown in Figure 7.6.

APPENDIX 7.2

Molochite Screen Analysis

TABLE A 7

Indicative Screen Analysis*

BSS Sieves	%
.25-8	-
-8	28
8-16	5
16-30	85
-22	29
-30	1
-120	-
-200	-

* Grade: -16-30

APPENDIX 8.1

Scrubber Design Check Calculations

1.0 SCRUBBER CALCULATIONS

1.1 Introduction

These calculations were undertaken to check and validate the to vendors coded design compliance in relation to the venturi scrubber vessel. The reference notes alongside the calculations are related to ASME VIII Div I unless otherwise stated. Details are taken from the manufacturing drawing shown in Figure 8.6 and Table 8.1 (Gas Cleaning System Specification).

1.2 Calculations

Design pressure 29 bar g (420.6 psi)
Operating pressure 32 bar g (462.7 psi)
Operating temperature 300 C (572 F)
Shell material A106 B
Allowable stress 15000 psi ASME VIII UCS - 23
Corrosion allowance 1.5 mm (.059")

From UG 27.1 on 6" N.B. SCH 40 Pipe

$$t_{min} = \frac{462.7 \times 3.0325}{(.85 \times 15000) - 0.6 \times 462.7}$$

t_{min} = 0.1125" (2.85 mm)

Including corrosion allowance: t = 0.1714" (4.36 mm)
Acceptable since for 6" N.B.Sch 40 wall thickness = 0.28" (7.11 mm)

From UG 27.1 on 20" N.B.Sch 40 pipe.

$$t_{min} = \frac{462.7 \times 9.407}{\{(.85 \times 15000) - (0.6 \times 462.7)\}}$$

t_{min} = 0.349"(8.86 mm)

Including corrosion allowance: $t = 0.408"$ (10.36 mm)
Acceptable since for 20" N.B.Sch40 wall
thickness = 0.593"(15.06 mm)

For 6" N.B. stainless steel pipe SA 312 type 304

S = 10,000 psi at 950 F

$$t_{min} = \frac{462.7 \times 3.0325}{(.85 \times 10{,}000) - (0.6 \times 462.7)}$$

t_{min} = 0.1706"(4.33 mm)

Including corrosion allowance $t = 0.23"$ (5.83 mm)
Acceptable since for 6" N.B.Sch 40 SS wall
thickness = 0.28"(7.11 mm)

For 4" N.B.Sch 160 Nozzles

$$t = \frac{PR}{SE - 0.6P} \qquad \text{(UG - 27 C[1])}$$

$$= \frac{462.7 \times 1.719}{(\{0.85 \times 15000\} - \{0.6 \times 462.7\})}$$

t = 0.0638"(1.62mm)

Thickness required = t + corrosion allowance
= 0.0638 + 0.059
tr = 0.1228" (3.12mm)

Acceptable since 4" N.B.Sch 160 = 0.531"(13.4 mm)
thick.

20" N.B.Sch 40 end cap material cast steel to A515
GR65
Maximum allowable stress at 300 C (572 F)
S = 16.3×10^3 psi

End cap is of ellipsoidal form: From UG - 32 a

$$t = \frac{PD}{2SE - 0.2P}$$

P = design pressure = 32 bar (462.7 psi)

E = joint efficiency = 0.85 (UW - 12 b)

D = inside diameter of 20" Sch 40 pipe = 18.814"

$$t = \frac{462.7 \times 18.814}{2 \times 0.85 \times 16300 - 0.2 \times 462.7}$$

t = 0.315" (8 mm)

Thickness required including corrosion allowance

= 0.315" + 0.059"

t_r = 0.374" (9.5 mm)

Acceptable since for 20" N.B.Sch 40 end caps = 0.593" (15.06 mm) thick.

For 20" N.B.Sch 40 end cap from UG - 37-B(3)

Minimum thickness of shell end cap (radial-reduced)

$$t_r = \frac{PK_1D}{2SE - 0.2P}$$

$\frac{D}{2h}$ = 1.0452 - K_1 = 0.51582 (Table UG-37)

$$t_r = \frac{462.7 \times 0.51582 \times 18.814}{2 \times 0.85 \times 16300 - 0.2 \times 462.7}$$

t_r = 0.1626" (4.13mm)

Minimum thickness including corrosion allowance

t_r = 0.1626 + 0.059 = 0.2216" (5.63mm)

Minimum nozzle thickness required

t_{rn} = 0.1228 (3.12mm)(Page 2:4" N.B.Sch 160 Nozzle)

APPENDIX 9.1

Furnace Burner Nozzle: Reinforcement Calculation

1.0 REINFORCEMENT CHECK:BURNER NOZZLE

1.1 Reinforcement Calculations

The calculation check was undertaken to determine whether reinforcement was needed for the burner mounting nozzle on the furnace vessel. Quoted references relate to ASME VIII Div I.

case (a) Set-on. Figure A9.1 and Figure A9.2

Design code ASME VIII Div 1 UG 34, Appendix L, Appendix 2. From L-7 Appendix L:

Area required $A = d \times t_r \times F$

t_1 = required thickness of flange for pressure in the furnace vessel

From UG 34:

$t = d\,([CP/SE] + [1.9 \times Wh_G/SEd^3])^{0.5}$

$d = (14.876 + 3) = 17.876$ in

$C = 0.3$

$P = 464$ psi

$S = 15000$ psi

$E = 1$

$h_G = 2.687$ in

W for operating conditions = Wmi

$= 0.785\,G^2P + (2b \times 3.14\,GmP)$

$G = 14.876 + 4.5 = 19.376$ in

$Wmi = \{0.785 \times (19.376)^2 \times 464\} +$

$\{(2 \times 0.866 \times 3.14 \times 19.376 \times 3 \times 464)\}$

$= 283429$ psi

$t_r = 19.376\,\{[0.3 \times 464/15000] +$

$(1.9 \times 283429 \times 2.687/(15000 \times [19.376]^3))\}$

$= 2.9$ in

If $t_r = t$ that is, required thickness of flange equals actual thickness of flange used. How much reinforcement?

$A = d \times t_r \times F = 2.624 \times 2\,3/8 \times 1 = 6.232$ in^2

If the nozzle does not protrude into the flange ('set through') there is not enough reinforcement. Try a protrusion of 1 in and maybe a stiffening ring.

case (b) set-through. Figure A9.3

$\{A_1 + A_2 + A_3 + A_{41} + A_{42}\}$ greater than or equal to A

$A_1 = 0$

$A_2 = 5(t_n - t_{rn})\, f_r t_n = 5(0.438 - [1/16])\ 1 \times 0.438$

$= 0.822\ in^2$

$A_{41} = 0.25\ in^2$

$A_{42} = 0.25\ in^2$

$A_3 = 2(t_n - c)\, f_r \times h$

$= 2(0.438 - [1/16]) \times 1 \times 1 = 0.751\ in^2$

Summing: $A_1 + \ldots\ldots + A_3 = 2.073\ in^2$

Still not enough reinforcement: Use a ring.

case (c) set-through plus ring. Figure A9.4

Limit of reinforcement D_p can be d or $R_n + t_n + t$

(Use larger value)

$d = 2.624$ in $(1.312 + 0.438 + 2\,3/8) = 4.125$ in

D_p can be up to 8.25 in

If $D_p = 8.25$ in $t_e = 0.84$ in

$A_1 + A_2 + A_3 + A_{41} + A_{42} + A_{43} + A_5 \geq A$

$A_1 = 0$

$A_2 = 0.822\ in^2$

$A_3 = 0.751$ ..

$A_{41} = 0.25$ ..

$A_{42} = 0.25$ ..

$A_{43} = 0.25$ ..

$A_5 = (8.25 - 2.624 - 0.876) \times (0.84 \times 1) = 4\ in^2$

Summing: $A_1 + \ldots\ldots + A_5 = 6.323\ in^2$

This is acceptable as the total area exceeds the calculated area of 6.232 in^2. The dimensions of the stiffening ring are: 8.25 in od x 3.5 in id x 0.84 in thick with 0.5 in welds and a 1 in projection through the flange with 0.5 in welds.

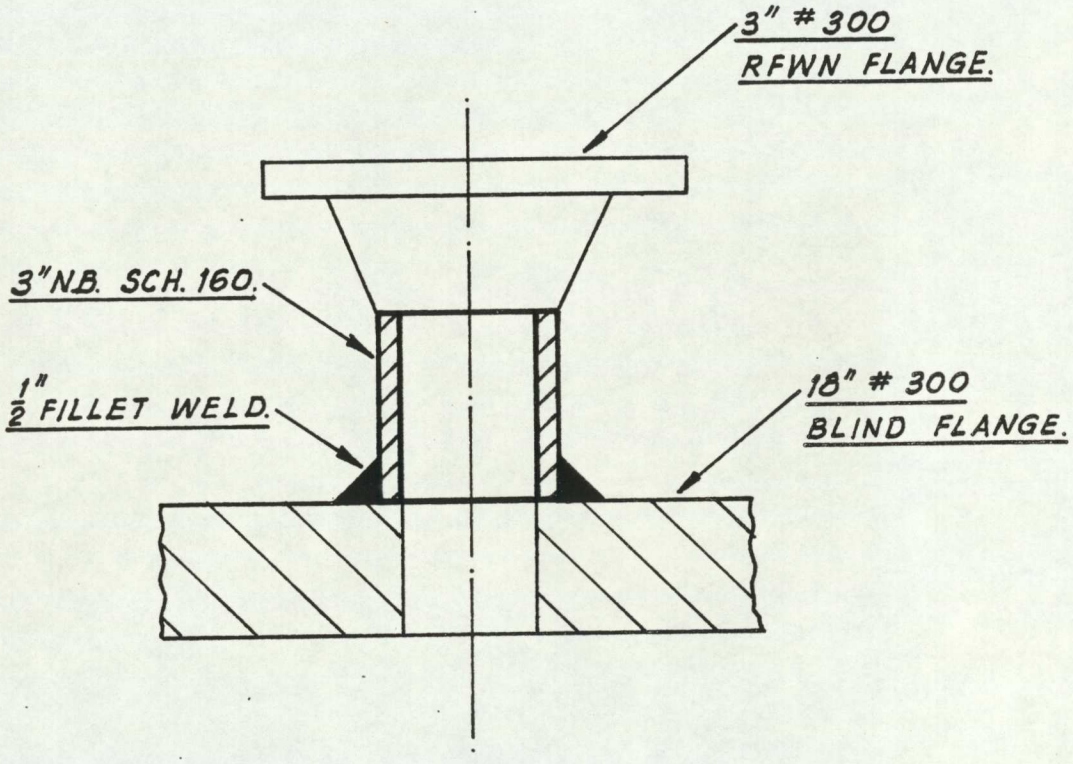

FIG. A9-1 'SET ON' NOZZLE

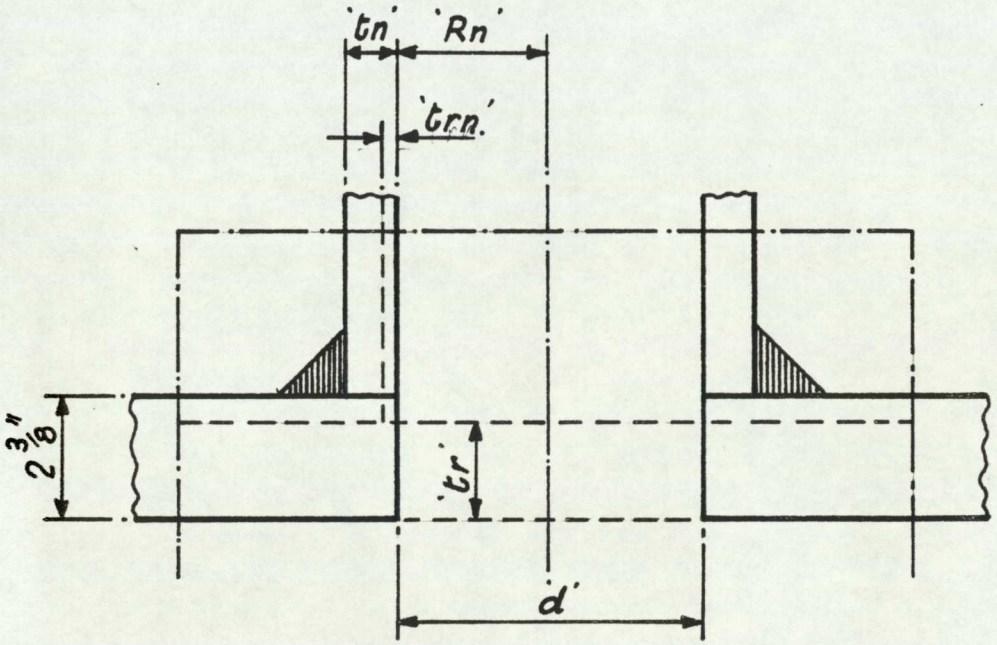

FIG. A 9·2 'SET ON' NOZZLE DETAIL.

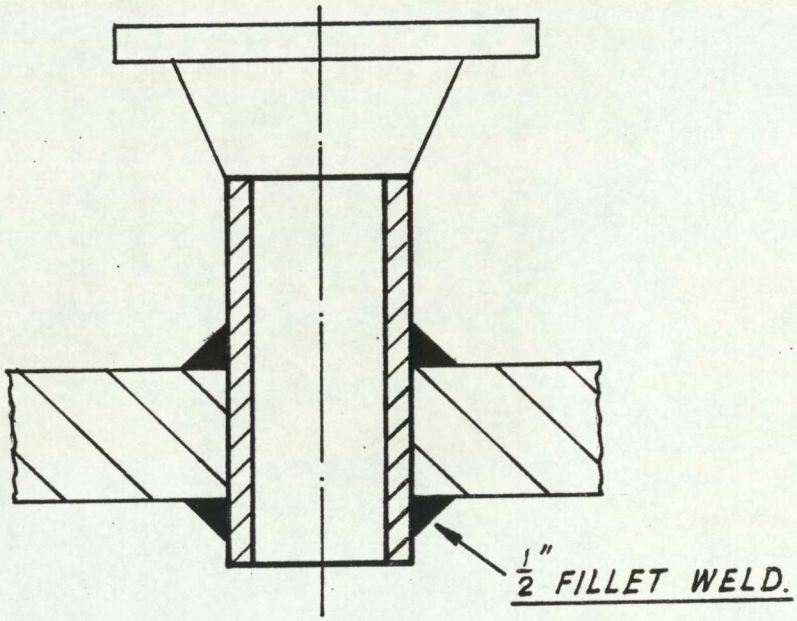

FIG. A9·3 'SET THROUGH' NOZZLE.

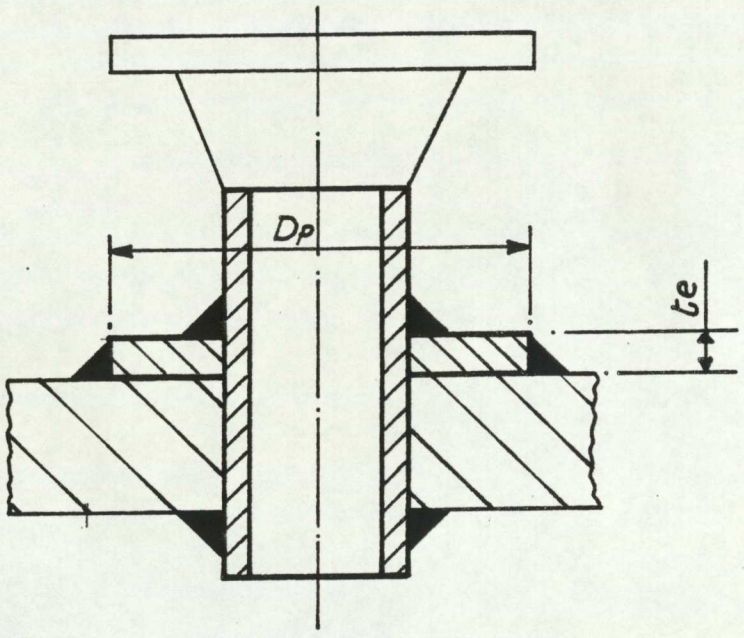

FIG. A9·4 'SET THROUGH' NOZZLE PLUS REINFORCEMENT.

APPENDIX 9.2

Oxy-propane Burner Cooling Estimate

1.0 OXY-PROPANE BURNER COOLING

This calculation was performed to estimate the heat transfer and temperature at the oxy-propane burner support flange bolted to the burner nozzle which, in turn, is set on the furnace vessel. As previously noted (Chapter 9.0) the maximum furnace metal temperature selected to be 300C.

1.1 Flange Cooling Requirement Estimate

Assume burner tip temperature of metal 2000 C (Excessive)
cross-section of burner 45 mm O.D. x 34 mm I.D.
Cross sectional area = 682.5×10^{-6} m^2

Thermal conductivity (K) of Incoloy 800 at 980 C = 30.9 W/m C (see Figure 10.14)
Length (L) of burner probe to flange = 0.785 m

All heat loss should be from flange face at maximum temperature of 300 C.

Quantity of heat passing along burner:

$q = KA/L\ (T_2 - T_1)$
$q = 30.9 \times 682.5 \times 10^{-6}/0.785\ (2000 - 300)$
$q = \underline{45.7 \text{ Watts}}$

1.2 Heat Rejected from Flange

Assume flange to be a vertical disc:

A 3in 300 lb flange is 8.25in O.D.
Assume free convection from flange surface
Assume approximate equation turbulent flow [Holman]

$h = 0.95\ (dT)^{0.33}$
$h = 0.95\ (300 - 20)^{0.33}$
$h = 6.2\ W/m^2\ C$

Heat loss from flange face

$q = h A dT$

$q = 6.2 \times [\pi \times \{(8.25 \times 25.4/1000)/4\}^2 (300 \times 20)$

$q = 59.8$ Watts

The flange can lose more heat than is transmitted through burner tube and will therefore be at a temperature less than 300 C (but not much less).

THE FLANGE MUST NOT BE LAGGED

$q = 0.95 A (dT)^{0.33}$

$T = (q/0.95A)^{0.75}$ Using $q = 45.7$ Watts

$= 228$ C

Maximum flange temperature would be 208 C due to conduction.

APPENDIX 10.1

Specimen Calculation - Superheater Thermal Design

1.0 Introduction

This specimen calculation sets out the calculation procedures adopted for determination of the required superheater design duty. Only one case is considered, that of a 1.25 in diameter tube. Procedures would be identical for tubing of different sizes but would take into account pressure variations, tube material, sectional area etc.

2.0 Calculations

Pressure 2 bar absolute

Inlet Temperature = (Saturated steam) 120.2 C (248.4 F)

Outlet Temperature = 800 C (1472 F)

Inlet Enthalpy = 2707 kj/kg

Outlet Enthalpy = 4157.8 kj/kg

Specific Volume = 2.4754 m^3/kg

Maximum allowable velocity of steam

= 50 m/sec

= mv/A

$$m \text{ max.} = 50 \times [\pi \times (0.03505)^2] / [4 \times 2.4754]$$

$$= 0.01949 \text{ kg/s}$$

$$m \text{ max.} = 70 \text{ kg/h}$$

Heat load required = 0.01949 (4157.8 - 2707)

= 28.275 KW

Total steam path for heat transfer = 30.84 m. (101.18 ft)

Assume 100 C tube/steam temperature gradient

Average tube temperature = $\frac{1}{2}$ [(900 - 220.2) + 220.2]

= 560.1 C

$$\text{Heat input to steam} = \frac{28.275 \times 3412}{101.18} = 953.49 \text{ Btu/ft hr}$$

$$G = \frac{70 \times 2.2046}{\pi (1.38)^2} \times \frac{4 \times 144}{} = 14857 \text{ lb/ft}^2 \text{ hr}$$

Steam average temperature = [560-100] = 460 C

Specific Heat (Cp) = 2.11 kj/kg K (0.50405 Btu/lb F)

Viscosity (μ) = 268 poise (0.0648 lb/ft hr)

Thermal

Conductivity (k) = 62.4 mW/m K (0.03608 Btu/ft hr F)

Tube/Steam Layer temperature gradient = 100 C

u_w at 560 C = 308.4 poise (0.0746 lb/ft hr)

$$Re = \frac{\rho dv}{\mu} = \frac{Gd}{\mu} = \frac{(14857 \times 1.38)}{(12 \times 0.0648)}$$

Re = 26366

Reference: Kern pp. 834 Figure 24.

J_h = 86 (at Re = 26366)

$$\left(\frac{cp\mu}{k}\right)^{.33} = \left(\frac{0.50405 \times 0.0648}{0.03608}\right)^{.33} = 0.9674$$

$$\left(\frac{\mu}{\mu_w}\right)^{0.14} = \left(\frac{0.0648}{0.0746}\right)^{0.14} = 0.9805$$

$$h_i = \frac{j_h}{D} \frac{k}{} \left(\frac{Cp\mu}{k}\right)^{.33} \left(\frac{\mu}{\mu_w}\right)^{0.14}$$

$$= \frac{(86 \times 0.03608 \times 12)}{1.38} (0.9674) (0.9805)$$

h_i = 25.59 Btu/hr ft^2 F

Therefore tube temperature gradient (ΔT)

$$= \frac{\text{heat i/p to steam}}{A\ h_i}$$

$$= \frac{953.49 \times 12}{(1.38 \times \times 25.59)} = 103.12 \text{ F}$$

Average tube temperature = (860 + [103-12])

= 963.12 F (517.3 C)

This gives a tube/steam temp gradient of only 39.5 C.

When reworked using a figure of 40 C (rather than 100 C)

Re = 26367.3

j_h = 86

$\left(\frac{Cp\,\mu}{k}\right)^{.33}$ = 0.9679

$\left(\frac{\mu}{\mu_w}\right)^{.14}$ = 0.992

and h_i = 25.85 Btu/h ft^2 F

Therefore tube temperature gradient t = 102 F

Average tube temperature = 962 F

Maximum tube temperature = 839.9 C

This matches the assumed temperature gradient.

APPENDIX 10.2

Superheater Busbar Clamps

1.0 CURRENT CLAMPS

1.1 Introduction

As was discussed in chapter 10.0, Busbar clamps are needed to link the superheater tubing to the power transformers for the steam superheat system. The clamps will reach tube wall temperatures unless cooled. The following calculations provide insight into the procedures followed to determine heat losses from the clamps when cooling fins are fitted. The calculations were also used to establish whether fins were needed for the low temperature cases.

1.2 Heat Loss from Fins

A decision was taken to mount cooling fins on the clamps so that heat entering the clamp by conduction could be rejected to atmosphere by convection and radiation. Fin dimension were in part determined by the transformer terminal dimension and also by assumption based on previous fin design experience.

Fin dimension 40 mm wide x 170 mm long x 3 mm thick

$L_c = L + t/2 = [40 + {}^3/_2] = 41.5$ mm

$m = (2h/Kt)^{0.5}$ $\quad K = 35$ W/m C at 600 C

$h = 20$ W/m^2 C

$m = [(2 \times 20)/(35 \times 3 \times 10^{-3})]^{.5} = 19.5$

$q = m\ K\ A\ dT \tanh (mlc)$

$dT = (600 - 50)$

$= 550$ C

$q = (19.5 \times 35 \times 0.17 \times 3 \times 10^{-3} \times 550$

$\tanh (19.5 \times 0.0415))$

$q = 130$ Watts

Possible heat loss from 12 fins = 1.5 KW

Heat generated $Q_g = I^2 \rho (L)/A$

$= 10002\ (126 \times 10^{-6} \times 20)/(10 \times 6.4)$

$= 40$ Watts

Assuming that generated heat can be neglected and that only the fins remove the conducted heat.

From superheater calculation, heat transfer coefficient between tube and steam = 25.85 Btu's/ft^2 hr F(150 W/m^2 C)

Tube heat transfer area is 100 mm long x 35 mm diameter

Heat transfer rate = 1.65 Watts/ C

Heat conduction rate $q = KA\ dT/(x)$

$= (24 \times 0.0064)\ /0.17$

$= 0.9$ Watts/C

Hence the heat conduction rate will limit the quantity of heat transferred through the connector block.
For a temperature difference (dT)= 950 C

Heat transfer by conduction= 855 Watts

Assuming heat is lost by convection alone (enough heat will be radiated to make an appreciable difference)

Using $h_{air} = 0.95\ (dT)^{0.33}$
Assuming ambient air temperature =50 C

$m = (2h/kt)^{0.5}$ $q = mKA\ dT\ \tanh\ (mL_c)$

TABLE A1

Summary Fin Calculations

T	h	m	mL_c	tanh (mL_c)	q/m/fin
1000	9.3	13.3	0.55	0.50	663
900	9.0	13.1	0.54	0.49	573
800	8.6	12.8	0.53	0.49	494
700	8.2	12.5	0.52	0.48	410
600	7.8	12.2	0.51	0.47	331
500	7.3	11.8	0.49	0.45	251
400	6.7	11.3	0.47	0.44	183
300	6.0	10.7	0.44	0.41	115
200	5.0	9.8	0.40	0.38	59
100	3.5	8.2	0.34	0.33	14

Since temperature is directly proportional to length in the conduction equation $q = KA\ dT/x$

$$q/fin = \sum_{200}^{1000} q/m/fin \times 0.17/9$$

$q/fin = 58.2$ Watts

Minimum total cooling available $= (12 \times 58.2)$
$= 700$ Watts

$$\text{Average Thermal conductivity } \sum_{200}^{1000} k \ /n = 21.8 \text{ Watts/m C}$$

$q/dT = KA/x$
$= (21.8 \times 0.0064/0.17)$
$= 0.82$ Watts/ C

Minimum temperature difference $dT = (700/0.82) = 854$ C

<u>Electrical connection temperature approximately 150 C Max</u>

For the cooler 2nd clamp T= 800 C (Approximately)

$$q/fin = \sum_{100}^{800} q/m/fin \times 0.17/8$$

$q = 39.5$ Watts/fin $\times 12 = 474$ Watts

$$\sum_{100}^{800} k \ /n = 18.8 \text{ Watts/m C}$$

Average thermal conduction rate
$q/dT = (18.8 \times 0.0064)/0.17$
$= 0.71$ Watts/ C

Maximum Electrical contact temperature

= (800 - 474/0.71)

= 130 C

Still require fins for cooling.

For 3rd Clamp q = 27 Watts/fin T=600 C (Approximately)

q = 324 Watts

$$\sum_{100}^{600} k/n = 17 \text{ Watts/m C}$$

Average thermal conduction rate = 0.64 Watts/ C

Maximum Electrical contact temperature

= (600 - 324)/0.64

= 100 C

Check to establish validity of using fins.

Surface area of clamp = 2 x 0.17 x (0.0064 + 0.1)

= 0.036 m^2

Using $h = 0.95 (dT)^{0.33}$ $dT = \{(600 + 100)/2\} - 50 = 300$ C

$h = 6.4$ Watts/m^2 C

Convection loss without fins

= 6.4 x 300 x 0.036

= 69 Watts

Therefore fins are required on 3rd clamp

For 4th Clamp $q = \sum_{100}^{600} q/m/fin \times 0.17/4$

q = 189 Watts with fins

$q = 0.95 [\{(400 + 100)/2\} - 50]^{.33} 0.036$

= 40 Watts without fins

Average thermal conduction $\sum_{100}^{400} k /n = 15.5$ Watts/m C

Average conduction rate = 0.583 Watts/ C

Maximum Electrical convection temperature with fins = 76 C

Maximum Electrical convection temperature no fins = 330 C

Hence use fins on 4th clamp.

APPENDIX 10.3

Example of Welding Procedure

WELDING STANDARD	Foster Wheeler Power Products Limited	STANDARD No. 2/55/T/1
	SCOPE: OPEN BUTT WELDING OF INCOLOY 800 TUBES.	F.W. CORR EQUIV.

METHOD OF WELDING.

ROOT AND FILL : T.I.G. WITH FILLER.

WELDING POSITION.

ALL POSITIONS

METHOD OF PREPARATION

MACHINED OR HAND GROUND

WELD DRESSING.

NOT NORMALLY REQUIRED

EXAMINATION.

AS PER CONTRACTUAL REQUIREMENTS & DISCRETION OF QUALITY ASSURANCE DEPT.

JOINT STYLE 2/2

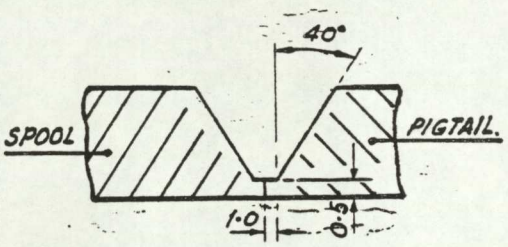

TUBE SIZE

Up to 114 O.D.
3 to 12 incl. Wall Thickness

APPLICABLE CODE: B.S.2633 ASME

HEAT TREATMENT.

PREHEAT.	INTERPASS.	STRESS RELIEF.	METHOD & MEASUREMENT OF PREHEAT.
NONE (Do not weld below 15°C).	100°C. MAX.	NONE	ELECTRICAL USING PYROMETERS.

CONSUMABLES.

T.I.G. WIRE.		ARGON TO TORCH.	ARGON BACK PURGE.
AWS. SFA5-14ERNiCr-3		99.95% MIN. PURITY	99.95% MIN. PURITY
WIGGIN-INCONEL 82.		15 cu.ft/hr	15 cu.ft/hr

ALTERNATIVE CONSUMABLES.	ALTERNATIVE CONSUMABLES MAY BE USED PROVIDING THEY COMPLY WITH THE RELEVANT SPECIFICATION. SEE ABOVE.

PARAMETERS.

T.I.G. 1, 2 or 2.4 dia. wire. 70-90 Amps.
(All passes with filler wire).
D.C. NEG.
Tungsten 2.4 Dia. Thoriated.

OTHER REQUIREMENTS.

Back purge must continue until weld is completed.
Stops and starts must be ground clean before proceeding.

NOTE: IN ALL CASES CONTRACTUAL REQUIREMENTS MUST BE COMPLIED WITH IN ADDITION TO INSTRUCTIONS GIVEN ABOVE.

Approval.

Test Cert.
Lab Report
Ref. 5816.

STAMP OF APPROVAL.

REVISIONS. 0 1 2

DATE 30.4.75 CERT. NO. 5816

FOSTER WHEELER JOHN BROWN BOILERS LIMITED

0429-66688 BRENDA ROAD · HARTLEPOOL CLEVELAND TS25 2BU Telex: 58358

LABORATORY TEST CERTIFICATE

CUSTOMER B.P. (Grangemouth). ORDER NO. 1-68-03481

DESCRIPTION Weld Procedure Test to 2/55/T/specification for Spool-Pigtail welds in Incoloy 800 material. T.I.G. process with Inconel 82 filler wire.

TENSILE TEST		T.373. MARK001585/19-20				REMARKS
		Cross Joint 1	Cross Joint 2			
Dimensions of test piece Section (m.m)		18.9 x 4.8	19.65 x 4.6			Welder: E. Dowd.
Area (m.m^2)		85	90.2			
Gauge Length (m.m)						
(I) Y.P.	Load (kN)					For further welding details, precautions and N.D.T. results, see attached data sheet.
(II) P.S.	Stress (MNm^{-2})					
Max Stress	Load (kN)	47	52			
	Stress (MNm^{-2})	553 *	576 **			
Elongation (%)						
Reduction of Area (%)						
BEND TESTS		Angle	Dia. former	Root/face/side		
		180°	4T	2 / 2 / 1 off		
Result:		ALL SATISFACTORY.				
IMPACT TESTS						* Fracture in spool mat'l.
Position			Result (J)			** Fracture in spool heat affected zone.

Macro/Micro Examination

Satisfactory - Figure 1 refers.

Hardness

Chemical Analysis

DISTRIBUTION:

Mr. K. Wright. (4) ✓
Mr. W. Pettit. (1)
Mr. A. Heron. (1)
Lab. Records. (3)

INSPECTION

N.R. Wardell

J.D. Garner.
Laboratory Superintendent.

FOR F.W.J.B.B. LTD.

Checked By:

TEST WELD DATA AND HISTORY SHEET

SUBMISSION NO: 00[illegible]

Specification: 2 55/T	PROCEDURE / ~~QUALIFICATION~~ / ~~PRODUCTION~~ / ~~DOMESTIC~~		Welder(s): E DOWD
Customer: BP (Grangemouth) Ltd	Contract No: 1 - 63 - 03421	Inspection: BP (Grangemouth) Ltd	
Base Material: Incoloy 800	Base material specification: -	Cast No. Spool 80381 / Pigtail -	Cast No. W8238 / -
Dimensions: 305 × 42 × 5		WELDING PROCESS: TIG	Identification:
Flux: —	Stress Relief: Not required/~~Required~~/~~Completed~~		

Interpass Temperature	100	°C/°F	Method of measurement: PYROMETER	Position of welding: 2G
Pre-heat	—	°C/°F		

SKETCH:

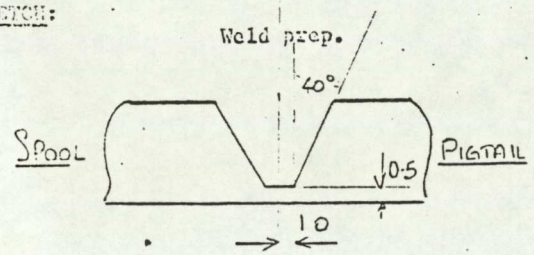

Sequence of deposition

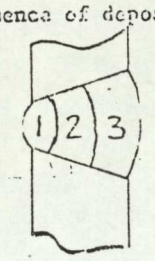

FILLER MATERIAL	WIRE	WIRE	WIRE (AUTO)	ELECTRODES	
Type	INCO 82	INCO 82			
Size	1.2	2.4			
Cast/Batch No.	KTH 9955	NTT 8273/13			
Amps	70	90			
Volts	—	—			
Speed	—	—			
Inert Gas Flow TORCH	15 CFH	15 CFH			
Inert Gas Flow PURGE	15 CFH	15 CFH			

NON DESTRUCTIVE TESTING RECORD

Operation	Stage	Result & Date		
DYE CHECK	FIRST LAYER	SATISFACTORY		
	FINAL	SATISFACTORY		
RADIOGRAPHY	FINAL	SATISFACTORY		

Weld test initiated by: K WRIGHT
Date: 24 4 75
Date of completion: 24.4.75

REMARKS: SEE SEPARATE SHEET FOR WELDING TECHNIQUE

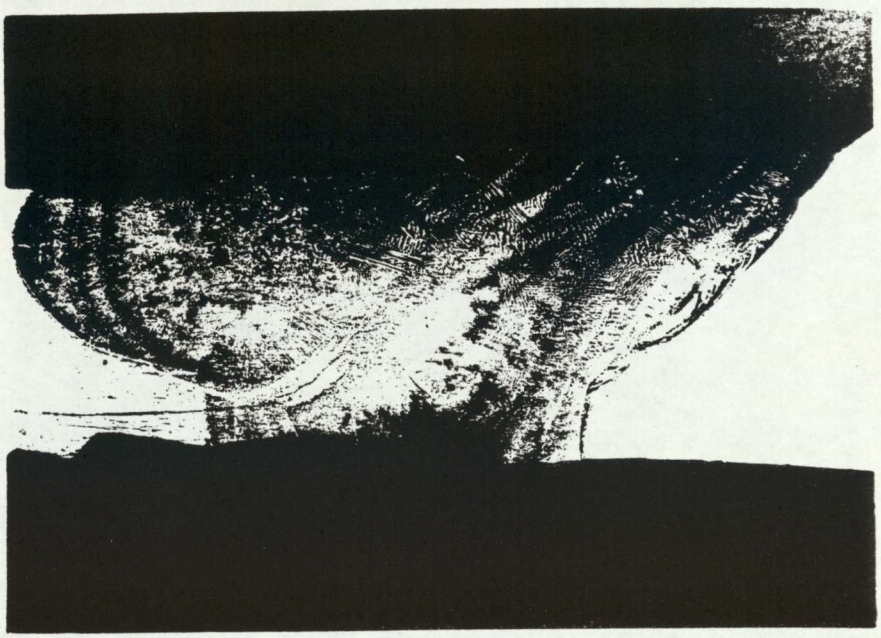

Figure 1. Magnification x 10.
Etchant: 10% Oxalic Acid (Electrolytic).

ADDITIONAL PRECAUTIONS TO ENSURE SOUND INCOLOY 800 WELDS

GENERAL

1. ENSURE PREPARATIONS DEGREASED THOROUGHLY BEFORE WELDING.

2. CLEAN FILLER WIRE WITH EMERY AND DEGREASE PRIOR TO WELDING.

3. FILLET WIRE MUST BE ADDED CONTINUOUSLY DURING WELDING, EVEN DURING THE RUN DOWN.

4. IF THE FILLER WIRE IS REMOVED FROM GAS COVER, THE FOLLOWING MUST BE OBSERVED.

   (A) WELDING MUST STOP.

   (B) OXIDISED FILLER WIRE MUST BE REMOVED BY CUTTING.

   (C) STOP POSITION MUST BE MECHANICALLY CLEANED.

5. INTERPASS TEMPERATURE MUST BE MAINTAINED. COOLING TO BELOW 100°C IS ESSENTIAL AT THE END OF EACH PASS, I.E. 6 O'CLOCK TO 12 O'CLOCK FOR THE SOCKOLET TO SPOOL AND PIGTAIL TO SOCKOLET (FILLET WELD) AND AFTER ONE COMPLETE CIRCUMFERENTIAL PASS FOR THE SPOOL TO PIGTAIL.

6. A PYROMETER NOT TEMPILSTIK CRAYONS MUST BE USED TO MEASURE INTERPASS TEMPERATURES.

APPENDIX 10.4

Vaporax Steam Generator

Wanson Company Ltd is one of the leading British Companies in industrial process and space heating. The Company is part of the international Wanson organization which has for many years manufactured a full range of modern packaged boiler plant, of both the shell and tube design, and of the once-through coil-tube design.

The range and quality of the products offered by Wanson have established for the company an enviable and long-standing reputation.

Vaporax Steam Generators

Vaporax is a forced circulation once-through steam generator and is the result of many years progressive development of the coil-tube principle of construction, resulting in a sound balance of high efficiency and simplicity of design. Vaporax steam generators ensure low cost steam raising for a moderate investment, operating automatically, following a simple manual start-up sequence, and burning fuel only as and when steam is required. Compactness and low weight save on installation costs. With the forced circulation once-through coil-tube design, full steam pressure may be attained in as little as three minutes from a cold start.

Output range – Vaporax steam generators are available in 11 sizes with steam outputs of 150 kg/h to 5000 kg/h (331 to 11023 lb/h). *Pressure* – Vaporax is available in three standard pressure ranges: 10, 15 and 20 bars (145, 218, 290 p.s.i.g.). Units for higher pressures are available to special order. *Standards* – Vaporax complies with current boiler regulations. The approval of Lloyds and other classification societies is obtained for marine use. *Fuels* – The matched Wanson burners fitted to all units are suitable for light and heavy fuel oils (depending on unit size), and for natural, towns and LPG. A dual-fuel capability is offered on larger units.

Cutaway of typical Vaporax steam generator shows return-flame high efficiency combustion principle

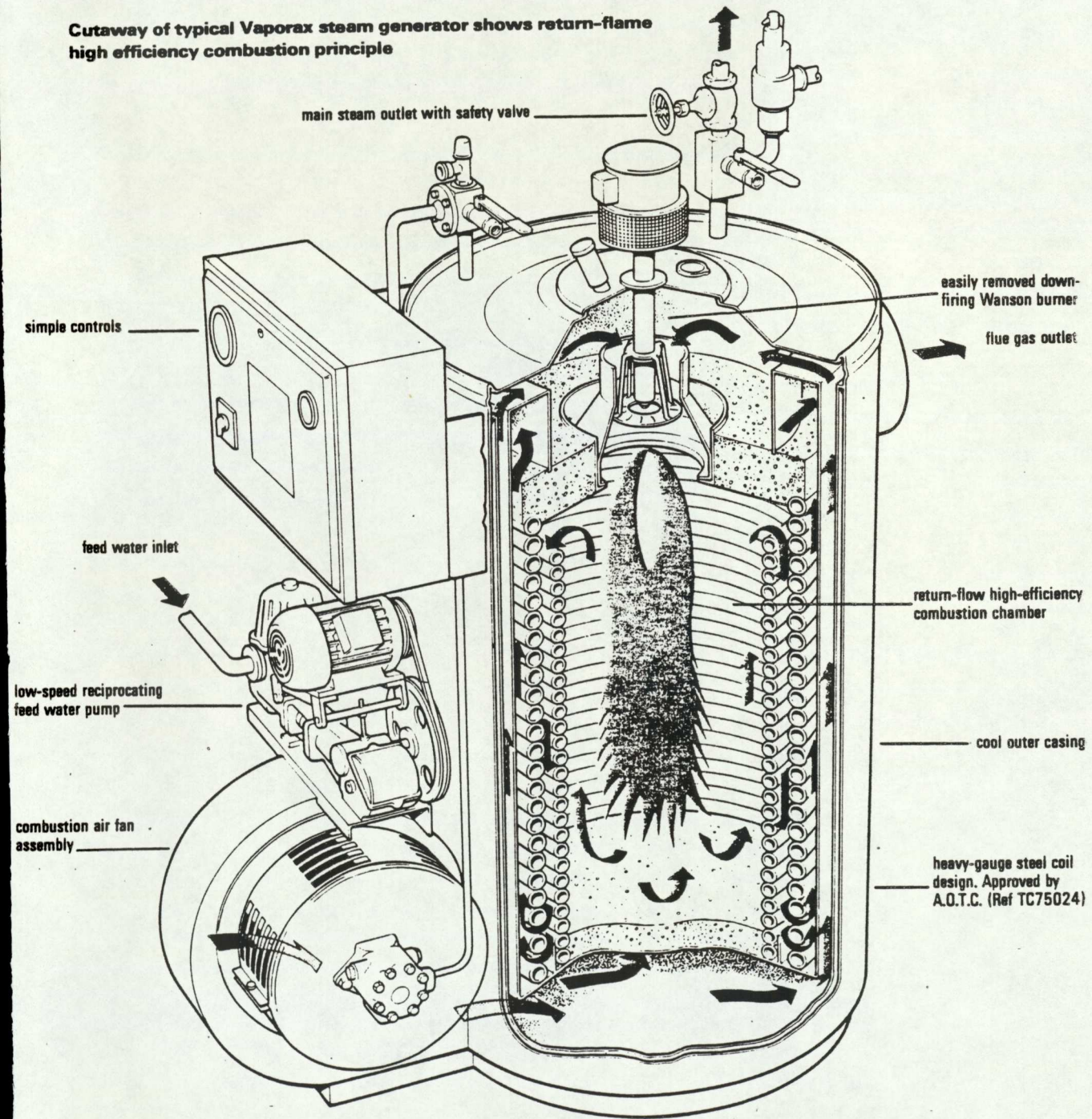

APPENDIX 10.5

Superheater Tube Design Program

(1) TOTAL SUPER HEATER TUBE LENGTH = 3Ø.84 H
(2) TUBE NOMINAL BORE = 1.25 INS.
(3) TUBE OUTSIDE DIAMETER = 1.66 INS.
(4) TUBE WALL THICKNESS = 0.14 INS.
(5) TUBE PRESSURE = 2BARS ABS.
(6) INLET TEMPERATURE = 12Ø.2 C
(7) OUTLET TEMPERATURE = 8ØØ C
(8) INLET ENTHALPY = 27Ø7 KJ/KG
(9) OUTLET ENTHALPHY = 4157.8 KJ/KG
(10) OUTLET SPECIFIC VOLUME = 2.4754M^3/K6G
(11) TEMPERATURE GRADIENT = 38.88Ø4Ø7 C

THE FOLLOWING PROPERTIES
OF STEAM AT 459

(12) SPEC. HEAT CAPACITY = 2.11 KJ/KG.K
(13) DYN. VISCOSITY = 2.68E-Ø5 N.S/M^2
(14) THERMAL CONDUCTIVITY = .Ø624 W/M.K

(15) DYN. VISCOSITY OF STEAM AT THE
TUBE WALL TEMP. OF 498 C = 2.84E-Ø5 N.S/M^2

(16) FOR A RE.NO. = 26417
THE VALUE OF JH = 86

THE AVERAGE TUBE TEMPERATURE ATTAINED
IN THE SUPERHEATER = 498 C
AND THE RESISTIVITY OF THE TUBE AT THIS
TEMPERATURE = 1.195E-Ø6 (OHM / M)
THE TOTAL POWER DRAWN FROM THE
TRANSFORMER = 71934.757 WATTS AND THE MAXIMUM
TUBE TEMPERATURE = 838.88Ø4Ø8 C

PRINT OUT FOR SUPERHEATER DESIGN

```
]LIST

10  HOME
20  PRINT "PIPE O.D.(INS) "
30  PRINT "DEFAULT VALUE = ";D
40  PRINT ""
50  INPUT "$= ";D$
60  IF  LEN (D$) = 0 GOTO 80
70 D =  VAL (D$)
80  PRINT ""
90  PRINT "WALL THICKNESS (INS) "

100  PRINT "DEFAULT VALUE = ";T
110  PRINT ""
120  INPUT "$= ";T$
130  IF  LEN (T$) = 0 GOTO 150
140 T =  VAL (T$)
150  PRINT ""
160  PRINT "WORKING PRESSURE(BARS
     G) "
170  PRINT "DEFAULT VALUE = ";P
180  PRINT ""
190  INPUT "$= ";P$
200  IF  LEN (P$) = 0 GOTO 220
210 P =  VAL (P$)
220  PRINT ""
230 S = 1.1 * (P - 1) * 14.5 * D /
     (2 * T)
240  PRINT "STRESS IN PIPE (PSI)=
     ";S
250  PRINT "CONTINUE (Y/N)": GET
     Z$
260  IF Z$ = "Y" GOTO 280
270  GOTO 10
280  PRINT ""
290  PRINT "INLET TEMPERATURE(DEG
     .C) "
300  PRINT "DEFAULT VALUE = ";T1
310  PRINT ""
320  INPUT "$= ";T$
330  IF  LEN (T$) = 0 GOTO 350
340 T1 =  VAL (T$)
350  PRINT ""
360  PRINT "OUTLET TEMPERATURE(DE
     G.C)"
370  PRINT "DEFAULT VALUE = ";T2
380  PRINT ""
390  INPUT "$= ";T$
400  IF  LEN (T$) = 0 GOTO 420
410 T2 =  VAL (T$)
420  PRINT ""
430 T3 = (T1 + T2) / 2
431  PRINT "TUBE TEMPERATURE(DEG
     C)"
433  PRINT "DEFAULT VALUE=";T5
434  PRINT ""
435  INPUT "$=";T$
```

```
436  IF  LEN (T$) =-0- GOTO- 438
437 T5 =  VAL (T$)
438  PRINT ""
440  PRINT "STEAM ENTHALPY AT INL
     ET (KJ/KG)"
450  PRINT "DEFAULT VALUE = ";H1
460  PRINT ""
470  INPUT "$= ";H$
480  IF  LEN (H$) = 0 GOTO 500
490 H1 =  VAL (H$)
500  PRINT ""
510  PRINT "STEAM ENTHALPY AT OUT
     LET (KJ/KG)"
520  PRINT "DEFAULT VALUE = ";H2
530  PRINT ""
540  INPUT "$= ";H$
550  IF  LEN (H$) = 0 GOTO 570
560 H2 =  VAL (H$)
570  PRINT ""
580  PRINT "STEAM MASS FLOW RATE(
     KG/HR)"
590  PRINT "DEFAULT VALUE = ";W
600  PRINT ""
610  INPUT "$= ";W$
620  IF  LEN (W$) = 0 GOTO 640
630 W =  VAL (W$)
640  PRINT ""
650  PRINT "AVERAGE STEAM TEMPERA
     TURE(DEGC)=";T3
660  PRINT ""
670  PRINT "AVERAGE DENSITY (KG/M
     ^3)"
680  PRINT "DEFAULT VALUE = ";D1
690  PRINT ""
700  INPUT "$= ";D$
710  IF  LEN (D$) = 0 GOTO 730
720 D1 =  VAL (D$)
730  PRINT ""
740 H3 = (W / 3600) * (H2 - H1)
750  PRINT "HEAT TO STEAM (KW)=";
     H3
760  PRINT ""
770  PRINT "RESISTIVITY VALUE (MI
     CRO OHM M))"
780  PRINT "DEFAULT VALUE = ";R1
790  PRINT ""
800  INPUT "$= ";R$
810  IF  LEN (R$) = 0 GOTO 830
820 R1 =  VAL (R$)
830  PRINT ""
840  GOTO 920
850 R1 = 111 + (6 / 111) * (T3 -
     316)
860  GOTO 920
870 R1 = 117 + (3 / 111) * (T3 -
     427)
880  GOTO 920
890 R1 = 120 + (4 / 111) * (T3 -
     538)
900  GOTO 920.
910 R1 = 124 + (2 / 111) * (T3 -
     649)
920  PRINT "RESISTIVITY VALUE(MIC
     RO OHM M)=";R1
930 A = (3.1416 / 4) * (D ^ 2 - (
     (D - (2 * T)) ^ 2)) * (.0254
     ^ 2)
```

```
436  IF  LEN (T$) =-0 GOTO 438
437 T5 =  VAL (T$)
438  PRINT ""
440  PRINT "STEAM ENTHALPY AT INL
     ET (KJ/KG)"
450  PRINT "DEFAULT VALUE = ";H1
460  PRINT ""
470  INPUT "$= ";H$
480  IF  LEN (H$) = 0 GOTO 500
490 H1 =  VAL (H$)
500  PRINT ""
510  PRINT "STEAM ENTHALPY AT OUT
     LET (KJ/KG)"
520  PRINT "DEFAULT VALUE = ";H2
530  PRINT ""
540  INPUT "$= ";H$
550  IF  LEN (H$) = 0 GOTO 570
560 H2 =  VAL (H$)
570  PRINT ""
580  PRINT "STEAM MASS FLOW RATE(
     KG/HR)"
590  PRINT "DEFAULT VALUE = ";W
600  PRINT ""
610  INPUT "$= ";W$
620  IF  LEN (W$) = 0 GOTO 640
630 W =  VAL (W$)
640  PRINT ""
650  PRINT "AVERAGE STEAM TEMPERA
     TURE(DEGC)=";T3
660  PRINT ""
670  PRINT "AVERAGE DENSITY (KG/M
     ^3)"
680  PRINT "DEFAULT VALUE = ";D1
690  PRINT ""
700  INPUT "$= ";D$
710  IF  LEN (D$) = 0 GOTO 730
720 D1 =  VAL (D$)
730  PRINT ""
740 H3 = (W / 3600) * (H2 - H1)
750  PRINT "HEAT TO STEAM (KW)=";
     H3
760  PRINT ""
770  PRINT "RESISTIVITY VALUE (MI
     CRO OHM M))"
780  PRINT "DEFAULT VALUE = ";R1
790  PRINT ""
800  INPUT "$= ";R$
810  IF  LEN (R$) = 0 GOTO 830
820 R1 =  VAL (R$)
830  PRINT ""
840  GOTO 920
850 R1 = 111 + (6 / 111) * (T3 -
     316)
860  GOTO 920
870 R1 = 117 + (3 / 111) * (T3 -
     427)
880  GOTO 920
890 R1 = 120 + (4 / 111) * (T3 -
     538)
900  GOTO 920
910 R1 = 124 + (2 / 111) * (T3 -
     649)
920  PRINT "RESISTIVITY VALUE(MIC
     RO OHM M)=";R1
930 A = (3.1416 / 4) * (D ^ 2 - (
     (D - (2 * T)) ^ 2)) * (.0254
     ^ 2)
```

```
940  PRINT "PIPE AREA ( M^2)=";A
950 R = R1 / A
960  PRINT "RESISTANCE PER  M (OH
     M/M)=";R
970 A1 = 3.1416 / 4 * ((D - (2 *
     T)) ^ 2) * (.0254 ^ 2)
980  PRINT "INSIDE AREA (M^2)=";A
     1
990 V1 = (W / 3600) / (D1 * A1)
1000  PRINT "VELOCITY IN PIPE (M/
     S)=";V1
1010  PRINT "THERMAL CONDUCTIVITY
      OF STEAM(W/M.K)"
1020  PRINT "DEFAULT VALUE = ";K
1030  PRINT ""
1040  INPUT "$= ";K$
1050  IF  LEN (K$) = 0 GOTO 1070
1060 K =  VAL (K$)
1070  PRINT ""
1080  PRINT "DYNAMIC VISCOSITY OF
      STEAM(KG/MS)"
1090  PRINT "DEFAULT VALUE = ";MU

1100  PRINT ""
1110  INPUT "$= ";M$
1120  IF  LEN (M$) = 0 GOTO 1140
1130 MU =  VAL (M$)
1140  PRINT ""
1150  PRINT "SPECIFIC HEAT CAPACI
     TY(J/KG.K)"
1160  PRINT "DEFAULT VALUE = ";CP

1170  PRINT ""
1180  INPUT "$= ";C$
1190  IF  LEN (C$) = 0 GOTO 1210
1200 CP =  VAL (C$)
1210  PRINT ""
1220 RE = (D1 * V1 * (D - (2 * T)
     ) * .0254) / MU
1230  PRINT "REYNOLDS NUMBER (RE)
      =";RE
1240 PR = (MU / K) * CP
1250  PRINT "PRANDTL NUMBER (PR)
     =";PR
1260 H4 = .0234 * (RE ^ .8) * (PR
      ^ .4) * (K) / ((D - (2 * T)
     ) * .0254)
1270  PRINT "HEAT TRANSFER COEFFI
     CIENT(H4)=";H4
1272 H5 = H4 * 3.142 * (D - (2 *
     T)) * .0254 * (T5 - T3) / 10
     00
1274  PRINT "HEAT FROM TUBE TO ST
     EAM =";H5
1275 L = H3 / H5
1276  PRINT "LENGTH FOR HEAT TRAN
     SFER=";L
1280  PRINT "TUBE LENGTH PER LEG(
     TL)"
1290  PRINT "DEFAULT VALUE = ";TL

1300  PRINT ""
1310  INPUT "$= ";T$
1320  IF  LEN (T$) = 0 GOTO 1340
1330 TL =  VAL (T$)
```

```
1340  PRINT ""
1350 TR = (TL * R) / 2
1360  PRINT "TOTAL RESISTANCE(TR)
     =";TR
1370 V2 = (H3 * 1000 * TR) ^ .5
1380  PRINT "VOLTAGE(V2)=";V2
1390  PRINT ""
1400  PRINT ""
1410  PRINT "DO YOU WANT TO CONTI
     NUE (Y/N)": GET A$
1420  IF  LEFT$ (A$,1) = "Y" THEN
      GOTO 10
1430  PRINT "END"

]PR£0
```

APPENDIX 10.6

Transformer: Scott Connection Detail

1.0 Scott connection

The Scott connection is one employed for three-to two-phase transformation or vice versa, and generally its winding characteristics are similar, as regards mechanical rigidity, to the star/star connection. On the three-phase side a neutral point is available for earthing or for loading. On the two-phase side the windings may be connected to give a three-wire supply or four-wire supply as desired. The halves of the winding of the main transformer on the three-phase side must be interlaced, in order to avoid excessive reactance. Due to the internal power factor on the three-phase side even at unity power factor load, two single-phase units forming a Scott connection can only give an output of $\sqrt{3/2}$ of their combined single-phase kVA rating.

Small third-harmonic currents and voltages exist with this connection, but as a rule they are negligible.

1.1 Advantages

(1) Where a number of units are installed in a system the interchangeable unit can be employed to act as a spare for either the main or teaser in the event of a winding failure.

(2) Winding characteristics are similar to those of the star/star connection.

(3) On the three-phase side a neutral point is available for earthing or for loading.

(4) On the two-phase side the windings may be connected to give a two-three or four-wire supply.

1.2 Disadvantages

(1) The internal power factor on the three-phase side even at unity power factor load only permits a loading of the two single-phase units to 3/2 of their combined rating.

(2) No delta connection is available for the circulation of third-harmonic currents.

1.2 Disadvantages - (cont'd)

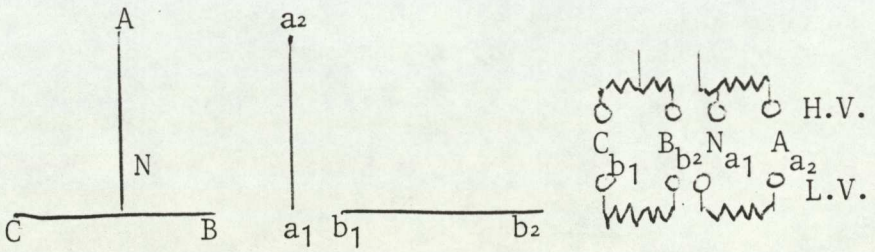

H.V. L.V.

Scott connection

(3) The separate halves of the main windings on the three-phase side must be interleaved to minimise leakage reactance effects, resulting in a degree of winding complication.

(4) The inherent single-phase construction and characteristics of this connection produce a comparatively bulky and a heavier transformer than compared with a normal three-phase transformer of the same rating.

1.3 Applications

(1) For supplying two-phase or single-phase loads from three-phase systems or vice versa.

(2) For inter-connecting three-phase and two-phase systems.

FOSTER WHEELER POWER PRODUCTS LIMITED

Research & Development Department

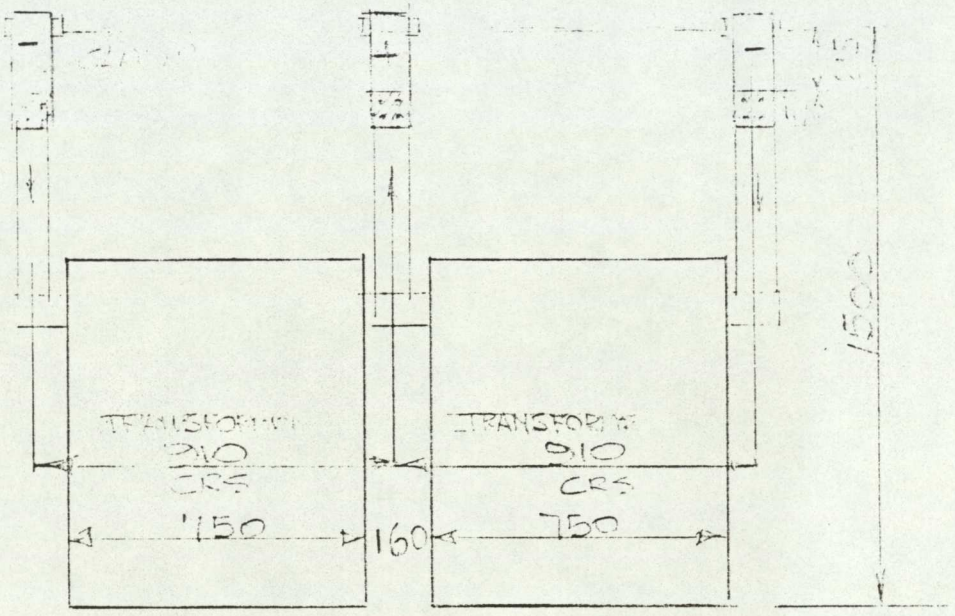

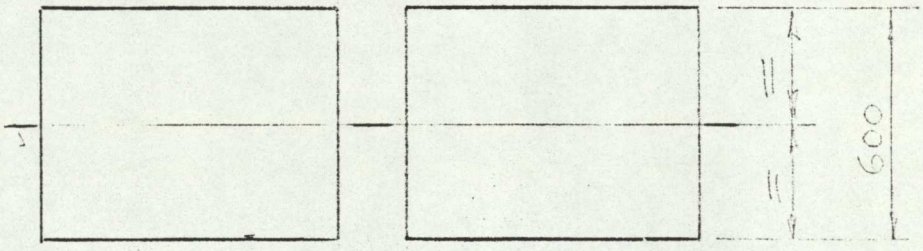

PLAN.

					DRG. NO. RD695 - SH2			
REV.	DATE	BY	ALTERATION	CHD.	DATE 26/2/81	DRN.	CHD.	

Admel P/1/663

APPENDIX 11.1

BIOMASS - HEAT LOSS FROM SAMPLE TUBE

1.0 Introduction

This calculation relates to the examination of one of the gas sample nozzles in relation to lining versus heat loss. The nozzle is similar to that shown in Figure 11.4.

2.0 Convection Losses

Outer skin temp = 300 C (Max assumed)
Air temp = 25 C (Hot day)
Film temp = (300 + 25)/2 = 162.5 C = 435.5 K

From Table A5 [Heat Transfer by Holman] at T = 435.5 K

$K = 0.03608$ W/m C
$V = 28.002 \times 10^{-6}$ m^2/s
$Pr = 0.6847$

For estimation purposes simplified equations for air convection Table 7-2 page 253.

Considering first half of nozzle upstand, Figure 11.4, 200 mm.

(Laminar flow) $h = 1.42\ (\Delta T/2)^{.25}$ or (Turbulent flow) $h = 0.95\ (\Delta T)^{.33}$

$h = 8.65$ W/m^2 C or $h = 6.18$ W/m^2 C
assume worst case which is: $h = 6.18$ W/M^2 C

For $\Delta T = 275$ C $h = 1.69$ KW/m^2

3.0 Losses due to radiation

Colder temp = 25 C = 77 F = t_2
Warm temp = 300 C = 572 F = t_1

$T_2 = 537$ R
$T_1 = 1032$ R

$h_r/\varepsilon_r = 0.173\ [(T_1/100)^4 - (T_2/100)^4]/(t_1 - t_2)$

$= 0.173\ \{[(537/100)^4 - (1032/100)^4]\}/(572 - 77)$

$h_r/\varepsilon_r = 3.67$ Btu's/ft^2 hr F

$= 3.67 \times 5.6783$ W/m^2 C

Assume $\varepsilon = 0.9$ (Emissivity of surface)

$h_r = (0.9 \times 3.67 \times 5.6783)$

for $\triangle T = 275$ C

$h_r = 5.16$ KW/m^2

Sum of radiative and convective losses = 6.75 KW/m^2

Diameter of tube = 60 mm

Total heat loss = $Q = h/A$

$= 6.73 \times 10^3 \times \pi \times .060$

$= 1.27$ KW 1 m = 0.254 KW

APPENDIX 11.2

Calculations for Orifice Plates in Product Gas Line

11.0 Calculations for Orifice Plates in Product Gas Line

Flange Type = Square Edged. Design to BS 1042 Part 1, 1964

Specification for Plate:
Clause 64, P.123
Specification for Pressure Tapping:
Clause 65, P.123 with reference to Appendix B, Page 168.

11.1.1 Calculation for Orifice Plate in Steam Line

Maximum Flow = 353 lb/hr
Minimum Pressure = 29 psi
Density of steam at saturated pressure
= 0.07042 lb/ft^3
ts = 120.2 C (Reference to Table 5, P.43)
Upstream device should be no less than:
ts = 120.2 C = 248 F = 707.7 R
Maximum allowable head loss= 5.5 x Upstream Pressure
= 5.5 x 29
= 159.5" H_2O
Internal diameter of 1 in NB 40 Pipe = 1.049 in
$N = \text{Max. Flow } (W) / [359.2 \times D^2 \times (hp)^{0.5}]$
$N = 353 / [359.2 \times 1.049^2 \times (1595 \times 0.07042)^{0.5}]$
N = 0.2665
Assume CME = N
From Figure 3 M = 0.39
From Figure 35 C = 0.605
CME = N
CME = 0.2665
ME = 0.2665/C
ME = 0.4405
From Appendix J
d/D = 0.634 E = 1.0925
since D = 1.049
d = 0.665 in

11.1.2 Determination of Pressure Drop across the Device

Minimum Flow = 88 lb/hr

Maximum Pressure = 290 psi

From Table 16 290 psi = 0.0019 poise

Density of steam at sat. temp. 0.6259 lb/ft^3

d/D = 0.634 M = 0.39

C = 0.605

E = $1/(1 - M^2)^{0.5}$

E = $1/(1 - 0.39^2)^{0.5}$

= 1.08599

Rd = $W/15.8\ D\ (M)^{0.5}$

= $88/[15.8 \times 0.0019 \times 1.049 \times (0.39)^{0.5}]$

= 88/0.01966611

Rd = 4474

From Figure 41 Z = 1.016

Assume H = 50" H_2O

L/P = 50/290 = 0.1724

From Figure 39 E = 0.997

From Figure 35 M = 0.39

Z_R = 1.05 ZD = 1.019

Z = Z_R x ZD = 1.06995

CME = N/Z x e = 0.2665/1.06995 x 0.997

= 0.25

From Figure 3, M = 0.38 and C = 0.605

ME = CME/C = 0.249826539/0.605

ME = 0.41

d/D = 0.618 d = 0.618 x 1.049

= 0.648282 in

Orifice Plate d = 0.648 in (Improved Value)

N = W

= $359.2 \times D^2 \times (h)^{0.5}$

h = $(88/359.2 \times 1.049^2 \times 0.2665)^{0.5}$

In this case the drop across the orifice

= 0.914 in H_2O

APPENDIX 11.3

Blower Vessel Design Calculations

1.0 BLOWER VESSEL

Design code: ASME VIII DIV I
Design pressure 32 bar (464 psig) at 200 C.
Dye penetrant or spot radiography where possible.

Material shell and nozzles ASTM 106 641B. Design stress 15,000 psi.

1.1 Shell

Construction: 18 in O/D seamless pipe

$$t = \frac{464 \times 9.0}{15{,}000 + 0.4 \times 464} = 0.275 \text{ in} + 0.500 \text{ in min}$$

0.0625 Corrosion allowance
0.3375 < 0.438

Shell from seamless A106 Grade B 18 in O/D x 0.500 in WT

1.2 Branches

Construction: 4 in NB 4.5 O/D

$$t = \frac{464 \times 2.25}{15{,}000 + 0.4 \times 464} = 0.07 \text{ in} +$$

0.0625 Corrosion allowance
0.1325

Minimum thickness Sch 40 less tolerance + CA 0.237 in minimum 0.207 +

0.0625
0.2695

Sch 50 = 0.337 in minimum 0.295
Nozzles 4 in NB Seamless A106 Grade B Sch 80

1.3 Reinforcement of Nozzles

Area required 3.95x0.275 = 1.09 mm^2
Area provided by shell (0.438-0.3375) 3.951 = 0.397 mm^2
Area provided by nozzle 5(0.337-0.1325)0.2745
= 0.2807 mm^2

Area provided by nozzle 2(0.2745-0.0625)0.7249

= 0.3073 mm^2

Area provided by external weld 0.375 x 0.375

= 0.1406 mm^2

Area provided by internal weld 0.25 x 0.25 = 0.0625 mm^2

Area available as reinforcing = 1.188 mm^2 This is greater than the required area of 1.09 mm^2. Therefore no further reinforcing necessary.

1.4 Hydrostatic Test

a) Maximum allowable Working Pressure (cold and new)

$$P = \frac{15{,}000 \times 0.438}{9.0 - 0.4 \times 0.438} = 744.5 \text{ psig or } 51 \text{ bar g}$$

b) Flanges: 1100 psig or 75.8 bar g

Hydro test required by ASME 48 bar g

APPENDIX 13.1

Determination of Type and Extent of Zone

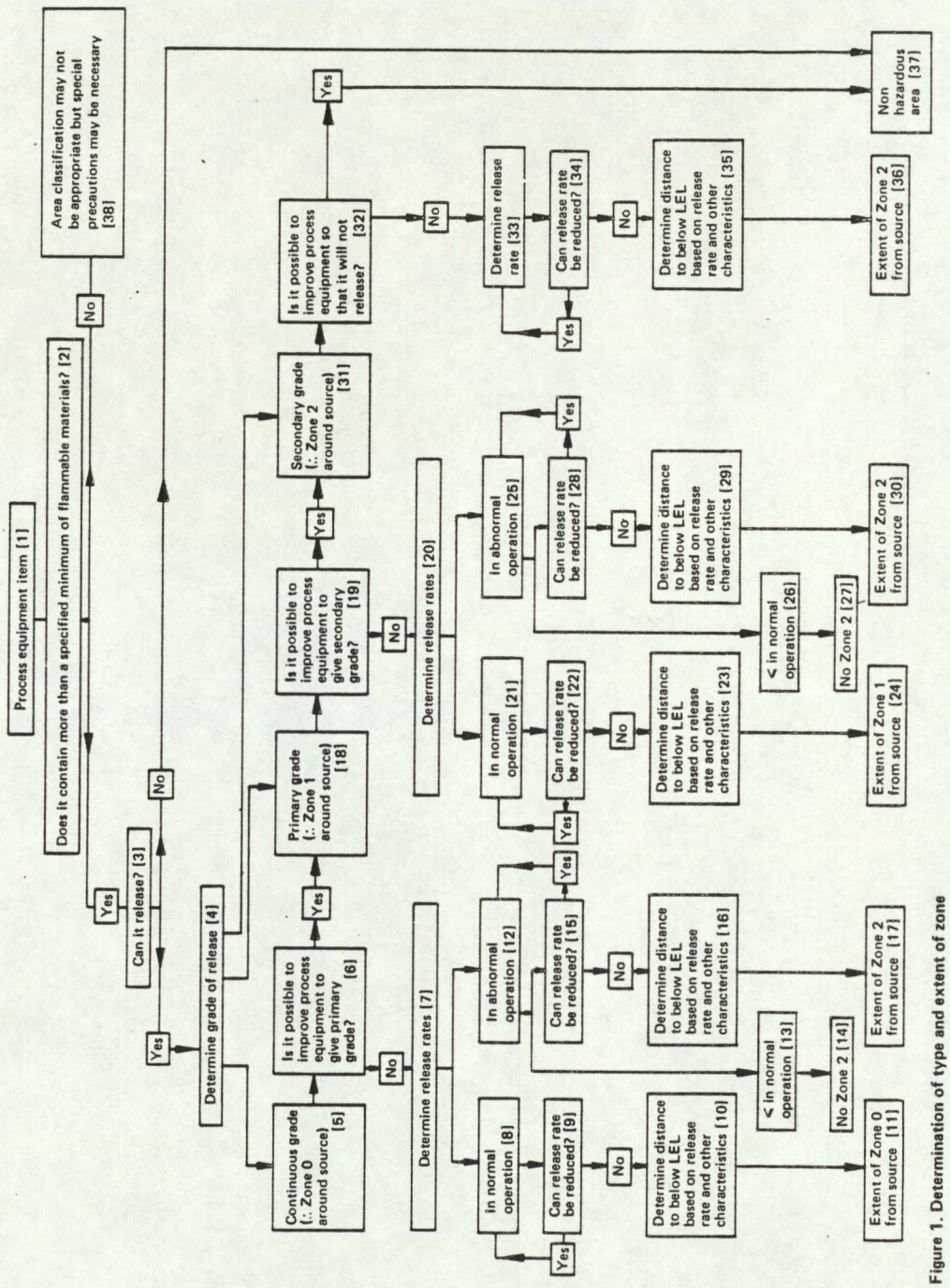

Figure 1. Determination of type and extent of zone

Appendix 15.1

Equipment and Sub-contract Costs

FOSTER WHEELER POWER PRODUCTS LTD 8-86-04801

PURCHASE OF DURABLE EQUIPMENT (HARTLEPOOL WORKS ORDERS)

FOR PERIOD AUGUST 1981 - JANUARY 1982

TYPE OF EQUIPMENT	DATE OF PURCHASE	SUPPLIER	AMOUNT
Chipboard	12.8.81	James Graham & Co.	4.43
Stainless Seamless tubes	25.9.81	Sandvik Ltd.	484.69
Tellus Oil	16.9.81	Shell UK Oil Ltd.	104.32
Threadolets	21.9.81	Vyverm Ltd.	92.60
"	18.9.81	"	10.52
"	30.9.81	"	12.64
R.F. Bunds	7.10.81	"	17.52
Ermetor	11.9.81	Crossling Ltd.	291.00
"	18.9.81	"	5.36
Worktop	23.9.81	Focus Home Centres	17.35
150 lb Sorf	18.9.81	Flanges Ltd.	34.62
Rings	18.8.81	Henry Gallagher Ltd.	9.96
Screws	31.8.81	C. Dickens Foodstores	6.57
Elapsed time Indicator	18.9.81	Westeen Instrument Centre	51.35
Eng. Studs & Nuts	21.9.81	GKN Distributors Ltd.	5.16
"	24.9.81	"	3.88
Washers, Studs & Nuts	18.9.81	"	46.73
Sockets	9.9.81	Impact Socket Supplies	42.12
Sockets	21.9.81	Airtools	50.48
Pipe & Clips	12.8.81	J.T. Atkinson & Sons Ltd.	7.80
Threadolets	2.10.81	Wyvern Ltd.	14.78
Tube	21.10.81	"	21.80
Tube	8.10.81	"	5.36
Tube & Threadoletes	12.10.81	"	72.74
Equal Tees & Threadoletes	14.10.81	"	38.31
Springs	13.10.81	West Bromwich Spring Co. Ltd	90.20
B/W Fittings Incoloy 800	29.10.81	Spray Engineering Ltd	297.30
Film Scale New F/B	20.10.81	Platon Flowbits Ltd.	46.64
Model 16/200 Dial	22.10.81	The British Rototherm Co. Ltd	35.70
Ermeto	14.10.81	Crossling & Co. Ltd.	51.40
Various Heating Equipment	30.10.81	"	545.81
"	30.10.81	"	34.84
"	30.10.81	"	707.25
Ermeto	9.10.81	"	152.74
Sockets	5.11.81	"	6.34
Valve	22.10.81	Northvale Ltd.	82.50
Valve	14.10.81	"	202.50
Short Shank Pipe	7.10.81	J.T. Atkinson & Sons Ltd.	9.20
ICI Paints Goosewing	30.9.81	"	10.50
Fabricated Frame Support	30.9.81	Teeside Plate Proc. Ltd.	120.00
Coach Hire	30.9.81	Seaton Service Stn.	60.00
PSI	17.11.81	B.S.S.	135.15
Special Gases	26.9.81	B.O.C.	5.00
Special Gases	23.11.81	B.O.C.	5.00
Simplifix	30.9.81	Crossling & Co. Ltd.	29.40
		C/F.	£ 4,079.56

TYPE OF EQUIPMENT	DATE OF PURCHASE	SUPPLIER	AMOUNT
		B/F	£4,079.56
Test Certificate	5.11.81	Crossling & Co. Ltd.	10.00
Ermeto	19.11.81	"	5.96
Flange	17.11.81	"	9.05
Various	31.10.81	C. Dickens Toolstore	12.08
Screws, Plus plugs	31.10.81	"	2.07
Washers	26.11.81	GKN Distributors	15.22
5 ftw/Tube	30.11.81	T.E.P. Stores Ltd.	12.60
3000 lbs Threadoletes	3.11.81	Wynvern Ltd.	7.68
Blinds Weldoletes	27.11.81	"	61.24
Hydraulics tube, Ermeto	21.10.81	Crossling & Co. Ltd.	25.45
Various	21.10.81	"	91.69
	16.12.81	"	(25.45)
Benols, Couplers, Stop ends	9.12.81	A. Newey & Eyre Ltd.	35.56
Various	23.11.81	T.E.P. Stores Ltd.	174.43
T/Couple probe	18.1.82	B.I.C. Pyrotenax Ltd.	18.33
Special gases	21.1.82	B.O.C.	5.00
Ermeto	19.1.82	Crossling & Co. Ltd.	3.27
Flanges	7.1.82	"	76.38
Weldolet	23.11.81	"	5.71
Ermeto	13.1.82	"	34.35
Ermeto	7.1.82	"	10.74
300 lb WNRF Orifice	9.2.82	Flanges Ltd.	137.10
400 mm & 50 mm R/Fs Bossed	14.1.82	Flanges Ltd.	50.70
170 X 30 HRH	25.1.82	Gladestone Ltd.	6.92
Sight Glass Circle	22.1.82	Glass of Mark Ltd.	75.00
Various	6.1.82	A. Newey & Eyre Ltd.	37.62
	19.1.82	Gledson & Co. Ltd.	(35.56)
Studbolts	22.1.82	GKN Distributors Ltd.	50.00
Steel Eng. Studs	20.1.82	McLean, Duchanan, Wilson	20.11
2" sch 4045° LRWE	19.1.82	Wyvern Ltd.	7.36
Studs, Weldolet	18.1.82	"	15.57
		TOTAL	£5,035.74

FOSTER WHEELER POWER PRODUCTS LTD - 8-86-04801

PURCHASE OF DURABLE EQUIPMENT (London Office Purchase Orders)

FOR PERIOD AUGUST 1981 - JANUARY 1982

Type of Equipment	Date of Purchase	Supplier	Amount
Recycle Gas Blower etc.	27.8.81	Aerotech Eng. Ltd.	2,800.10
Level Control Valve	20.7.81	J. Blakeborough & Sons	799.38
Hopper Elec Unit Switch	27.8.81	Aerotech Eng. Ltd.	1,040.00
Char/Ash Removal System	30.6.81	Ajax Equipment Ltd.	2,223.00
Deltapi Transmitters	30.7.81	Kent Process Control Ltd.	1,088.00
Deltapi Transmitters	25.8.81	Kent Process Control Ltd.	3,401.00
Thermometer	3.8.81	Budenberg Guage Co. Ltd.	318.44
Stainless Steel Sleeves	15.9.81	Aerotech Eng. Ltd.	105.00
Thermocouples	5.10.81	ISA Controls Ltd.	793.00
Thermocouple units	4.9.81	BICC Pyrotenax Ltd.	624.90
Valves	14.9.81	COPPAS Controls Ltd.	72.97
Valves	4.9.81	COPPAS Controls Ltd.	428.36
Pressure & Differential Pressure Switches	11.9.81	Delta Controls Ltd.	1,830.50
Flow Switch	15.10.81	Krone Measurement & Con Ltd.	110.25
Vertical Positive Blower	15.6.81	Hick Hargreaves & Co Ltd.	792.00
Replacement pump	16.12.81	Castletree Engineering Ltd.	463.00
Materials - Labour	16.12.81	Plibrico Co. Ltd.	5,828.00
			£22,717.90

FOSTER WHEELER POWER PRODUCTS LTD - 8-86-04801

PURCHASE OF DURABLE EQUIPMENT (London Office Purchase Orders)

FOR PERIOD FEBRUARY 1981 - JULY 1981

Type of Equipment	Date of Purchase	Supplier	Amount
Control Valve & Instruments	18.3.81	J. Blakeborough & Sons Ltd	489.42
Ionisation Equipment	16.3.81	Hamworthy	250.00
Molochite	8.4.81	Anchor Chem. (UK) Ltd.	191.00
Pumps	18.3.81	PSL Engineering Ltd.	439.00
Hydraulic Power Unit & Motor	29.4.81	Slack & Parr	1,082.00
Sealing Glands	7.5.81	Gulton Europe Ltd.	206.55
Relief Valve Equipment	28.5.81	Bailey Valves Ltd.	311.00
Indicating Controller & Unit	1.7.81	Foxboro Yoxall	1,274.00
Relief Valve Equipment	8.4.81	Bailey Valves Ltd.	35.00
Level Transmitter & Switch	12.5.81	Masoneilam Ltd.	1,115.10
Valves, packings & Cylinder Repair Kits	11.6.81	De Zurich Int.	3,065.46
Venturi Scrubber System	22.4.81	Castletree Eng. Ltd.	6,944.00
Current to Air Converter	1.7.81	Foxboro Yoxall	208.00
			£15,610.53

FOSTER WHEELER POWER PRODUCTS LTD - 8-86-04801

PURCHASE OF DURABLE EQUIPMENT

TYPE OF EQUIPMENT	DATE OF PURCHASE	SUPPLIER	AMOUNT
PARTIAL OXIDATION REACTOR	30.4.82	SIMMONS & HAWKER LTD	3,480.00
SAMPLING SYSTEM, COILS	1.1.83	LOWE ENGINEERING	3,874.00
1¼" STEAM S/HTR ASSEMBLY	31.5.82	JAMES HOGG	2,727.00
			£10,081.00

FOSTER WHEELER POWER PRODUCTS LTD 8-86-04801

PURCHASE OF DURABLE EQUIPMENT (Hartlepool Works Orders)

FOR PERIOD FEBRUARY 1981 - JULY 1981

Type of Equipment	Date of Purchase	Supplier	Amount
Gaskets	9.3.81	Flexitallic Gaskets Ltd.	495.40
Glass column	24.3.81	Phase Sep. Ltd.	94.00
Disposable Pre-columns	27.3.81	Pye Unicam	22.50
Flowbits	31.3.81	Flowbits Ltd.	121.80
Studbolts & Nuts	26.3.81	GKN Distributors Ltd.	13.22
"	26.3.81	"	324.72
Incoloy 800	2.3.81	Philip Cornes & Co. Ltd.	186.66
Copper Bar	18.2.81	Delta	98.37
Hydraulic Tube Valve etc.	2.4.81	Crossling & Co. Ltd.	120.87
Nuts & Bolts	9.4.81	GKN Distributors Ltd.	24.14
Metal Block	27.4.81	Oxley Ltd.	56.27
Metal Block	23.4.81	"	48.00
Valves	8.4.81	Northern Valve Services	17.96
T Check Valve	2.4.81	Northvale	161.00
Electrical Parts	6.4.81	T.E.P. Stores (Hartlepool)	4.01
✓ Transformers	22.4.81	T.E.C. Ltd.	2,818.00
Servescribe	30.4.81	T.H.S. Industries	118.00
✓ Vaporax	9.4.81	Wanson Co. Ltd.	1,022.10
Metalflexes	6.4.81	James Walker & Co. Ltd.	2.60
Metalflexes	6.4.81	"	35.56
"	6.4.81	"	91.04
Ermeto	24.4.81	Crossling	642.28
Flanges	28.4.81	"	25.60
Stainless Steel tube	28.4.81	"	242.77
Blind Flange	30.4.81	"	33.73
Valves	30.4.81	"	17.88
Flange	30.4.81	"	65.32
Sockets, Tees etc.	16.4.81	"	84.90
Ermeto elbow	16.4.81	"	97.40
Various	11.5.81	"	760.35
Regulator	18.3.81	B.O.C.	140.00
Tank Cap	30.4.81	J.T. Atkinson & Son Ltd.	5.83
Socket, Nipple, Elbow	30.4.81	"	3.66
Fire cement	23.4.81	"	4.76
Various	30.4.81	"	233.38
Back nut & shroud	16.4.81	B.I.C.C.	4.40
Gland	13.4.81	"	12.90
PVC Tape & Sheath	14.4.81	"	184.18
Buffalo Ejectors	22.4.81	Green & Boulding Ltd.	52.60
500 lb Flange	27.4.81	Flanges Ltd.	27.10
Various	31.3.81	Eurotherm Ltd.	1,498.62
Various	2.6.81	B.S.S.	28.12
Hylug	7.5.81	B.I.C.C. - Burndy Ltd.	15.96
Gases	7.5.81	B.O.C.	182.90
Eliza Tinsley & Coil.	12.5.81	J.T. Atkinson & Son Ltd.	4.20
Eliza Tinsley & Consorts	30.4.81	J.T. Atkinson & Son Ltd.	34.73
PVC Cable	7.5.81	B.I.C.C.	23.90
Tube	9.6.81	Flanges Ltd.	233.20
		C/F.	10,537.39

Type of Equipment	Date of Purchase	Supplier	Amount
		B/F.	10,537.39
Valves	15.5.81	Crossling & Co. Ltd.	385.02
Flanges	15.5.81	"	27.13
Flanges	14.4.81	"	195.96
BLK WI Cross	18.5.81	"	5.60
Welds	6.5.81	"	66.99
Pens	15.5.81	Smiths Ind.	6.60
Stainless Seamless Tubes	8.6.81	Sandvik Ltd.	672.32
Metaflex	22.4.81	J. Walker & Co. Ltd.	60.17
Glass	24.6.81	EWM Ltd.	43.91
Various	1.5.81	T.E.P. Stores (Hartlepool) Ltd	5.57
Various	8.7.81	R.S. Components Ltd.	77.37
Steel Sheets	3.7.81	Oxley	1,464.35
"	22.6.81	Oxley	69.99
acer Ring	1.7.81	Flanges Ltd.	109.60
langes	17.6.81	Crossling & Co. Ltd.	127.55
"	1.6.81	"	13.84
Stainless Steel tube	22.5.81	"	36.77
Flanges	22.5.81	"	25.43
Valves	22.5.81	"	65.90
Ermetos	29.5.81	"	4.78
Ermeto Motor	29.5.81	"	48.24
Ermetos	29.5.81	"	80.12
Flanges	22.5.81	"	39.62
Special Gases	20.7.81	B.O.C.	4.60
Various	30.6.81	C. Dickens Toolstore	3.78
Heating Parts	13.4.81	Heating Rep. Pts. Ltd.	44.64
			14,223.24

FOSTER WHEELER POWER PRODUCTS LTD 8-86-04801

PURCHASE OF DURABLE EQUIPMENT (Hartlepool Works)

FOR PERIOD FEBRUARY 1981-JULY 1981

Type of Equipment	Date of Purchase	Supporting Documents	Cost
Kathometer Detector	22.5.81	See attached Pye Unicom Invoice	177.00
			£177.00

ACC/DWT/CT

FOSTER WHEELER POWER PRODUCTS LIMITED 8-86-04801

SUB-CONTRACT WORK TO SUPPORT FWPP INV. 3/5/83

CONTRACTOR & DESCRIPTION OF WORK	DATE OF WORK & INVOICE DETIALS	VALUE
WANSON COMPANY LTD		
MODEL 150 VAPORAX (85%)	36012 (19.3.81)	5,791.90
STEELFAB		
MILD STEEL SUPPORTING STRUCTURES	970 (3.5.81)	2,022.00
PECKSTON ENG. LTD		
BIOMASS REACTOR NO. 1 MATERIALS	1281 (30.4.81)	13,203.40
STEELFAB		
ADDITIONAL PIPE SUPPORT STRUCTURE	876 (6.6.81)	50.00
PHILIP CORNES & CO.		
6 off CORNES 15 ASTM B409 HOT ROLLED ANNEALED & DESCALED	CC1/54932 (13.5.81)	473.15
TEESSIDE PLATE PROCESSING LTD.		
STOIC GASIFIER UNIT	3105 (23.7.81)	720.00
I.C.I. LTD		
PHYSICS & RADIOSTORE SERVICES	OC 75/46309 (31.7.81)	1,710.00
WANSON COMPANY LTD		
ESCALATION ON VAPORAX	D 36192 (13.4.81)	158.08
PAGE SECTIONAL BLDGS. LTD		
ERECT SITE HUT	3625 (11.5.81)	375.00
CENTRAL DESIGN ET MODELLING SERVICES		
DRAUGHTING ASSISTANCE	w/e 8.2.81 - 5225 (8.8.81)	73.95
CENTRAL DESIGN & MODELLING SERVICES		
DRAUGHTING ASSISTANCE	w/e 15.2.81 - 5287 (15.2.81)	216.75
CENTRAL DESIGN & MODELLING SERVICES		
DRAUGHTING ASSISTANCE	w/e 28.2.81 - 5389 (28.2.81)	214.20
CENTRAL DESIGN & MODELLING SERVICES		
DRAUGHTING ASSISTANCE	w/e 8.3.81 -5460 (8.8.81)	193.80
CENTRAL DESIGN & MODELLING SERVICES		
DRAUGHTING ASSISTANCE	w/e 22.2.81 - 5329 (22.2.81)	122.40
CENTRAL DESIGN & MODELLING SERVICES		
DRAUGHTING ASSISTANCE	w/e 15.3.81 - 5036 (15.3.81)	99.45
CENTRAL DESIGN & MODELLING SERVICES		
DRAUGHTING ASSISTANCE	w/e 29.3.81 - 5666 (29.3.81)	109.65
CENTRAL DESIGN & MODELLING SERVICES		
DRAUGHTING ASSISTANCE	w/e 22.3.81 - 5592 (29.3.81)	114.75
CENTRAL DESIGN & MODELLING SERVICES		
DRAUGHTING ASSISTANCE	w/e 26.4.81 - 6692 (3.5.81)	25.50
CENTRAL DESIGN & MODELLING SERVICES		
DRAUGHTING ASSISTANCE	w/e 7.6.81 - 7776 (7.6.81)	124.95
CENTRAL DESIGN & MODELLING SERVICES		
DRAUGHTING ASSISTANCE	w/e 24.5.81 - 6889 (24.5.81)	51.00
CENTRAL DESIGN & MODELLING SERVICES		
DRAUGHTING ASSISTANCE	w/e 17.5.81 - 6855 (24.5.81)	17.85
CENTRAL DESIGN & MODELLING SERVICES		
DRAUGHTING ASSISTANCE	w/e 5.7.81 - 7956 (5.7.81)	53.20
CENTRAL DESIGN & MODELLING SERVICES		
DRAUGHTING ASSISTANCE	Increase in Rates - 7853 (21.6.83)	43.00
CENTRAL DESIGN & MODELLING SERVICES		
DRAUGHTING ASSISTANCE	w/e 14.6.81 - 7933 (14.6.83)	186.15
CENTRAL DESIGN & MODELLING SERVICES		
DRAUGHTING ASSISTANCE	w/e 21.6.81 - 7866 (21.6.83)	25.20
FOSTER WHEELER ENERGY LTD		
TECHNICAL ASSISTANCE	w/e 13.3.81 - 04/139/81 (13.4.81)	447.98
		£26,623.31

FOSTER WHEELER POWER PRODUCTS - 8-86-04801

SUB-CONTRACT WORK TO SUPPORT FWPP INV 5/5/82

CONTRACTOR & DESCRIPTION OF WORK	DATE OF WORK & INVOICE DETAILS	VALUE
ANGLO-SWEDISH ENGINEERING MANUFACTURE ONE REACTOR VESSEL	1386 (28.8.81)	5,730.00
ANGLO-SWEDISH ENGINEERING. CREDIT NOTE NO 1386	29 (29.1.82)	(530.00)
ANGLO-SWEDISH ENGINEERING. SUPPLY OF MATERIAL/MANUFACTURE ONE BIOMASS REACTOR NO. 1	1412 (29.9.81)	19,467.00
ANGLO-SWEDISH ENGINEERING CREDIT NOTE ON 1412	28 (29.1.82)	(305.00)
CENTRAL DESIGN & MODELLING SERVICES DRAUGHTING ASSISTANCE	w/e 23.8.81 Inv 7059 (23.8.81)	12.75
CENTRAL DESIGN & MODELLING SERVICES DRAUGHTING ASSISTANCE	w/e 16.8.81/23.8.81 Inv 7096 (30.8.81)	1.25
CENTRAL DESIGN & MODELLING SERVICES DRAUGHTING ASSISTANCE	w/e 6.9.81 Inv 7128 (6.9.81)	25.20
CENTRAL DESIGN & MODELLING SERVICES DRAUGHTING ASSISTANCE	w/e 20.9.81 Inv 7228 (20.9.81)	165.20
CENTRAL DESIGN & MODELLING SERVICES DRAUGHTING ASSISTANCE	w/e 13.9.81 Inv 7194 (13.9.81)	67.20
CENTRAL DESIGN & MODELLING SERVICES DRAUGHTING ASSISTANCE	w/e 1.11.81 Inv 7433 (1.11.81)	44.80
CENTRAL DESIGN & MODELLING SERVICES DRAUGHTING ASSISTANCE	w/e 18.10.81 Inv 7649 (18.10.81)	204.40
CENTRAL DESIGN & MODELLING SERVICES DRAUGHTING ASSISTANCE	w/e 25.10.81 Inv 7520 (25.10.81)	33.60
CENTRAL DESIGN & MODELLING SERVICES DRAUGHTING ASSISTANCE	w/e 11.10.81 Inv 7585 (11.10.81)	8.40
	TOTAL	£24,924.80

ACC/ADS/CT

FOSTER WHEELER POWER PRODUCTS LTD 8-86-04801

SUB-CONTRACT WORK FOR PERIOD AUGUST 1980 TO JANUARY 1981

Contractor & Description of Work	Date of Work & Invoice Details	Value
Control Design & Modelling Services Draughting Assistance	W/E. 2.11.80 Inv. 3933	38.25
" " " "	W/E. 9.11.80 Inv. 3939	114.75
" " " "	W/E. 7.12.80 Inv. 3978	175.95
" " " "	W/E. 30.11.80 Inv. 3968	35.70
" " " "	W/E. 23.11.80 Inv. 3955	12.75
" " " "	W/E. 21.12.80 Inv. 3992	214.20
" " " "	W/E. 11.1.81 Inv. 4425	81.60
" " " "	W/E. 31.1.81 Inv. 5146	193.80
" " " "	W/E. 18.1.81 Inv. 4479	204.00
" " " "	W/E. 25.1.81 Inv. 3997	43.35
Quality Inspection Services Ltd.	N.D.T Services Invoices Att.	131.35
	TOTAL	£1,245.70

ACC/EWT/CT

FOSTER WHEELER POWER PRODUCTS - 8-86-04801

SUB-CONTRACT WORK

CONTRACTOR & DESCRIPTION OF WORK	DATE OF WORK & INVOICE DETAILS	VALUE
PLIBRICO LINING OF BIOMASS REACTOR VESSEL	16.12.83 - CT 3756	5,828.00
DARLINGTON INSULATION 1¼" n.b. SUPER COIL	4.6.83 - 54203	406.00
BRITISH ENGINE INS. LTD. ERVICES OF ENGINEERS	19.1.83 - QD 34443/83	1,518.00
MISCELLANEOUS CONTRACTOR COSTS		6,181.87
		£13,933.87

REFERENCES

CHAPTER 1.0

[1.1] Connell, A.J.; Gasification for Chemical Manufacture; Watt Comittee on Energy: Working Group on Gasification. To be published 1987.

[1.2] Strub, A.; The Commission of the European Communities R & D Programme 'Energy From Biomass' (Keynote paper):Thermochemical Processing of Biomass; Ed., Bridgwater,A.V.;Butterworths,1984

CHAPTER 2.0

[2.1] A Survey of Biomass Gasification; Vol II-Principles of Gasification: SERI/TR-33-239, July 1979.

[2.2] Generator Gas; Golden Company: SERI; SERI/SP-33-140, January 1979.

[2.3] The Factories Act,1961; London, H.M.S.O.

[2.4] Health, Safety and Welfare in Connection with Work, and Control of Dangerous Substances and Certain Emissions into the Atmosphere. Cited as: Health and Safety at Work etc. Act,1974; London, H.M.S.O.

[2.5] Redgrave; Health and Safety in Factories Judge Ian Fife, Machin, E.A., Butterworths Shaw & Sons (1982)

[2.6] Halsbury's Statutes of England; 3rd Edition.

[2.7] Clean Air Act,1968; London, H.M.S.O.

[2.8] Radioactive Substances Act,1960; London, H.M.S.O.

[2.9] The Public Health Act,1961; London, H.M.S.O.

[2.10] The Alkali and Works Regulations Act,1951; London, H.M.S.O.

[2.11] The Petroleum (Consolidation) Act,1928; London, H.M.S.O.

[2.12] The Asbestos Regulations,1969; London, H.M.S.O.

[2.13] The Fire Precautions Act,1971; London, H.M.S.O.

[2.14] The Employment Medical Advisory Service Act,1972; London, H.M.S.O.

[2.15] IEE Regulations (Institute Electrical Engineers) 15th ed (1981). IEE, Hitchin, Herts.

[2.16] ASME Boiler and Pressure Code, Pressure Vessels sec VIII, Div I

[2.17] BS 5500: B.S.I. Catalogue, London

[2.18] Barr, R.Q.; A Review of Factors affecting the Selection of Steels for Refining and Petrochemical Applications; Climax Molybdenum Company,Greenwich, Connecticut.

[2.19] BS 1501:Part 1:1980;B.S.I. Catalogue, London

[2.20] Dunn,R.G. et al;Molybdenum's Place in the Pressure Vessel Field; Climax Molybdenum Company, 1970

[2.21] Nelson, G.A.;Welding Research Council Bulletin, 145 (1969): Interpretive Report on Effect of Hydrogen on Steel at High Pressure. Section III-Action of Hydrogen on Steel at High Temperatures and High Pressures.

[2.22] Henry Wiggin: Incoloy Alloys 800, 800H and 802

[2.23] op. cit. [2.1]

[2.24] Bridgwater, A.V.;op.cit. [1.2].

[2.25] Gibbins, J.R., Wilson, H.T.; Equilibrium Modelling - A Cheap and Effective Aid to Gasifier System Design and Analysis: I.Chem.E. Symposium Series No. 78. 12th-15th October 1982

[2.26] Yoon, H., Wei, J., and Denn, M., 1978, AIChE J, 24, 885

[2.27] Gumz, W., 1950, Gas Producers and Blast Furnaces, Wiley, New York

[2.28] Edmister, W., Perry, H., Corey, R., and Elliott, M., 1952, Trans ASME 621

[2.29] Von Fredersdorff, C., Elliott, M., 1963, Ch.20: Coal Gasification, Chemistry of Coal Utilisation (Supplementry Volume),Wiley,N.Y.(Ed.:Lowery,H.)

[2.30] Baron,R.,Porter,H.,Hammond,O.,1976-Chemical Equilibria in Carbon-Hydrogen-Oxygen Systems, MIT Press, Cambridge,Mass. USA.

[2.31] Shand,R.N.,Bridgwater,A.V.;Fuel Gas from Biomass:

Status and New Modelling Approaches. op.cit.[1.2], ch 14.

[2.32] API Technical Data Book, 1978

[2.33] Grabowski,M., op. cit. [2.1];ch 7.

[2.34] Bridgwater,A.V., op. cit. [1.2];pp 39.

[2.35] Beenackers,A.A.C.M.,van Swaaij,W.P.M.; Gasification of Biomass, A State of the Art Review. Twente University of Technology, P.O. Box 217, 7500 AE Enschede, the Netherlands.

[2.36] Bridgwater,A.V.,Double,J.M. and Earp,P.M.; Technical and Market Assessment of Biomass Gasification in the U.K., Report to E.T.S.U., Department of Energy, 1986.

[2.37] Dallas,et al;The Gasification of Wood using the Oxygen Donor Process. Series E,Vol 8, Advanced Gasification. Eds.Beenackers A.A.C.M. et al.Reidel (1986).

[2.38] Beenackers,A.A.C.M.,op.cit.[2.35]

[2.39] Lowery :op cit. [2.29]

[2.40] Reed,T.B. et al.;The SERI High Pressure Oxygen Gasifier:Proceedings, SERI Specialist Workshop, Biomass to Methanol. Tammaron, Durango (1982)

[2.41] Dubois,P.;Solar Energy in the EEC, Series E Vol 2. Paltz,W., and Grassi,G.(Eds):Reidel (1982)

[2.42] Wilson,H.T.;Solar Energy in the EEC, Series E Vol 1:Chartier,P. and Paltz,W.(Eds.):Reidel (1982)

[2.43] Wilson,H.T.:UK Patent No GB 2 150 149 B

[2.44] Chrysostome,G.,LeMasle,J.M.:op cit [2.41] p 28

[2.45] Blackadder,W.H.,Rensfelt,E.;Synthesis Gas from Wood and Peat-The MINO Process. op cit[1.2],chap 7

[2.46] Class,D.L.;Energy from Biomass and Wastes VII, IGT Conf. Orlando(1983), Paper 1.

[2.47] Beenackers,A.A.C.M., op cit [1.2] pp 113

[2.48] Mudge, L.K., et al. op cit [2.46],Paper 13.

[2.49] Schiefelbein,G.F. et al.:ACS Symp. Ser.130 (1980), Paper 2

[2.50] Wilson,H.T., op cit [2.41]

[2.51] Beenackers,A.A.C.M., van Swaay,W.; Review Paper; Advanced Gasification. Energy from Biomass, Series

E, Vol 8. D Reidel (1986)

[2.52] Ibid

[2.53] Ibid

[2.54] Ibid

[2.55] Wilson,H.T., op. cit. [2.43]

[2.56] Mudge,L., op. cit. [2.48]

[2.57] Graham,R. et al.; A Review of Biomass Gasification: Eastern Forest Products Laboratory, report OPX 221E, Ottawa (1979)

[2.58] Smith, E.L.,Reactors:Some Design Perspectives Chap. !5 ,op. cit. [1.2](see also [2.59])

[2.59] Shand, R.N. and Smith,E.L. Gasification of Biomass A Programme of Experimental Investigation and Design Studies. Final Reports No 1 and 2 . UKAEA Contract No E/5A/CON/1096/174/073. July 1984

CHAPTER 3.0

[3.1] Beenackers,A.A.C.M., op cit [2.35]

CHAPTER 4.0

[4.1] Levelton,B.H. and Association Ltd., Project C-259 (1982), ENFOR CANADA

[4.2] Proceedings of the Conference on Coal Feeding Systems, Pasadena,C ,(1977). JPL publication 77-55

[4.3] Hawrych,J.R.,High Pressure Coal Feeding Systems for Coal Conversion Plants.International Gas Research Conference, Los Angeles, CA. (1981)

[4.4] U.S. Dept. of Energy, Workshop on Critical Coal Conversion Equipment. Huntington, WV. (1980)

CHAPTER 5.0

[5.1] Warren Spring Laboratory. Cross-Flow Pyrolysis C.R,1974

[5.2] Beenackers, A.A.C.M.; op cit [2.35]

[5.3] Flanges Limited; Manufacturers Catalogue

[5.4] Flexitalic Manufacturer´s Catalogue

[5.5] BS 3580; BSI Catalogue, LONDON

[5.6] Mechanical World Handbook

[5.7] Dial, R.E; Refractories for Coal Gasification and liquefaction

[5.8] Crowley, M.S. and Wygant, J.F; Critical Ceramic Application in Fossil Fuel Processing (Am. Ceram. Soc. Bull. 52, (11), 828, 1973)

[5.9] Sadler, L.Y., et al.; Refractories for dry ash coal gasifiers; (PB85-161032/WMS, 1984 : Mater. Sci. (7th May), 260, 1985)

[5.10] Sadler, L.Y., et al.; Effects of high-pressure, high-temperature, steam-containing environments on alumina refractory concretes (Am. Ceram. Soc. Bull. 60, (7), 703, 1981)

[5.11] Kennedy, C.R. and Schlett, P.E.; Refractories for Coal Gasification. The State of the art in the U.S. (Ceramics in Advanced Technologies, ed. Krockel,H., et al, Dordrecht, 1984, p.367)

[5.12] Anon: Refractories and Insulation. Conversion to oils and their influence on refractories. Part 3. Effect of combustion products. (Ind. Heat. 45 (1), 29, 1978)

CHAPTER 6.0

[6.1] Shand,R.N. and Smith,E.L.: Gasification of Biomass :A Programme of Experimental Investigations and Design Studies. Final report no 1. Design of the Partial Oxidation Reactor(POX). UKAEA(ETSU) Contract No. E/5A/Con/1096/174/073, July 1984

[6.2] Ibid. Final report no 2. Design of the Down-Draft Reactor

[6.3] Ibid

CHAPTER 7.0

[7.1] de Zurik Valve Catalogue

[7.2] Morgan Refractories Molochite Catalogue

CHAPTER 8.0

[8.1] Brown,M.D. et.al.Environmental Design Considerations for Thermochemical Biomass Energy. Unpublished Paper for 'BIOMASS' 1987. Pacific Northwest Labs. Richland W.A. 99352

[8.2] Deleted reference

[8.3] op.cit.[8.1]

[8.4] Treyball,R.E. Mass Transfer Operations. McGraw-Hill

CHAPTER 10.0

[10.1] Henry Wiggin Catalogue Incoloy 800

[10.2] op.cit. [5.1]

[10.3] Vendor Information. The Transformer and Electrical Co Ltd., Basildon,Essex

[10.4] Kern,D.Q.;Process Heat Transfer. McGraw-Hill

[10.5] op. cit. [2.16]

[10.6] op. cit. [10.1]

[10.7] Vendor Information. Darlington Refractories Ltd

CHAPTER 11.0

[11.1] BS 1042. BSI Catalogue London

[11.2] Structural Steel Handbook

CHAPTER 13.0

[13.1] op. cit. [2.15]

[13.2] BS 5345:Part 2: BSI Catalogue 1983